Deze download wordt u gratis aangeboden door Pick-upnaalden.nl

Web	:	www.pickupnaalden.com
Email	:	info@pick-upnaalden.nl
Facebook	:	www.facebook.com/pickupnaalden
Twitter	:	twitter.com/Pickupnaalden
Google+	:	https://plus.google.com/+FCaris_pickupnaalden

PS-X55

US Model
AEP Model
UK Model
Canadian Model
E Model

STEREO TURNTABLE SYSTEM

SPECIFICATIONS

GENERAL

Power Requirements:	120 V ac, 60 Hz (US, Canadian model) 220 V ac, 50/60 Hz (AEP model) 240 V ac, 50/60 Hz (UK model) 110 – 120 V or 220 – 240 V ac adjustable, 50/60 Hz (E model)
Power Consumption:	12 W
Dimensions:	Approx. 430 (w) x 135 (h) x 375 (d) mm 17 (w) x 5 3/8 (h) x 14 7/8 (d) inches including projecting parts and controls
Weight:	Approx. 8 kg, 17 lb 10 oz (net) Approx. 9.4 kg, 20 lb 12 oz (in shipping carton)

SAFETY-RELATED COMPONENT WARNING!!

COMPONENTS IDENTIFIED BY SHADING AND MARK ⚠ ON THE SCHEMATIC DIAGRAMS, EXPLODED VIEWS AND IN THE PARTS LIST ARE CRITICAL TO SAFE OPERATION. REPLACE THESE COMPONENTS WITH SONY PARTS WHOSE PART NUMBERS APPEAR AS SHOWN IN THIS MANUAL OR IN SUPPLEMENTS PUBLISHED BY SONY.

ATTENTION AU COMPOSANT AYANT RAPPORT À LA SÉCURITÉ!

LES COMPOSANTS IDENTIFIÉS PAR UNE TRAME ET UNE MARQUE ⚠ SUR LES DIAGRAMMES SCHÉMATIQUES, LES VUES EXPLOSÉES ET LA LISTE DES PIÈCES SONT CRITIQUES POUR LA SÉCURITÉ DE FONCTIONNEMENT. NE REMPLACER CES COMPOSANTS QUE PAR DES PIÈCES SONY DONT LES NUMÉROS SONT DONNÉS DANS CE MANUEL OU DANS LES SUPPLÉMENTS PUBLIÉS PAR SONY.

TURNTABLE

Platter:	31 cm (12 1/4 inches), aluminum-alloy diecast
Motor:	Linear BSL (brushless and slotless) motor
Drive System:	Direct drive
Control System:	Crystal lock control, magnedisc servo control system
Speed:	33 1/3 rpm, 45 rpm
Starting Characteristics:	Comes to nominal speed within a half revolution (33 1/3 rpm)
Wow and Flutter:	0.02 % (WRMS) *0.025 % (WRMS) ± 0.04 % (DIN)
S/N Ratio:	78 dB (DIN-B)
Load Characteristics:	0 % up to 100 g stylus force (at lead-in groove of a record)
Speed Deviation:	Within ± 0.003 %
Automatic System:	Lead-in, return, reject, repeat, record size selection

– Continued on page 2 –

* This new measuring method concerns only the turntable assembly, including the platter. It excludes wow and flutter caused by the tonearm, the cartridge, or the record.
Measured by obtaining signal from magnetic pick-up head.

SONY®
SERVICE MANUAL

TONEARM

Type:	Statically balanced
Pivot-to-stylus Length:	216.5 mm (8 1/2 inches)
Overall Arm Length:	300 mm (11 7/8 inches)
Overhang:	16.5 mm (21/32 inches)
Tracking Error:	+3° to −1°
Stylus Force Adjustment Range:	0 – 2.5 g
Cartridge Shell Weight:	5 g
Cartridge Weight Range:	7.5 – 11.5 g
(including supplied headshell)	11 – 15 g (with extra weight)

CARTRIDGE

Type:	Moving-magnet
Frequency Response:	10 – 30,000 Hz
Channel Separation:	25 dB at 1 kHz
Output Voltage:	3 mV at 1 kHz, 5 cm/sec, 45°
Load Impedance:	50 kΩ – 100 kΩ
Tracking Force:	1.0 – 2.0 g (1.5 g recommended)
Stylus:	Sony ND-200E Elliptical (0.3 x 0.8 mil), nude diamond
Weight:	3.5 g

MODEL IDENTIFICATION

– Specification Label –

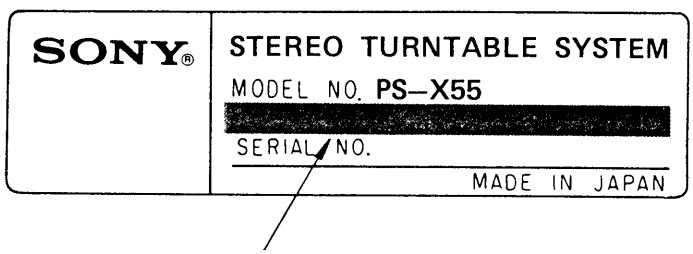

US, Canadian model	*: AC 120V*	*60Hz*	*12W*
AEP model	*: AC 220V*	*~50/60Hz*	*12W*
UK model	*: AC 240V*	*~50/60Hz*	*12W*
E model	*: AC 110–120V, 220–240V*	*~50/60Hz*	*12W*

– Power Cord –

E model: euro-plug 1-551-530-00

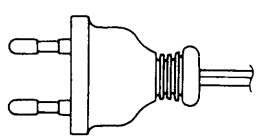

E model: parallel-blade plug 1-551-473-31

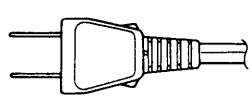

SECTION 1
OUTLINE

1-1. BLOCK DIAGRAM

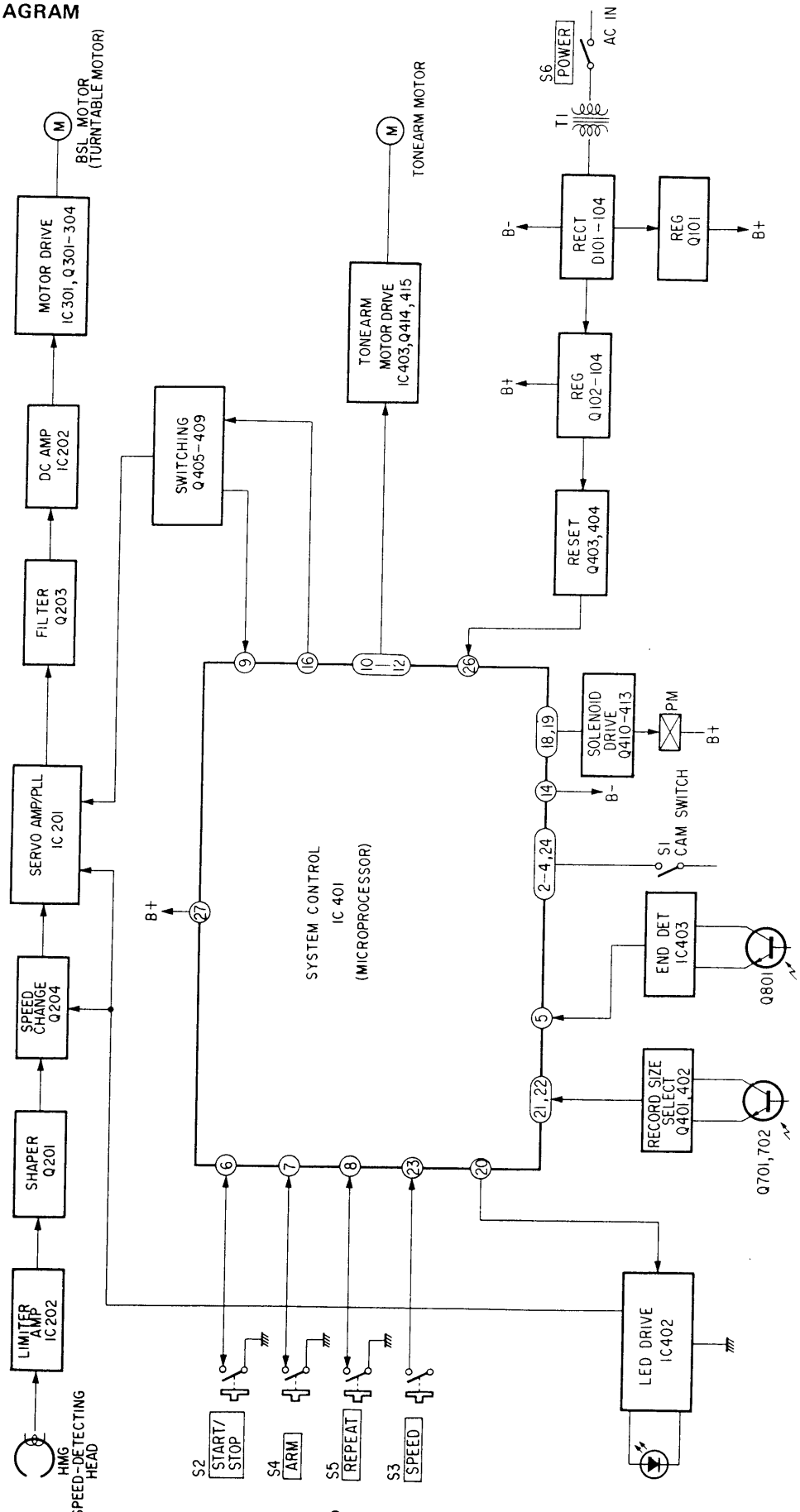

SECTION 2
DISASSEMBLY

Note: Follow the disassembly procedure in the numerical order given.

TURNTABLE/DUST COVER/BOTTOM PLATE REMOVAL

❶ : TURNTABLE
❷ : DUST COVER
❸ : BOTTOM PLATE

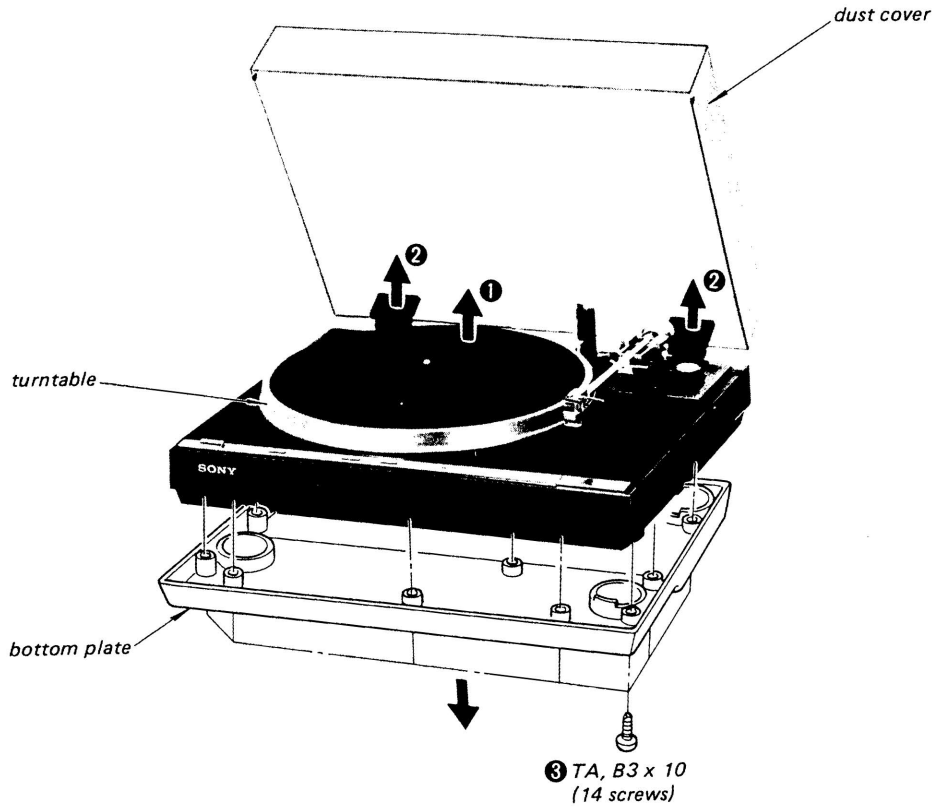

SERVICING NOTE

Bottom view of turntable

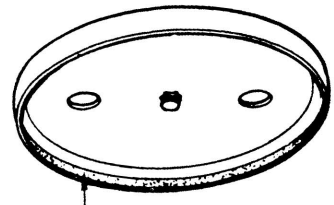

Be sure not to spoil the magnetic coating (dark brown color).

TONEARM SECTION REMOVAL

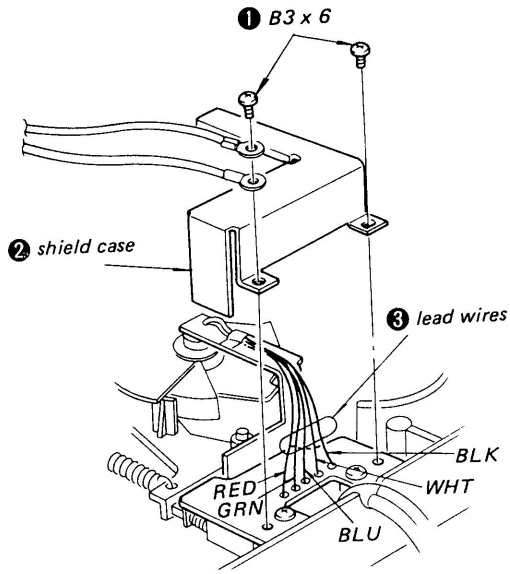

NOTE ON BRAKE DRUM INSTALLATION

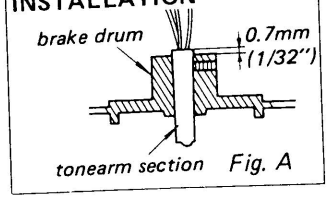

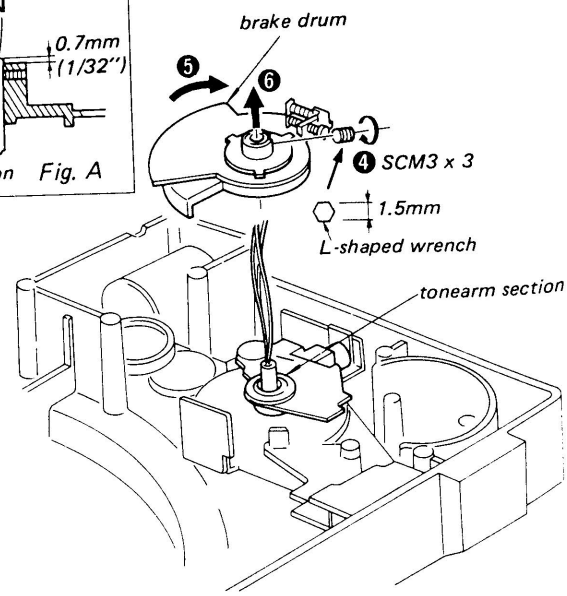

CONTROL CAM/LEAD-IN LEVER INSTALLATION

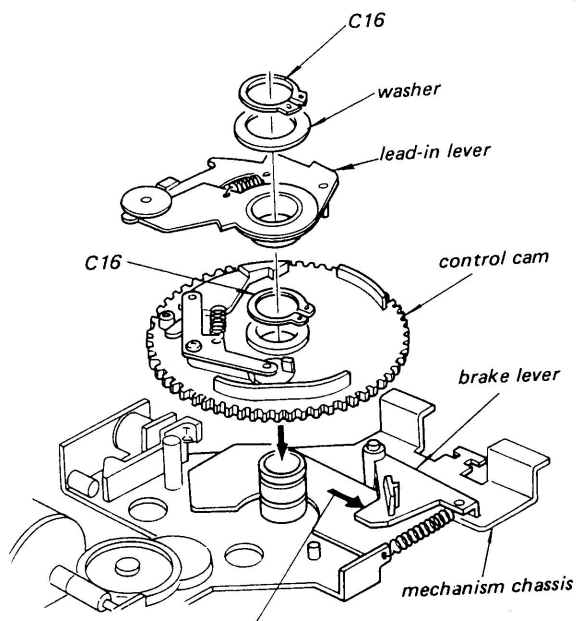

Push the brake lever and insert the control cam as shown in Fig. B.

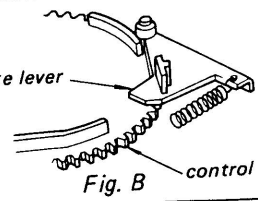

Fig. B

GEAR A/GEAR B INSTALLATION

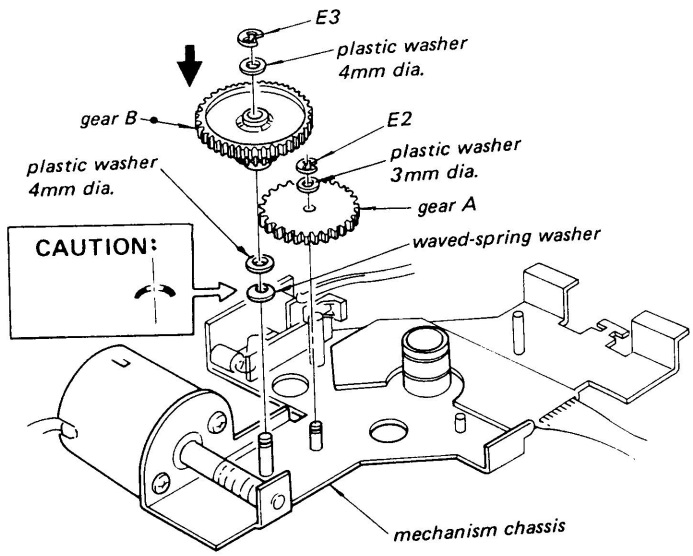

NOTE ON BRAKE DRUM INSTALLATION

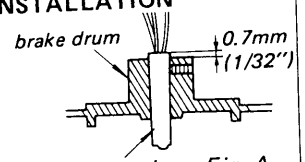

Fig. A

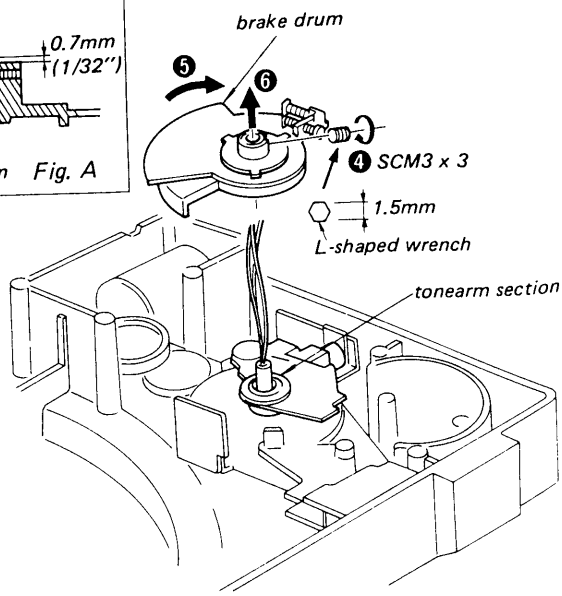

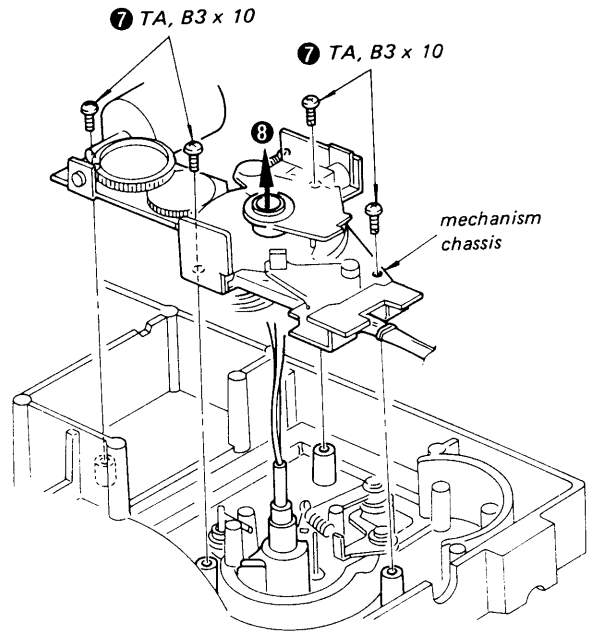

GEAR A/GEAR B INSTALLATION

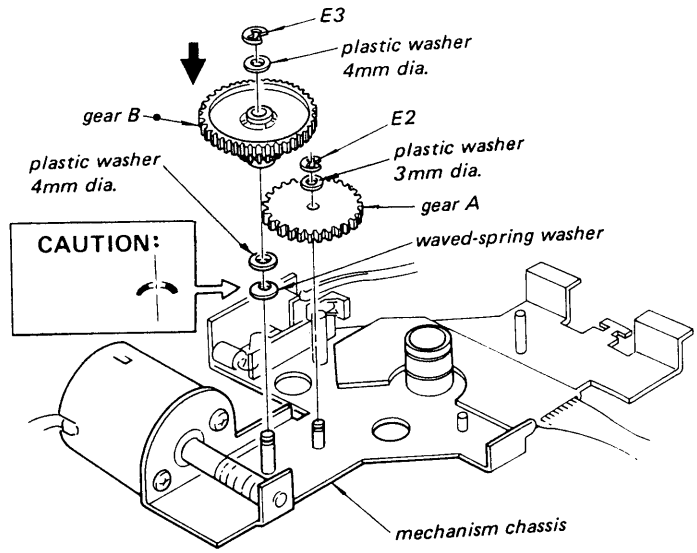

LEAD WIRE CONNECTION

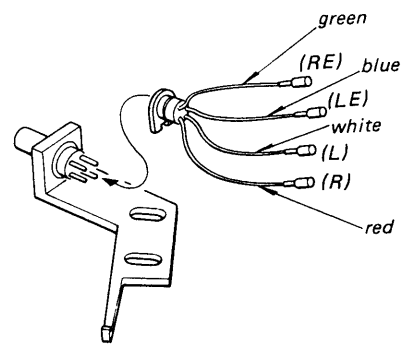

blue: left channel (ground)
white: left channel (signal)
green: right channel (ground)
red: right channel (signal)

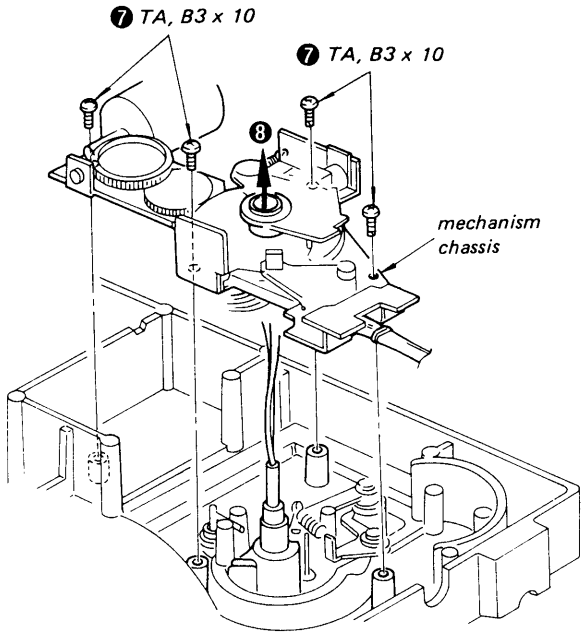

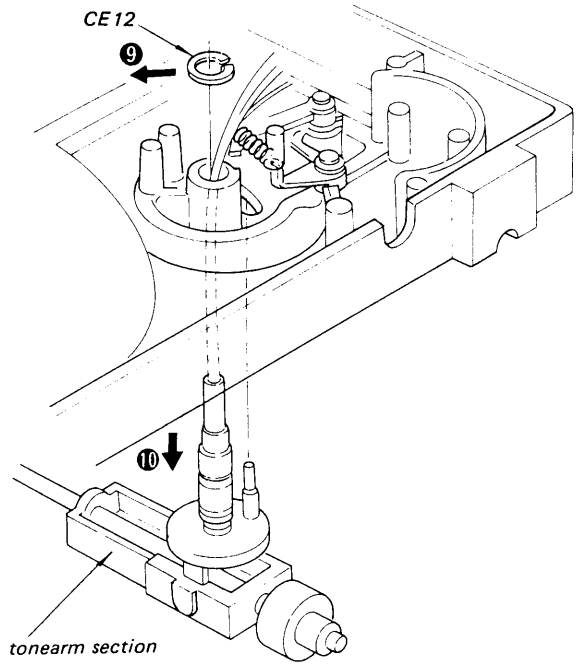

LEAD WIRE CONNECTION

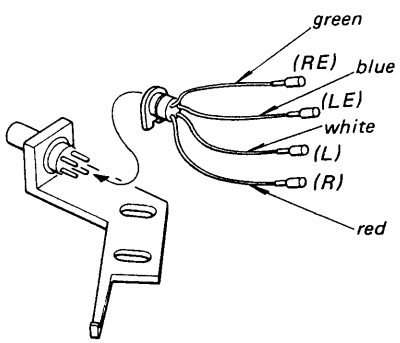

blue: left channel (ground)
white: left channel (signal)
green: right channel (ground)
red: right channel (signal)

CARTRIDGE INSTALLATION

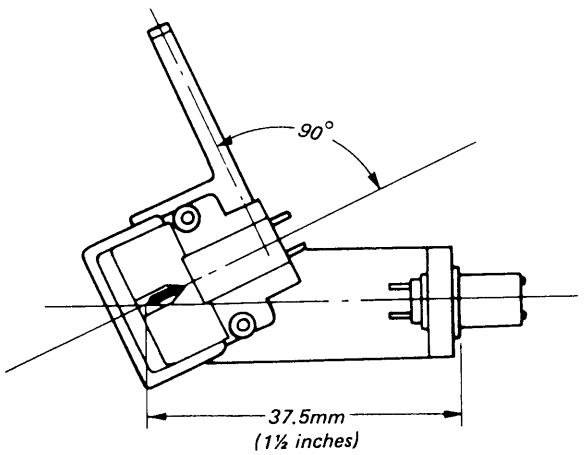

TONEARM ASSEMBLY

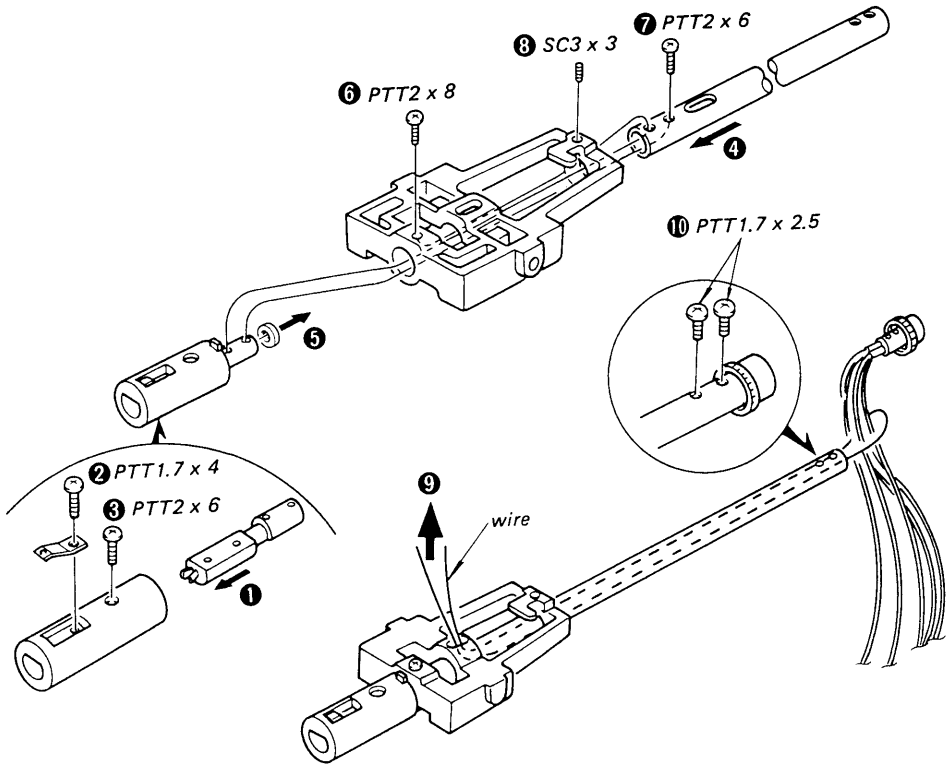

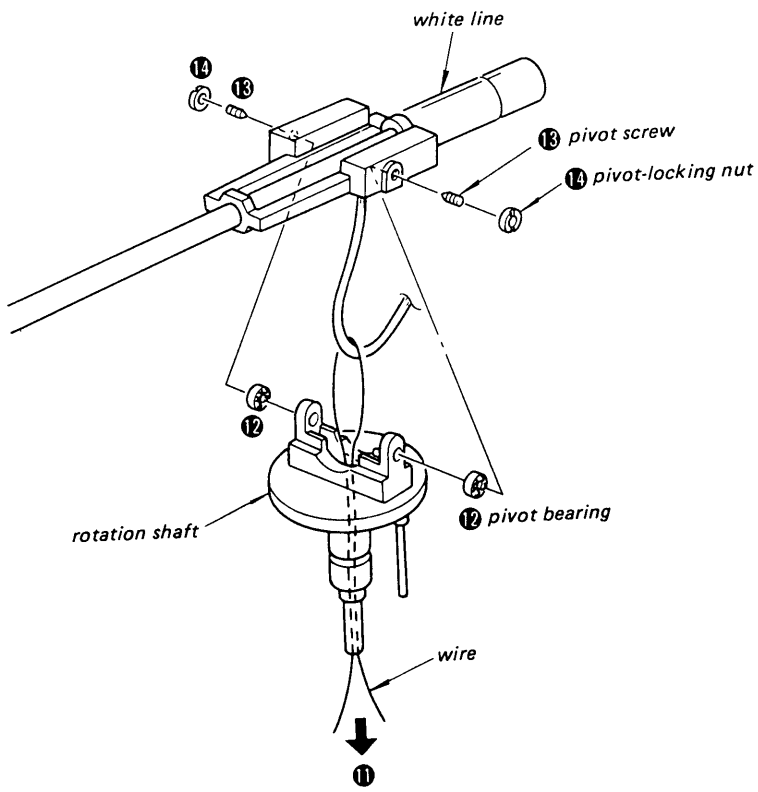

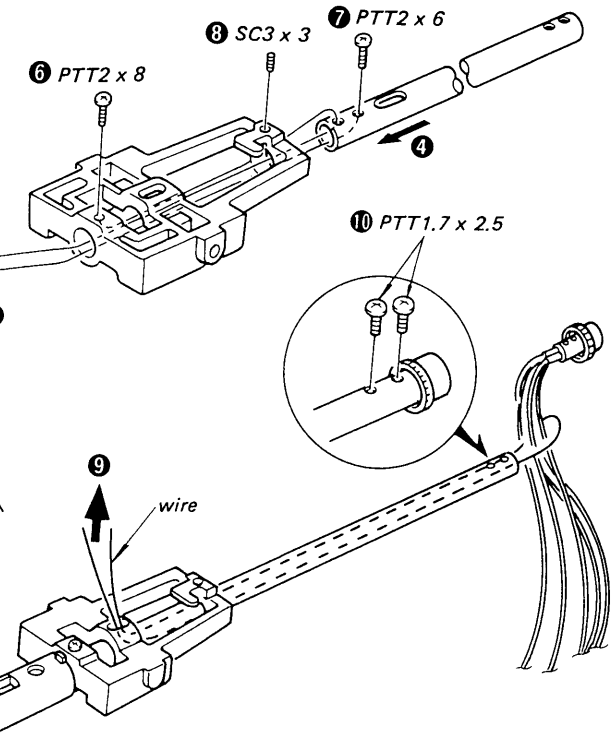

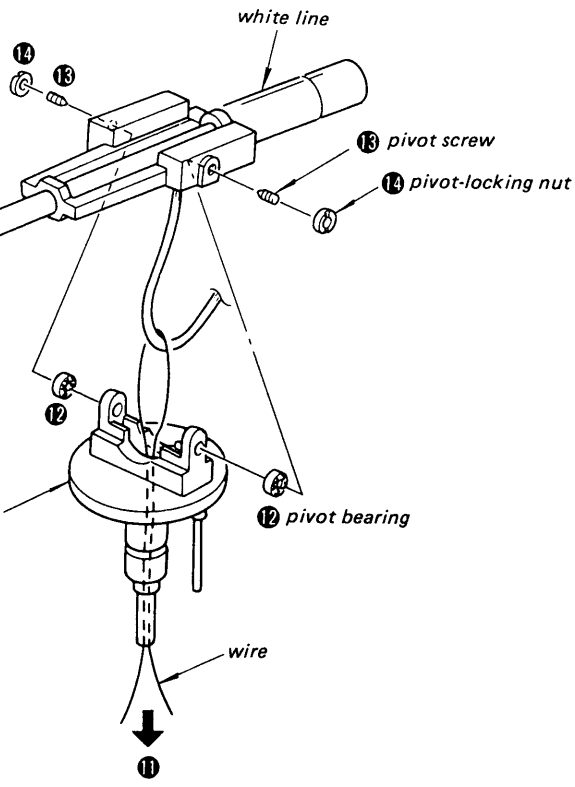

Longitudinal Sensitivity Adjustment

1. Make the longitudinal balance adjustmen tonearm.
2. Repeating the following procedures, adjust pivot screw and the pivot-locking nut.
   a. When the 70 mg weight is placed on the t the shell, the tonearm sinks more than 5 (measured at stylus-tip.)
   b. When the weight is removed, the ton returns horizontally.

Note: Rotate the left and right pivot screws by numbers of turns.

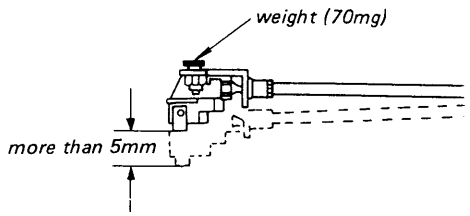

SECTION 3
ADJUSTMENTS

Longitudinal Sensitivity Adjustment

1. Make the longitudinal balance adjustment of tonearm.
2. Repeating the following procedures, adjust the pivot screw and the pivot-locking nut.
   a. When the 70 mg weight is placed on the top of the shell, the tonearm sinks more than 5 mm (measured at stylus-tip.)
   b. When the weight is removed, the tonearm returns horizontally.

Note: Rotate the left and right pivot screws by same numbers of turns.

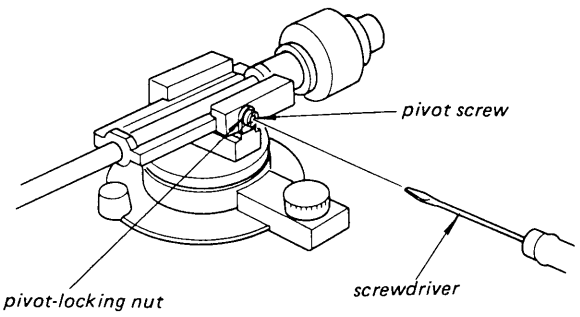

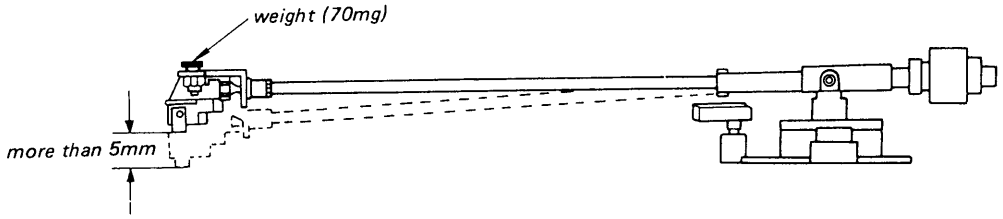

Stylus Height Adjustment

1. Bring the tonearm above the record.
2. Lift the arm lifter up and make sure that the clearance between the stylus tip and the record is 4 – 10 mm (3/16 – 13/32 inches).
3. If necessary, loosen the set screw and adjust the arm lifter height.

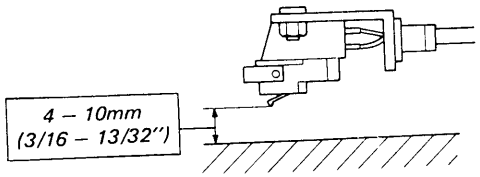

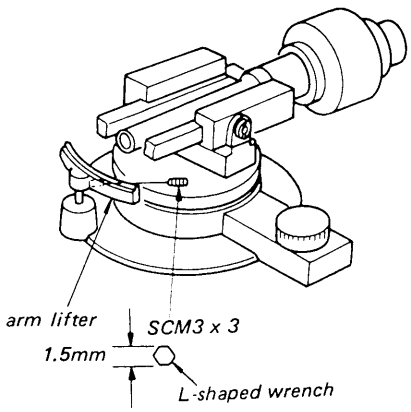

Automatic Return Position Adjustment

1. Confirm that clearance Ⓐ is 1 mm (1/32 inches) as shown below.
2. Set the SPEED to 33 rpm.
3. Set the stylus on the groove of the test record (YFSC-16).
4. Adjust the adjustment screw so that the count is 10 – 13 just when the tonearm operation indicator first lights up.

Turning direction	Count of return-point
clockwise	large figure ↑
counterclockwise	↓ small figure

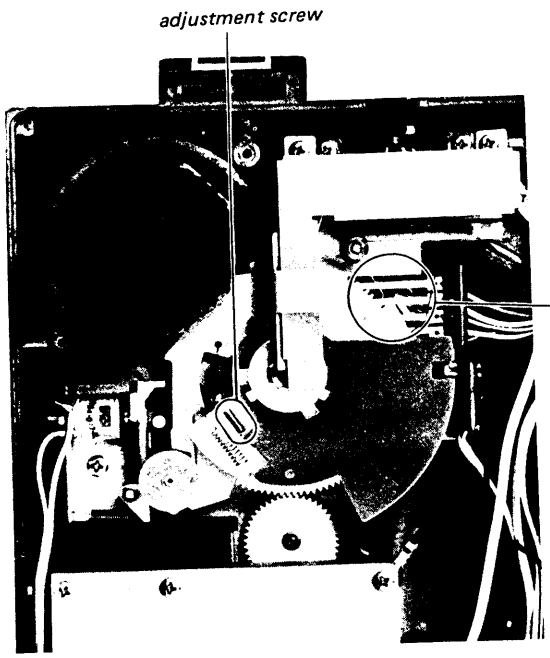

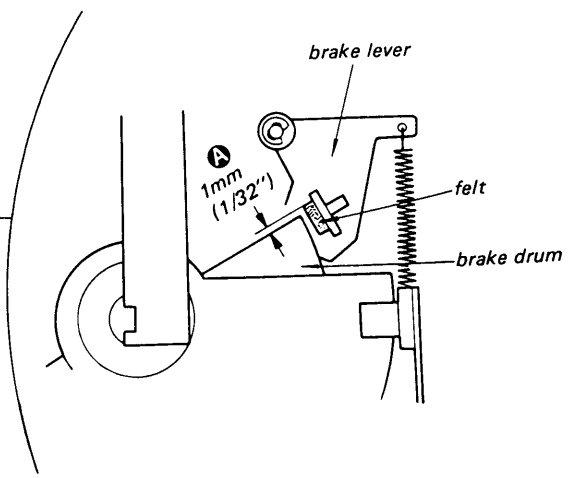

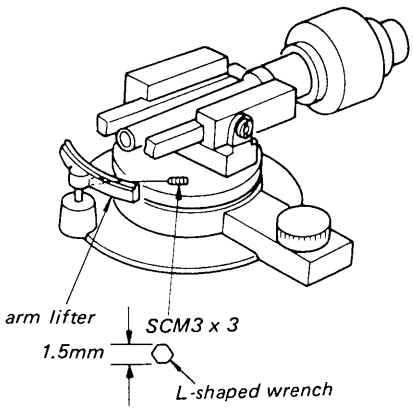

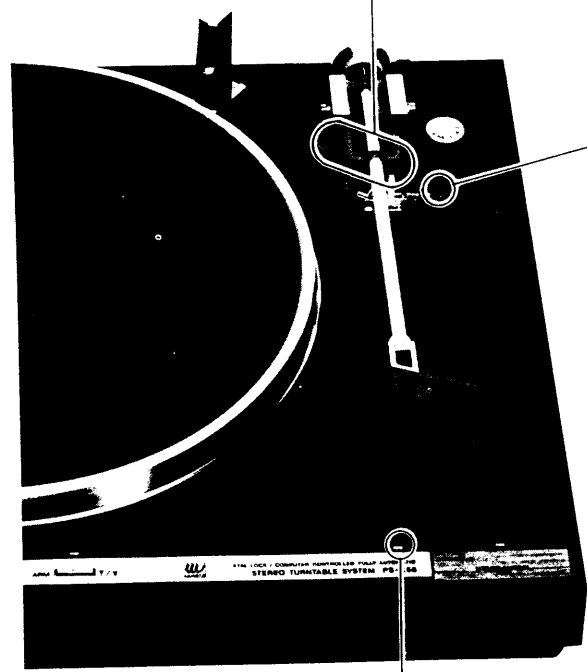

4. Adjust the adjustment screw so that the count is 10 – 13 just when the tonearm operation indicator first lights up.

Turning direction	Count of return-point
clockwise	large figure ↕ small figure
counterclockwise	

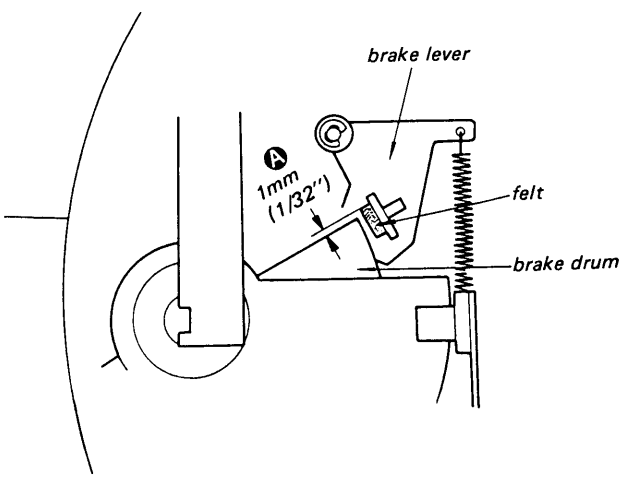

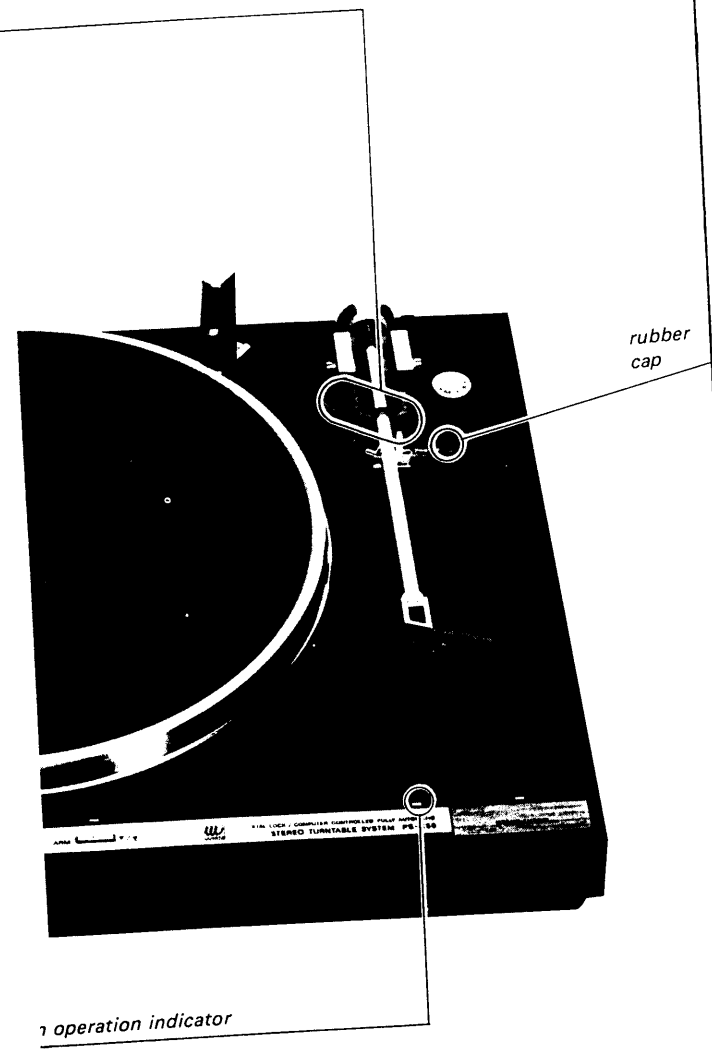

Stylus Drop-point Adjustment

1. Remove the rubber cap.
2. Make sure that the stylus drops on the specified point of the test record.
   test record: YFSC-16

Record size	Count of drop-point
30 (12″)	6 to 16
17 (7″)	14 to 31

3. If necessary, insert the screwdriver into the hole and adjust the drop-point by turning the adjustment screw.
   To change the drop-point inward:
   Turn the adjustment screw slightly clockwise. (The figure of the drop-point will be large.)
   To change the drop-point outward:
   Turn the adjustment screw slightly counter-clockwise. (The figure of the drop-point will be small.)

Note 1: Confirm that the screw groove is positioned within the range shown below.

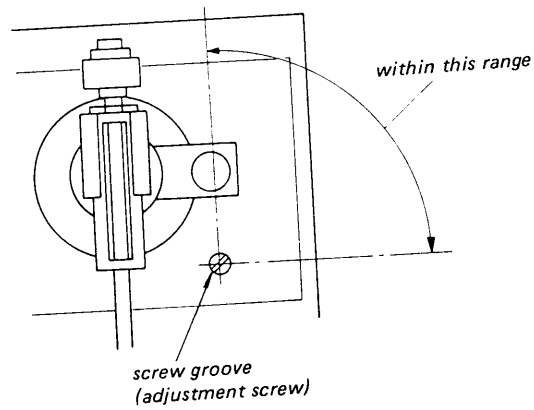

Note 2: Once it is properly adjusted with a 30 cm (12″) record, the drop-point will be correct for 17 cm (7″) records.

Hall Device Gain/Motor Amp Offset Adjustment

Setting:

POWER switch: ON
(Remove the turntable before turning the switch on.)

1. Disconnect the yellow lead wire and connect the regulated power supply as shown below.

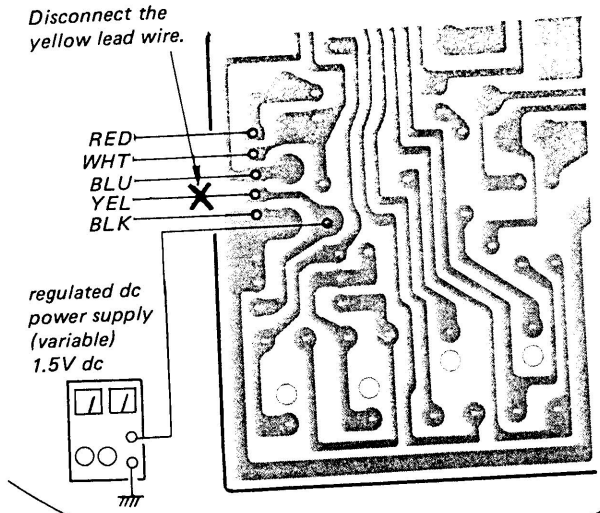

2. Connect oscilloscope to H1 and adjust RV301 for 5Vp-p reading on oscilloscope.
3. Connect oscilloscope to H2 and adjust RV302 for 5Vp-p reading on oscilloscope.
4. Connect VTVM or oscilloscope to H1 and adjust RV303 for 0V dc VTVM reading or for the waveform on oscilloscope as shown below.
5. Connect VTVM or oscilloscope to H2 and adjust RV304 for 0V dc VTVM reading or for the waveform on oscilloscope as shown below.

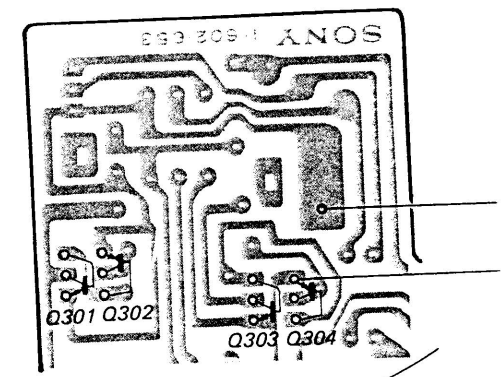

Speed Detecting Head Output Level Adjustment

Setting:

POWER switch: ON

1. Adjust the position of the head so that the VTVM reading is more than 25 mV ac at 33 1/3 rpm.
2. Make sure that the head does not touch the turntable and tighten the screws securely.

Note: The clearance between the magnet coated rim and the speed-detecting head is more than 0.3 mm.

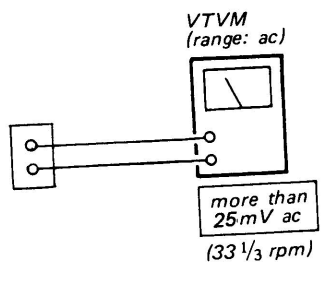

– Adjustment Location –

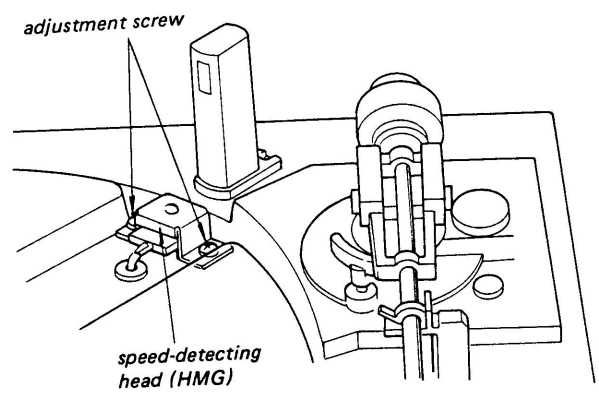

Adjustment

ng the switch

and connect
shown below.

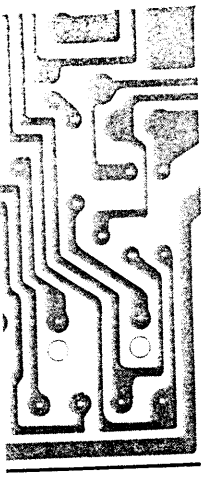

2. Connect oscilloscope to H1 and adjust RV301 for 5Vp-p reading on oscilloscope.
3. Connect oscilloscope to H2 and adjust RV302 for 5Vp-p reading on oscilloscope.
4. Connect VTVM or oscilloscope to H1 and adjust RV303 for 0V dc VTVM reading or for the waveform on oscilloscope as shown below.
5. Connect VTVM or oscilloscope to H2 and adjust RV304 for 0V dc VTVM reading or for the waveform on oscilloscope as shown below.

Waveform on Oscilloscope:

Note: Set the sweep time longer for easy waveform checking.

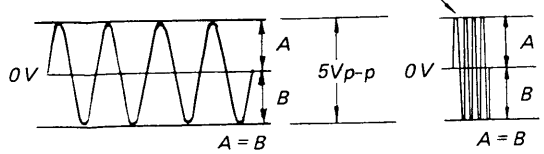

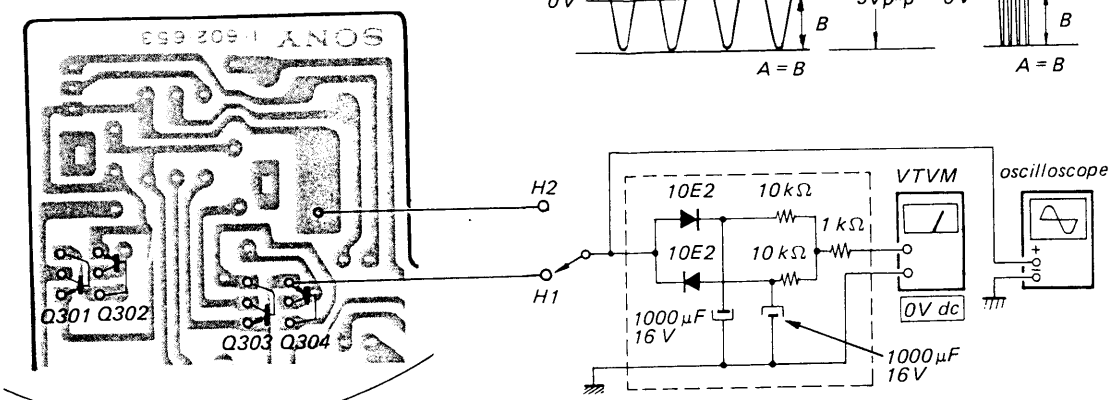

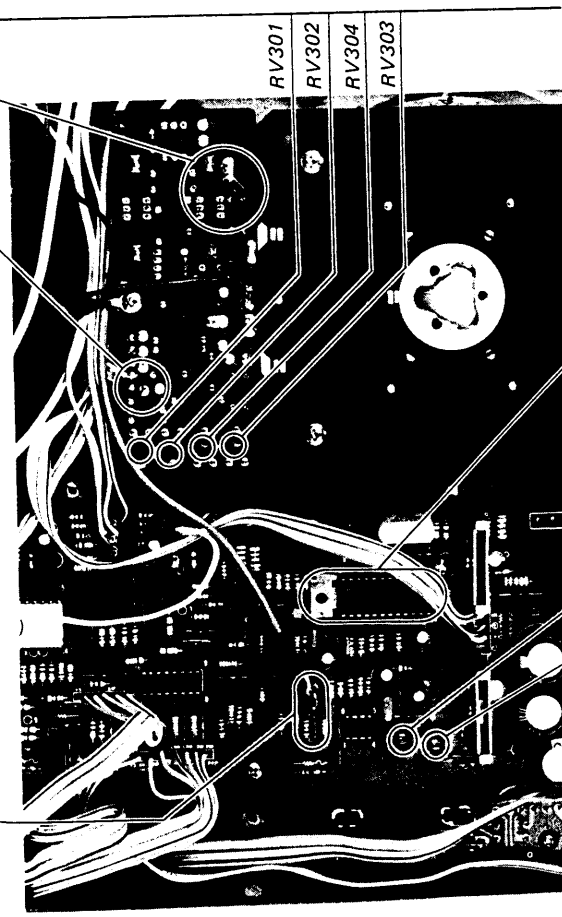

ıstment

— Adjustment Location —

ıt the VTVM
3 rpm.
ıch the turn-

oated rim and
n 0.3 mm.

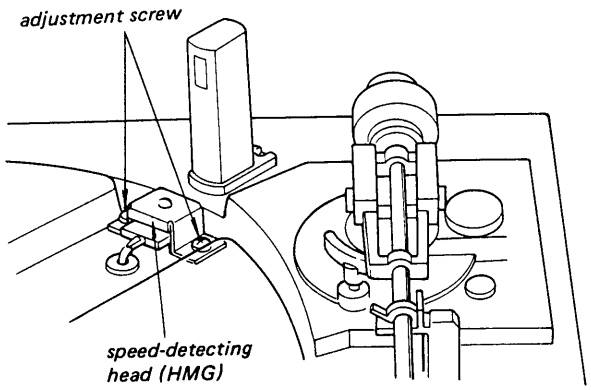

Waveform on Oscilloscope:

Note: Set the sweep time longer for easy waveform checking.

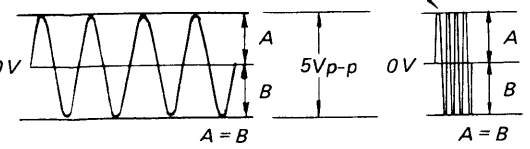

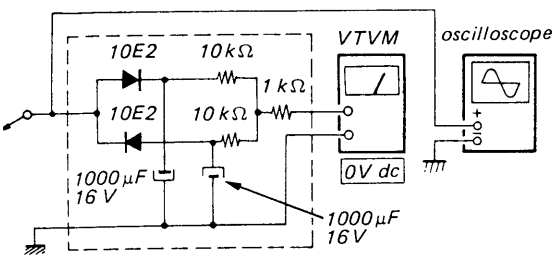

Speed Adjustment

Setting:

POWER switch: ON

1. Set the SPEED to 45 rpm.
2. Adjust RV202 for specified waveform as shown on the oscilloscope.

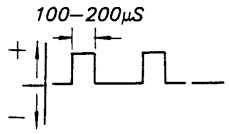

Note: The waveform should appear to positive side.

3. Set the SPEED to 33 rpm.
4. Adjust RV201 for specified waveform as shown on the oscilloscope.

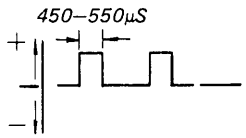

Note: The waveform should appear to positive side.

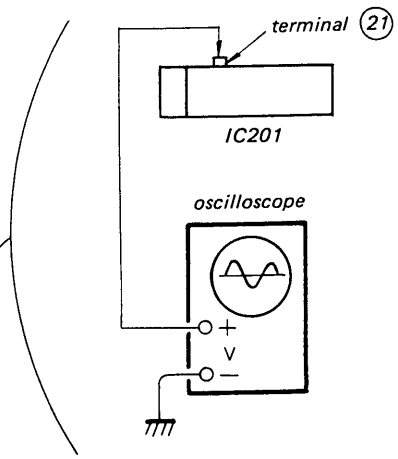

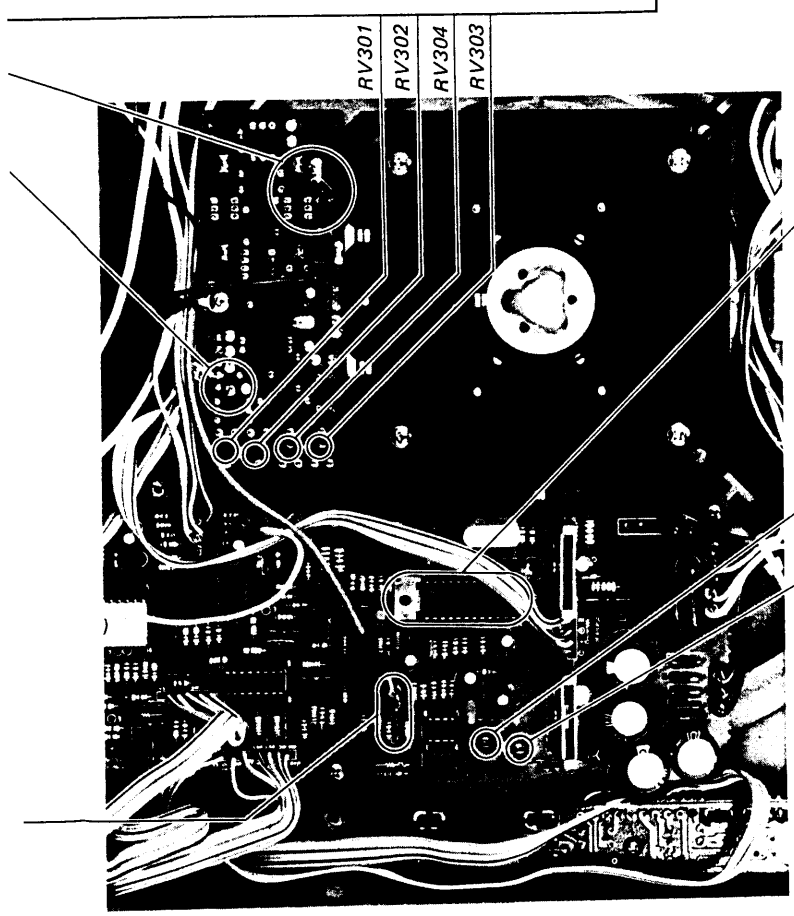

fied waveform as shown

e: The waveform should appear to positive side.

fied waveform as shown

te: The waveform should appear to positive side.

terminal (21)

IC201

lloscope

1

IC401

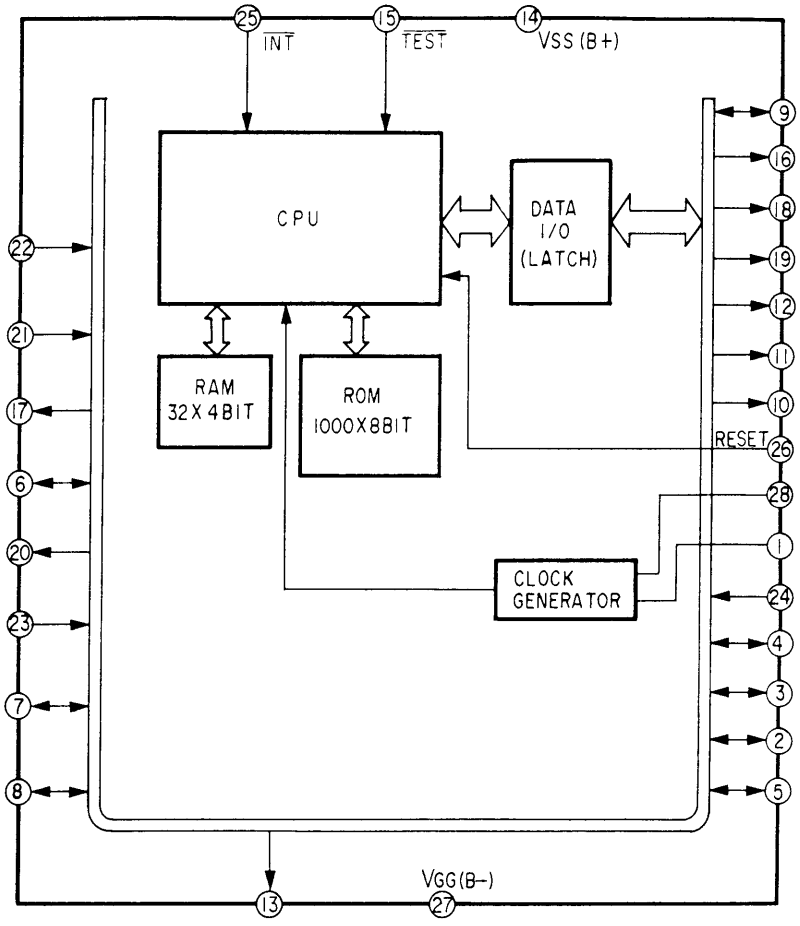

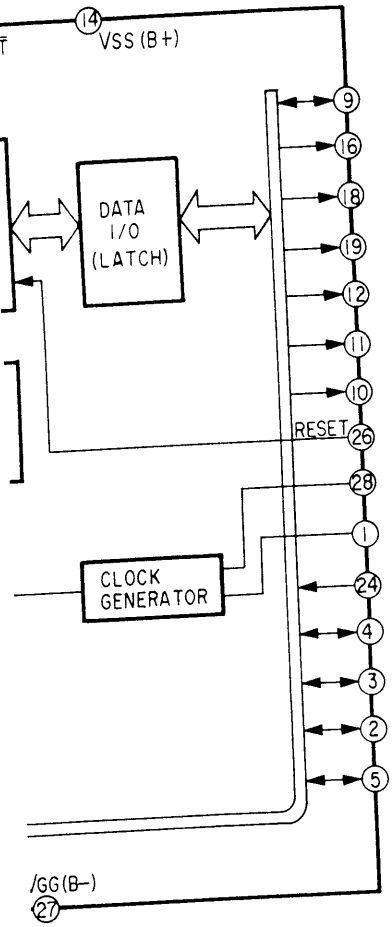
14
VSS (B+)
9
16
18
19
12
11
10
DATA
I/O
(LATCH)
RESET
26
28
1
CLOCK
GENERATOR
24
4
3
2
5
/GG(B-)
27

SECTION 4
DIAGRAMS

Note:

- All capacitors are in μF unless otherwise noted. pF : μμF 50WV or less are not indicated except for electrolytics and tantalums.
- All resistors are in ohms, ¼W unless otherwise noted. kΩ : 1000Ω, MΩ : 1000kΩ
- ⏦ : fusible resistor.
- ▭ : adjustment for repair.
- ——— : B+ bus.
- – – – : B– bus.
- Voltages are dc with respect to ground unless otherwise noted.
- Readings are taken with a VOM (20kΩ/V).
  no mark: When the POWER switch (S6) is "ON" and the tonearm is on the arm rest.
- Voltage variations may be noted due to normal production tolerances.
- Switch

Ref. No.	Switch	Position
S1	CAM SWITCH	OFF
S2	START/STOP	OFF
S3	SPEED	OFF
S4	ARM	OFF
S5	REPEAT	OFF
S6	POWER	OFF
S7	MUTING	STOP

- ※ : R438

US model: serial No. up to 801,000 AEP model: serial No. up to 501,100 UK model: serial No. up to 601,000	10kΩ
US model: serial No. 801,001 and later AEP model: serial No. 501,101 and later UK model: serial No. 601,001 and later Canadian model E model	deleted

Note: The components identified by shading and mark ⚠ are critical for safety. Replace only with part number specified.

Note: Les composants identifiés par une trame et une marque ⚠ sont critiques pour la sécurité. Ne les remplacer que par une pièce portant le numéro spécifié.

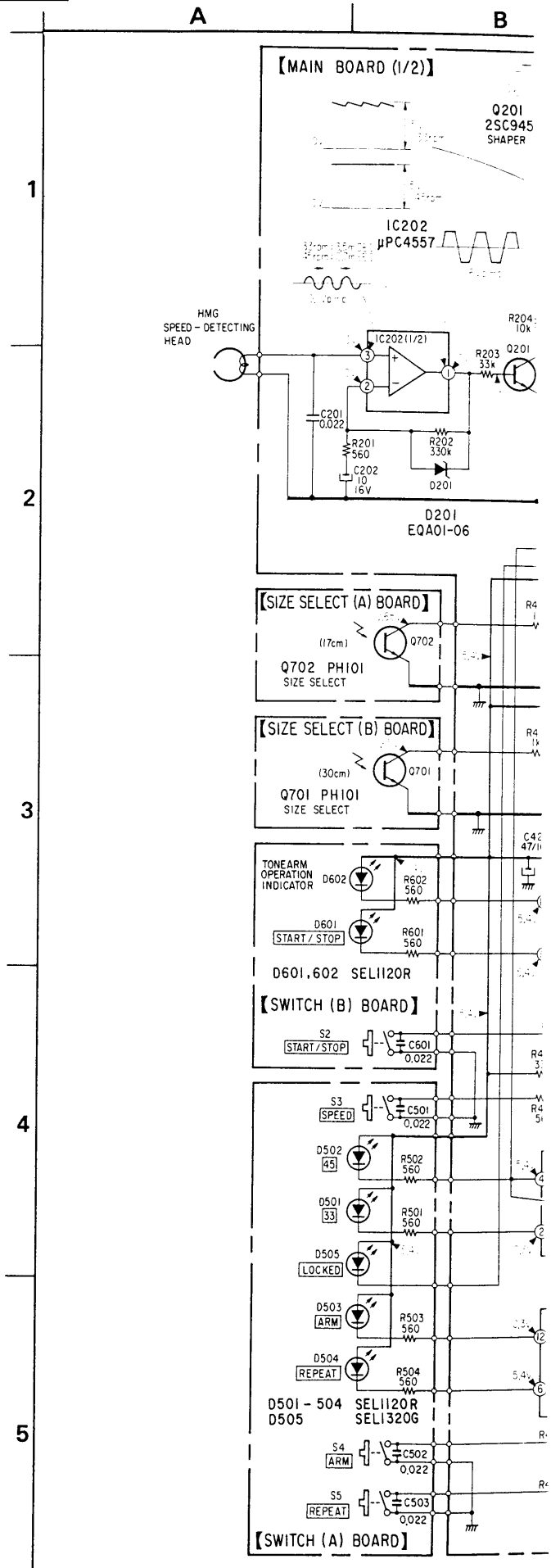

4-1. SCHEMATIC DIAGRAM

See page 13 for IC401 block diagram.

A | B | C | D

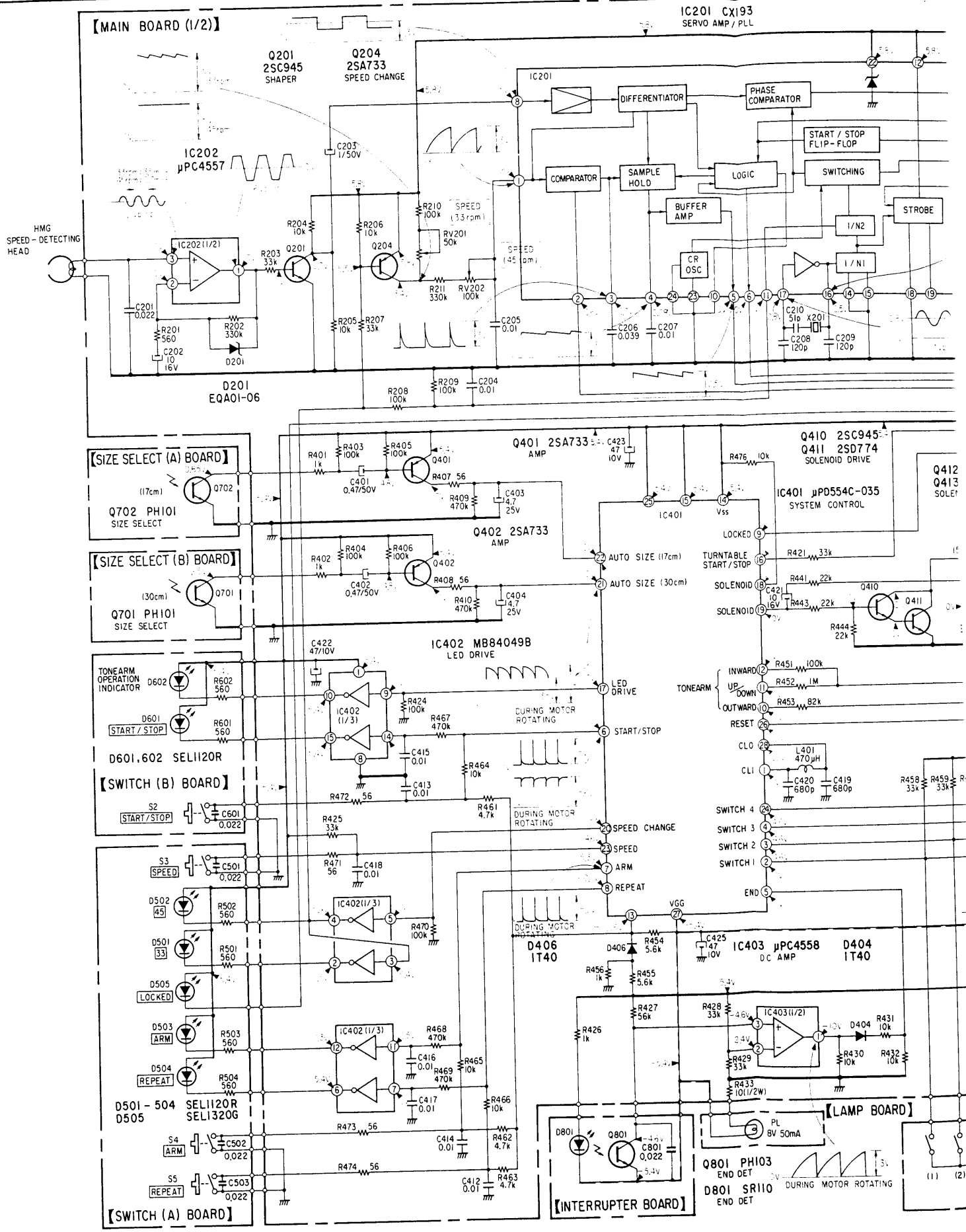

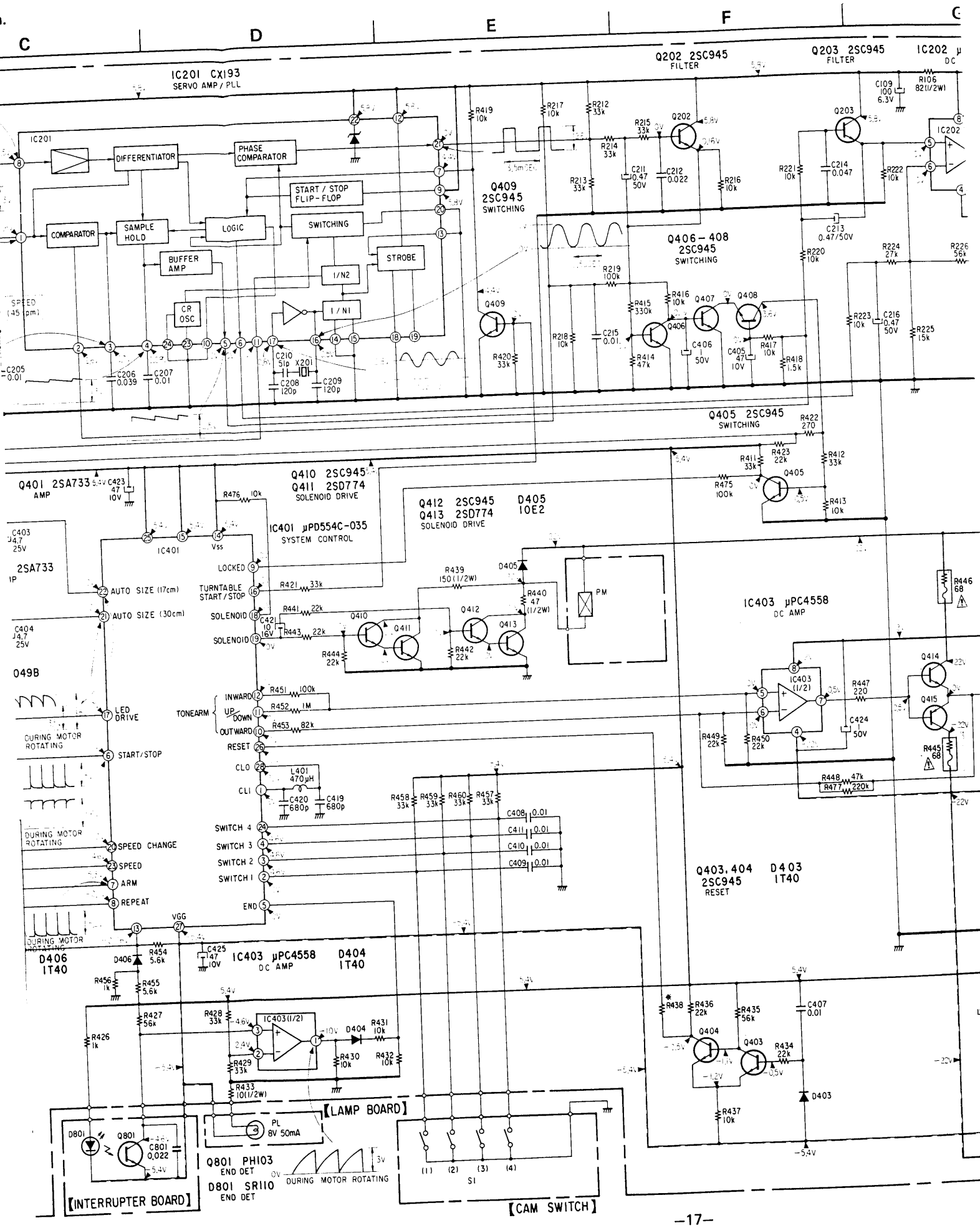

C
D
E
F
IC201 CX193
SERVO AMP / PLL
IC201
DIFFERENTIATOR
PHASE COMPARATOR
START / STOP FLIP-FLOP
COMPARATOR
SAMPLE HOLD
LOGIC
SWITCHING
BUFFER AMP
STROBE
1/N2
CR OSC
1/N1
SPEED (45 rpm)
Q202 2SC945
FILTER
Q203 2SC945
FILTER
IC202
Q409
2SC945
SWITCHING
Q406-408
2SC945
SWITCHING
Q405 2SC945
SWITCHING
Q401 2SA733
AMP
Q410 2SC945
Q411 2SD774
SOLENOID DRIVE
Q412 2SC945
Q413 2SD774
SOLENOID DRIVE
D405
10E2
IC401 μPD554C-035
SYSTEM CONTROL
IC401
Vss
LOCKED
TURNTABLE START/STOP
SOLENOID
SOLENOID
AUTO SIZE (17cm)
AUTO SIZE (30cm)
LED DRIVE
DURING MOTOR ROTATING
START/STOP
SPEED CHANGE
SPEED
ARM
REPEAT
TONEARM
INWARD
UP
DOWN
OUTWARD
RESET
CLO
CLI
SWITCH 4
SWITCH 3
SWITCH 2
SWITCH 1
END
VGG
PM
IC403 μPC4558
DC AMP
IC403 (1/2)
Q403, 404
2SC945
RESET
D403
1T40
D406
1T40
IC403 μPC4558
DC AMP
D404
1T40
IC403 (1/2)
【LAMP BOARD】
PL
8V 50mA
Q801 PH103
END DET
D801 SR110
END DET
DURING MOTOR ROTATING
【INTERRUPTER BOARD】
【CAM SWITCH】
S1

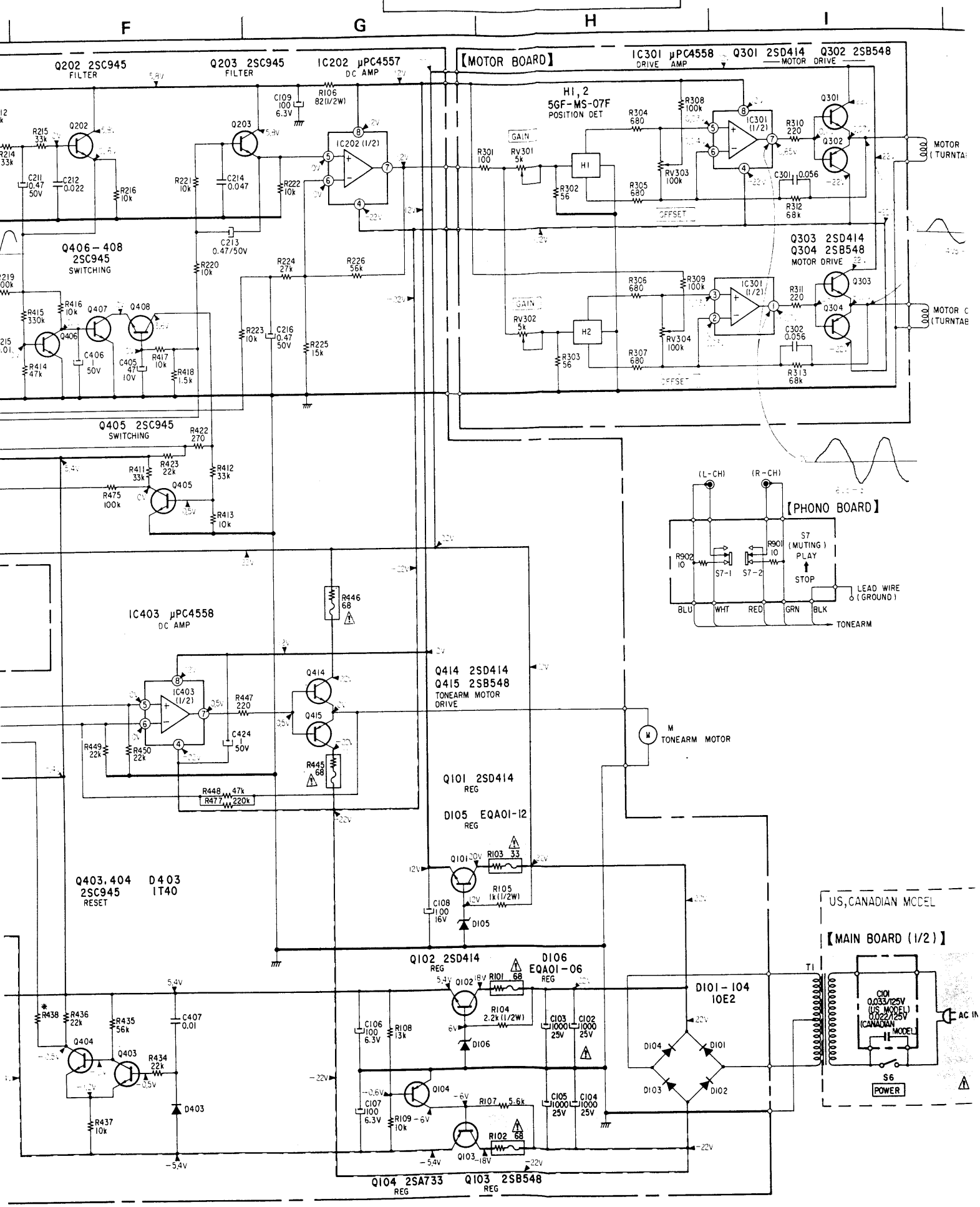
F
G
H
I
Q202 2SC945
FILTER
Q203 2SC945
FILTER
IC202 μPC4557
DC AMP
【MOTOR BOARD】
IC301 μPC4558
DRIVE AMP
Q301 2SD414
Q302 2SB548
MOTOR DRIVE
H1, 2
5GF-MS-07F
POSITION DET
GAIN
OFFSET
Q303 2SD414
Q304 2SB548
MOTOR DRIVE
Q406-408
2SC945
SWITCHING
Q405 2SC945
SWITCHING
【PHONO BOARD】
(L-CH)
(R-CH)
S7
(MUTING)
PLAY
STOP
LEAD WIRE
(GROUND)
BLU
WHT
RED
GRN
BLK
TONEARM
IC403 μPC4558
DC AMP
Q414 2SD414
Q415 2SB548
TONEARM MOTOR
DRIVE
M
TONEARM MOTOR
Q101 2SD414
REG
D105 EQA01-12
REG
Q403,404 D403
2SC945 1T40
RESET
Q102 2SD414
REG
D106
EQA01-06
REG
D101-104
10E2
US,CANADIAN MODEL
【MAIN BOARD (1/2)】
T1
C101
0.033/125V
(US MODEL)
0.022/125V
(CANADIAN MODEL)
AC IN
S6
POWER
Q104 2SA733
REG
Q103 2SB548
REG

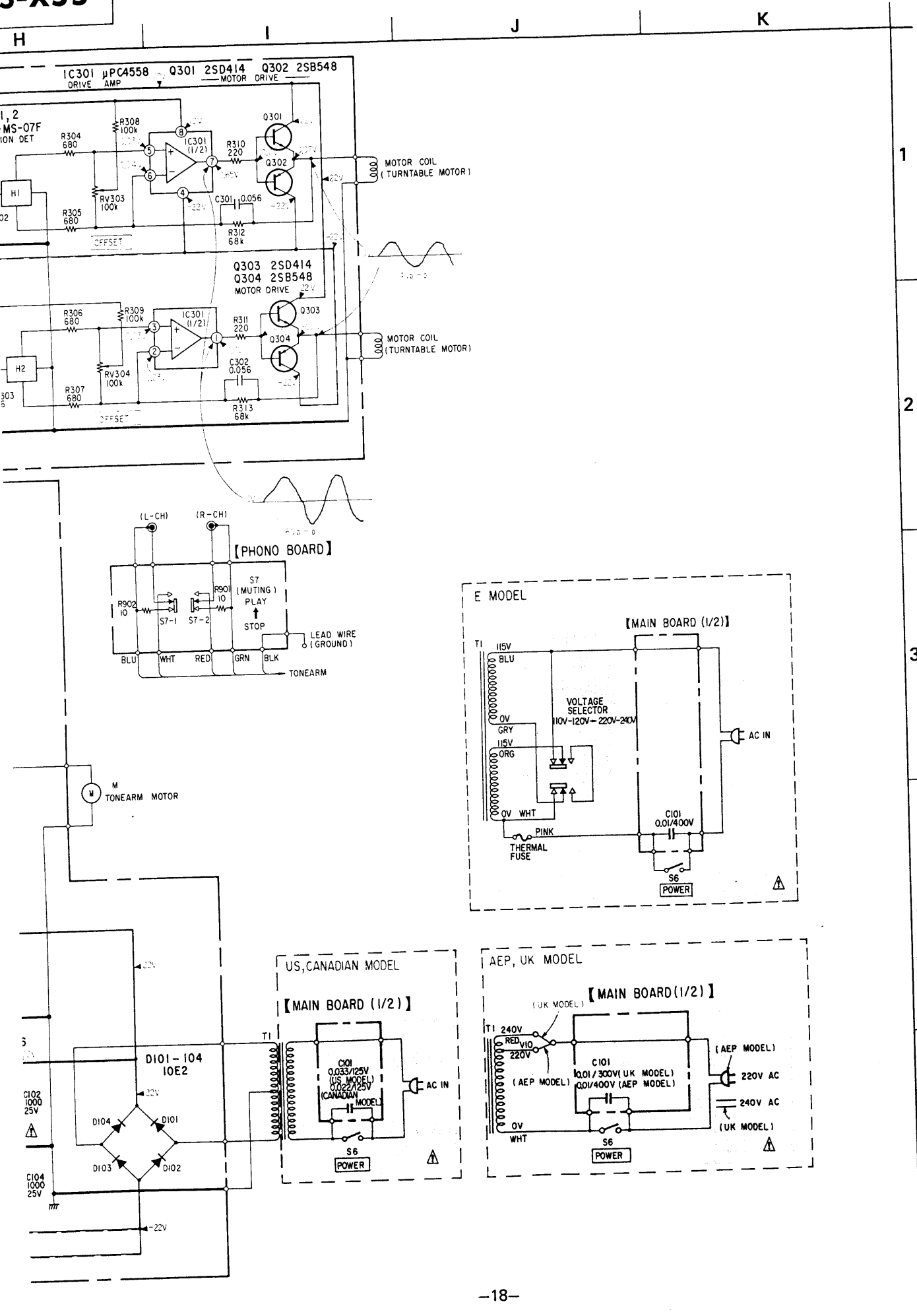
H
I
J
K
1
2
3
4
5
IC301 μPC4558 DRIVE AMP
Q301 2SD414 Q302 2SB548 MOTOR DRIVE
Q303 2SD414 Q304 2SB548 MOTOR DRIVE
MOTOR COIL (TURNTABLE MOTOR)
MOTOR COIL (TURNTABLE MOTOR)
OFFSET
【PHONO BOARD】
(L-CH)
(R-CH)
S7 (MUTING) PLAY STOP
S7-1
S7-2
LEAD WIRE (GROUND)
BLU
WHT
RED
GRN
BLK
TONEARM
M TONEARM MOTOR
E MODEL
【MAIN BOARD (1/2)】
115V
BLU
0V
GRY
115V
ORG
0V WHT
VOLTAGE SELECTOR 110V-120V-220V-240V
AC IN
C101 0.01/400V
PINK
THERMAL FUSE
S6
POWER
US,CANADIAN MODEL
【MAIN BOARD (1/2)】
C101 0.033/125V (US MODEL) 0.022/125V (CANADIAN MODEL)
AC IN
S6
POWER
AEP, UK MODEL
【MAIN BOARD(1/2)】
(UK MODEL)
240V
RED
VIO
220V
(AEP MODEL)
C101 0.01/300V(UK MODEL) 0.01/400V (AEP MODEL)
(AEP MODEL)
220V AC
240V AC
(UK MODEL)
0V
WHT
S6
POWER
D101-104 10E2
D104
D101
D103
D102
C102 1000 25V
C104 1000 25V
-22V

4-2. MOUNTING DIAGRAM – *Conductor Side* –

See page 25 for the replacement semiconductors.

	A	B	C	D
Q, IC		IC403, IC401, 415, 414, 403, 404, 401, 801	IC402, 702, 402, 701, 411, 410, 412, 413	201, 405, 408, 407, 406, 409, 202, IC202
D		404, 601, 403, 406, 801	602, 503, 405	201, 504

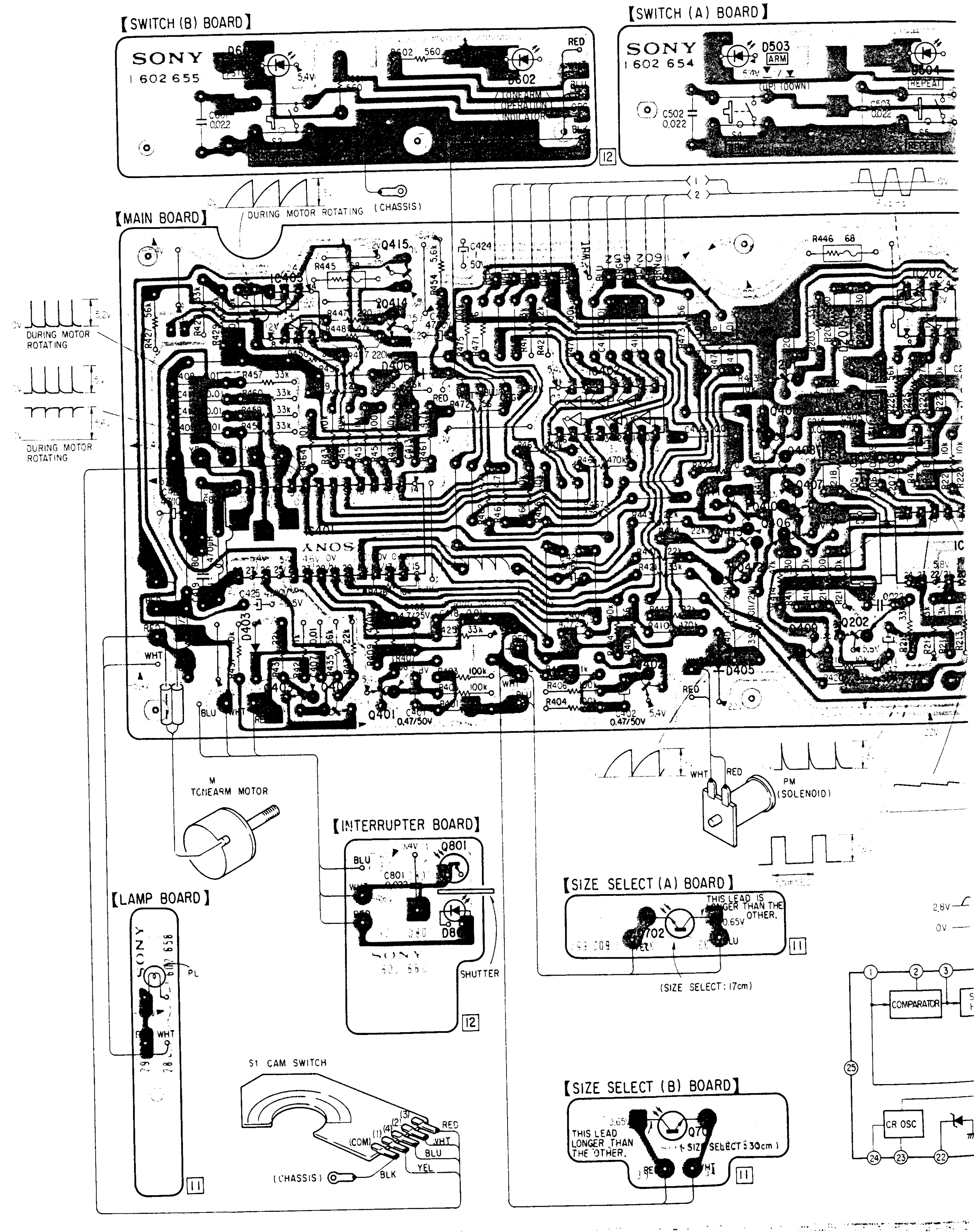

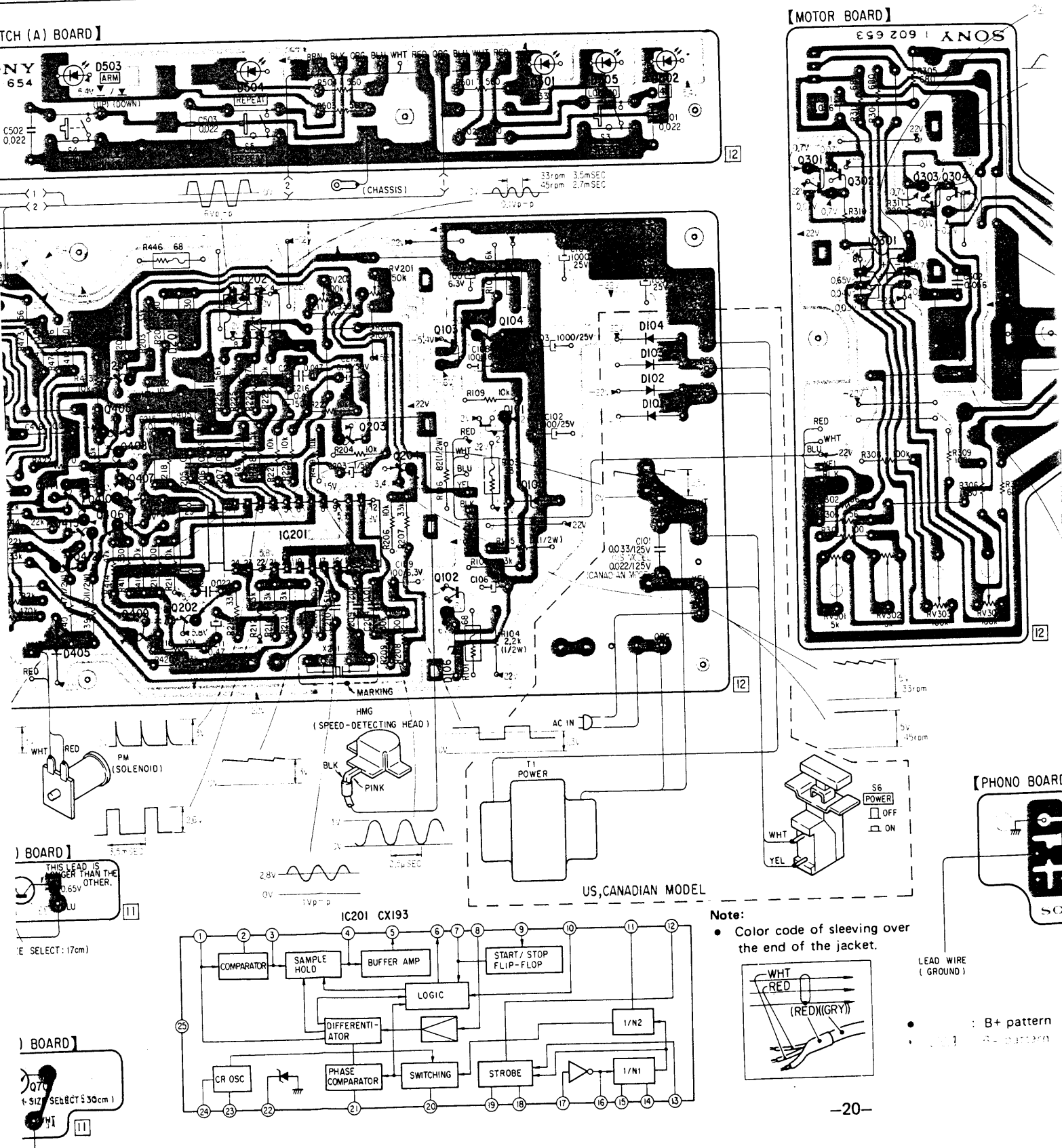

Note:

- Color code of sleeving over the end of the jacket.
- : B+ pattern

US model (Serial No. 801,001 and later)
AEP model (Serial No. 501,101 and later)
UK model (Serial No. 601,001 and later)
Canadian model
E model

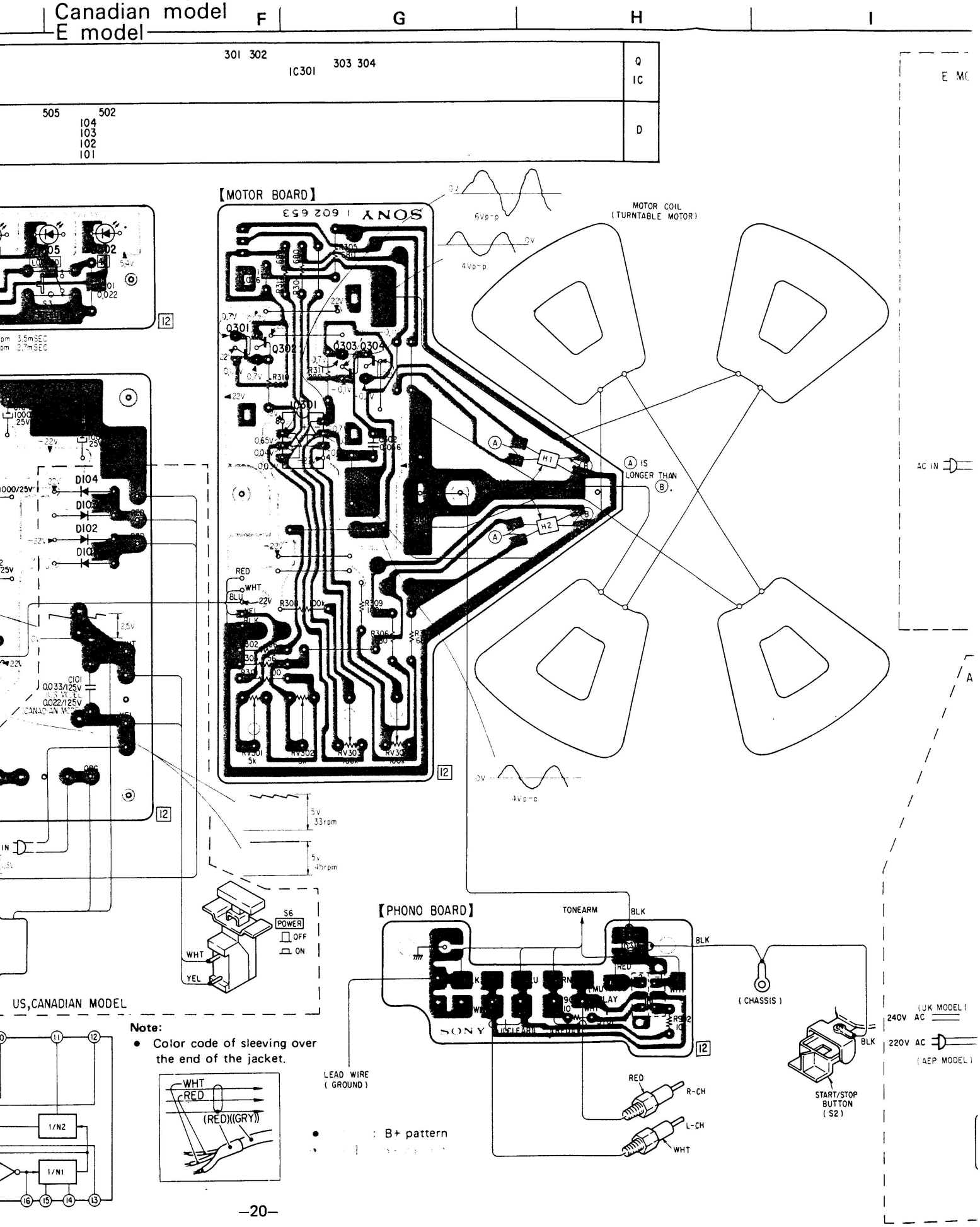

Note:

- Color code of sleeving over the end of the jacket.

- : B+ pattern

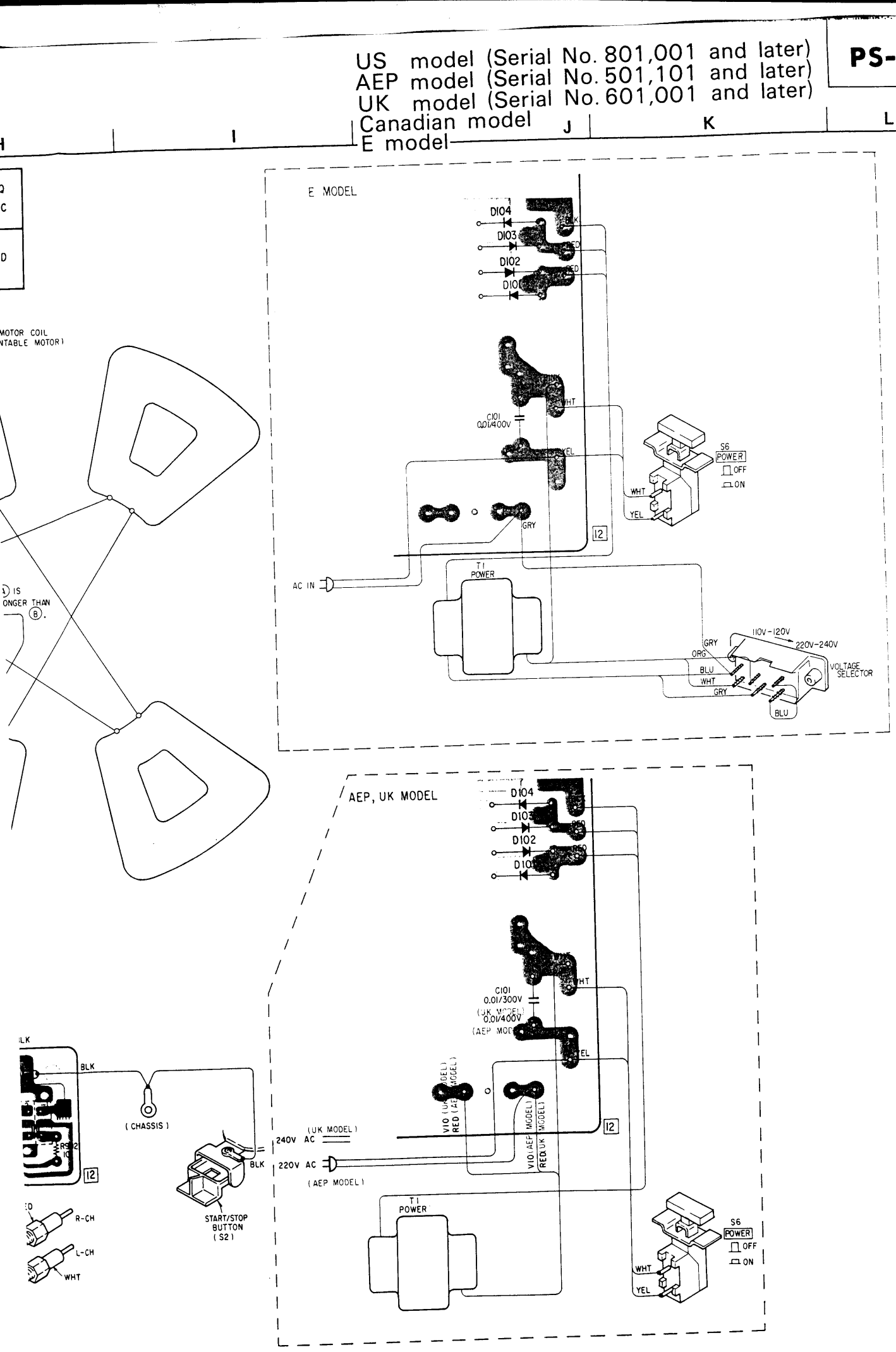
E MODEL
D104
D103
D102
D101
C101
0.01/400V
S6
POWER
OFF
ON
WHT
YEL
GRY
12
AC IN
T1
POWER
110V-120V
220V-240V
GRY
ORG
BLU
WHT
GRY
VOLTAGE SELECTOR
BLU
AEP, UK MODEL
D104
D103
D102
D101
C101
0.01/300V
(UK MODEL)
0.01/400V
(AEP MODEL)
WHT
YEL
VIO (UK MODEL)
RED (AEP MODEL)
VIO (AEP MODEL)
RED (UK MODEL)
12
240V AC (UK MODEL)
220V AC (AEP MODEL)
T1
POWER
S6
POWER
OFF
ON
WHT
YEL
BLK
(CHASSIS)
BLK
START/STOP
BUTTON
(S2)
R-CH
L-CH
WHT
MOTOR COIL
NTABLE MOTOR)
IS
ONGER THAN
B.

4-3. MOUNTING DIAGRAM — *Conductor Side* —

See page 25 for the replacement semiconductors.

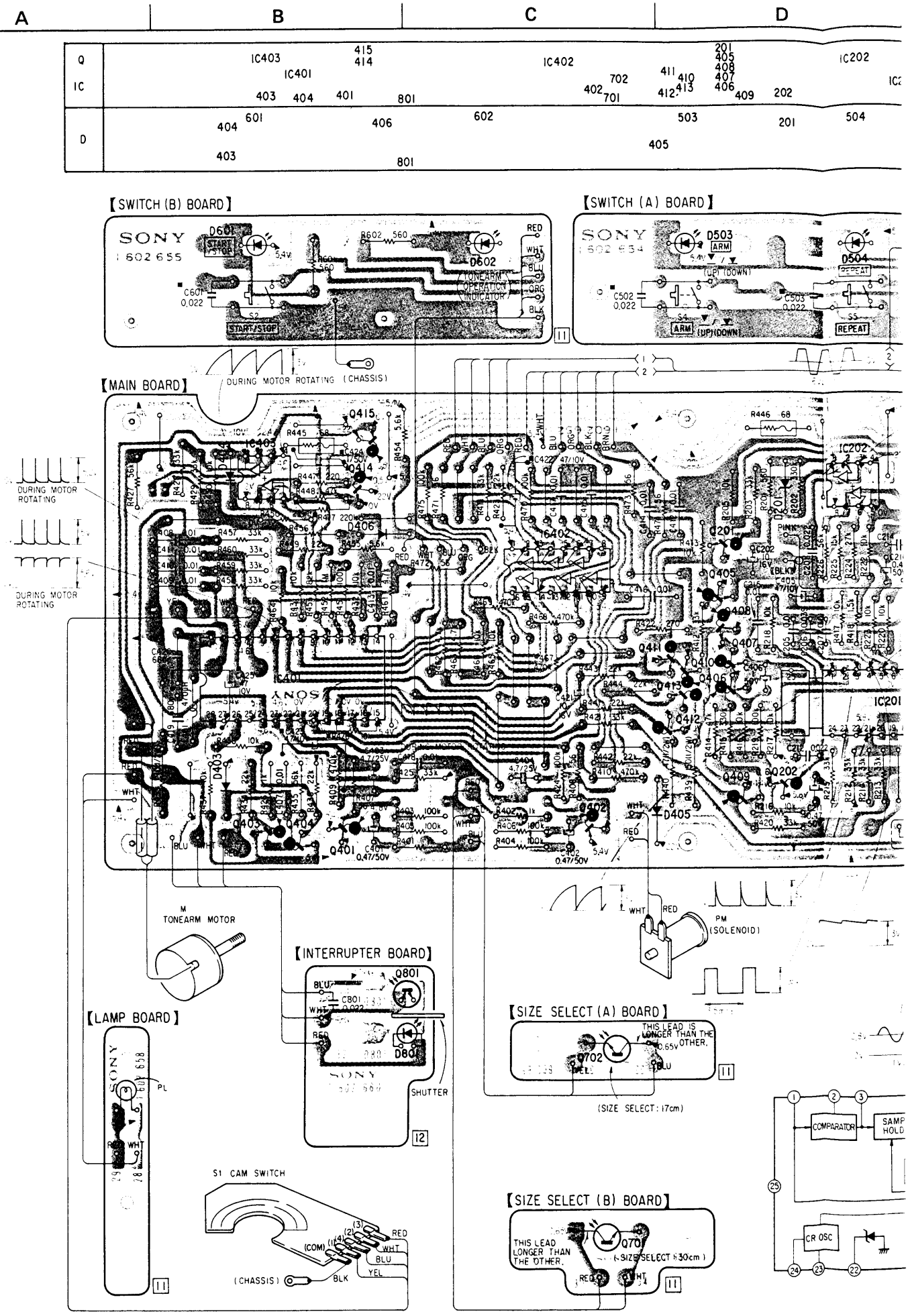

US model (Serial No. up to 801,000)
AEP model (Serial No. up to 501,100)
UK model (Serial No. up to 601,000)

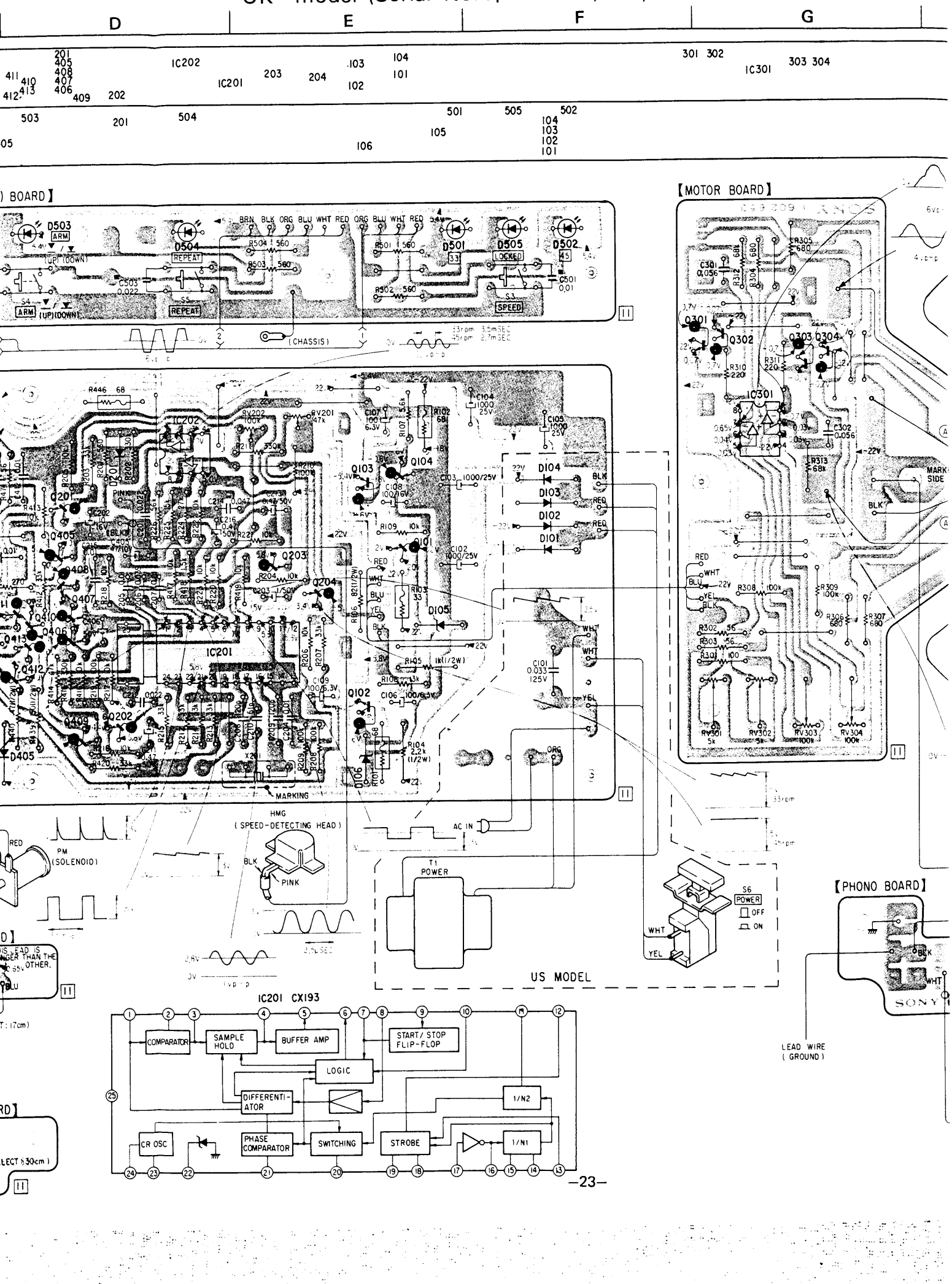

G H I J

301 302 303 304
IC301

Q
IC

D

【MOTOR BOARD】

MOTOR COIL
(TURNTABLE MOTOR)

Ⓐ IS LONGER THAN Ⓑ.

MARKING SIDE

【PHONO BOARD】

AEP, UK MODEL

S6 POWER OFF ON

TONEARM

(CHASSIS)

(UK MODEL)
240V AC
220V AC
(AEP MODEL)

START/STOP BUTTON (S2)

LEAD WIRE (GROUND)

R-CH
L-CH

T1 POWER

US model (Serial No. up to 801,000)
AEP model (Serial No. up to 501,100)
UK model (Serial No. up to 601,000)

I J K L

1 2 3 4 5

Note:

- Color code of sleeving over the end of the jacket.

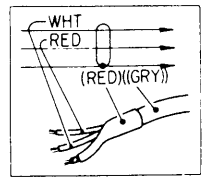

- : B+ pattern

TOR COIL
ABLE MOTOR)

S
GER THAN
Ⓑ.

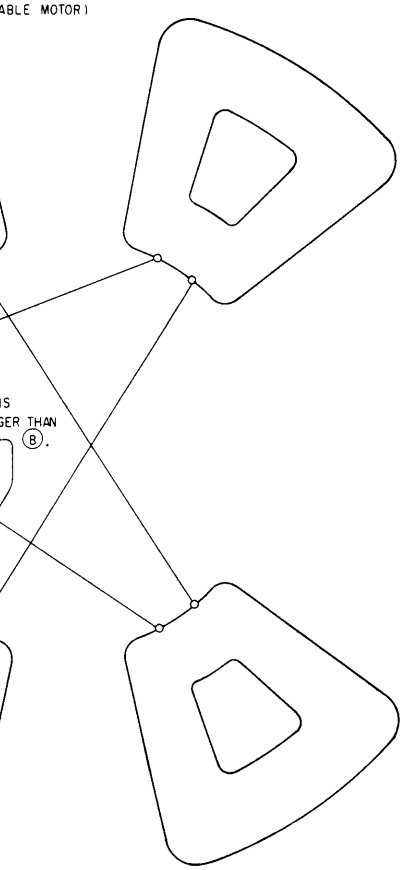

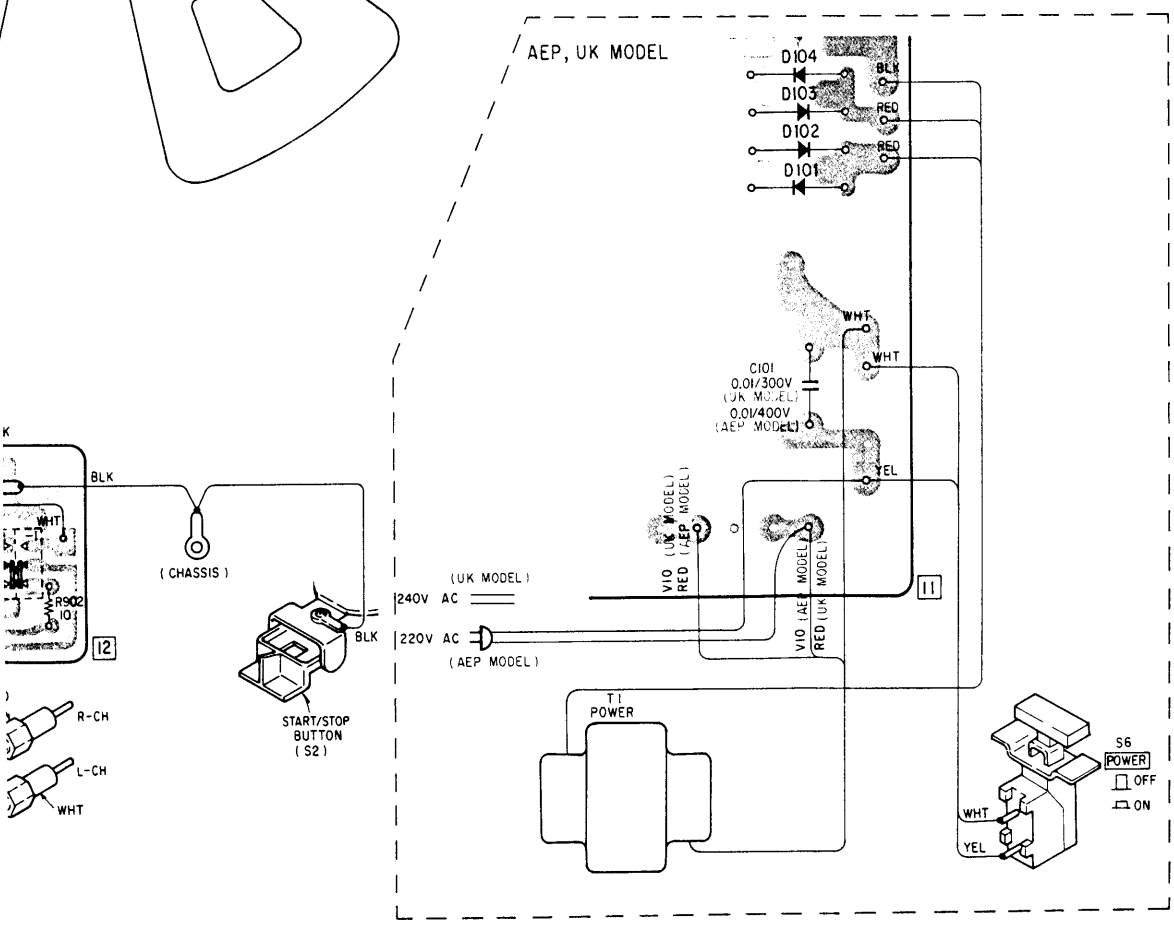

Replacement Semiconductors

For replacement, use semiconductors except in ( ).

2SD414

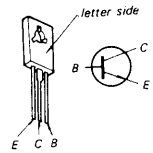

2SB548

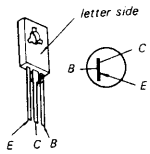

2SA1027R (2SA733)

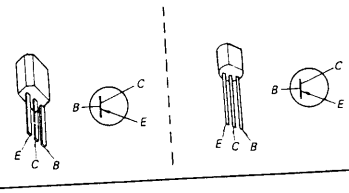

2SC1364 (2SC945)

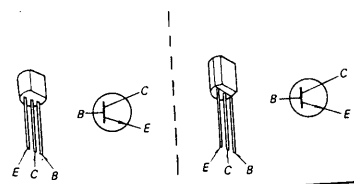

2SC1475 (2SD774)

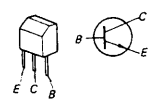

PH101

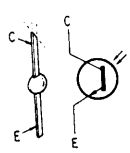

PH103

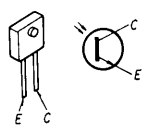

CX193

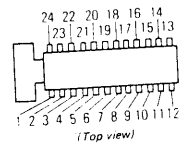

μPC4557C
μPC4558C

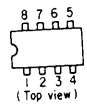

μPD554C035

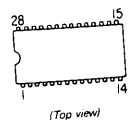

μPD4049C (MB84049B)

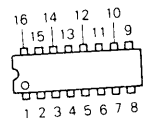

10E2
1S1555 (1T40)

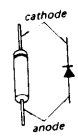

EQB01-12Z (EQA01-12)
EQB01-06 (EQA01-06)

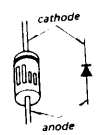

SEL1320G
SEL1120R

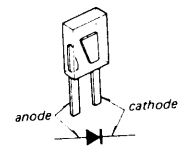

SR110

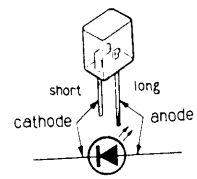

5GF-MS-07F

(1)

Note:

- Items marked "♦" are not stocked since they are seldom required for routine service. Some delay should be anticipated when ordering these items.
- All screws are Phillips (cross recess) type unless otherwise noted.
  (-) = slotted head

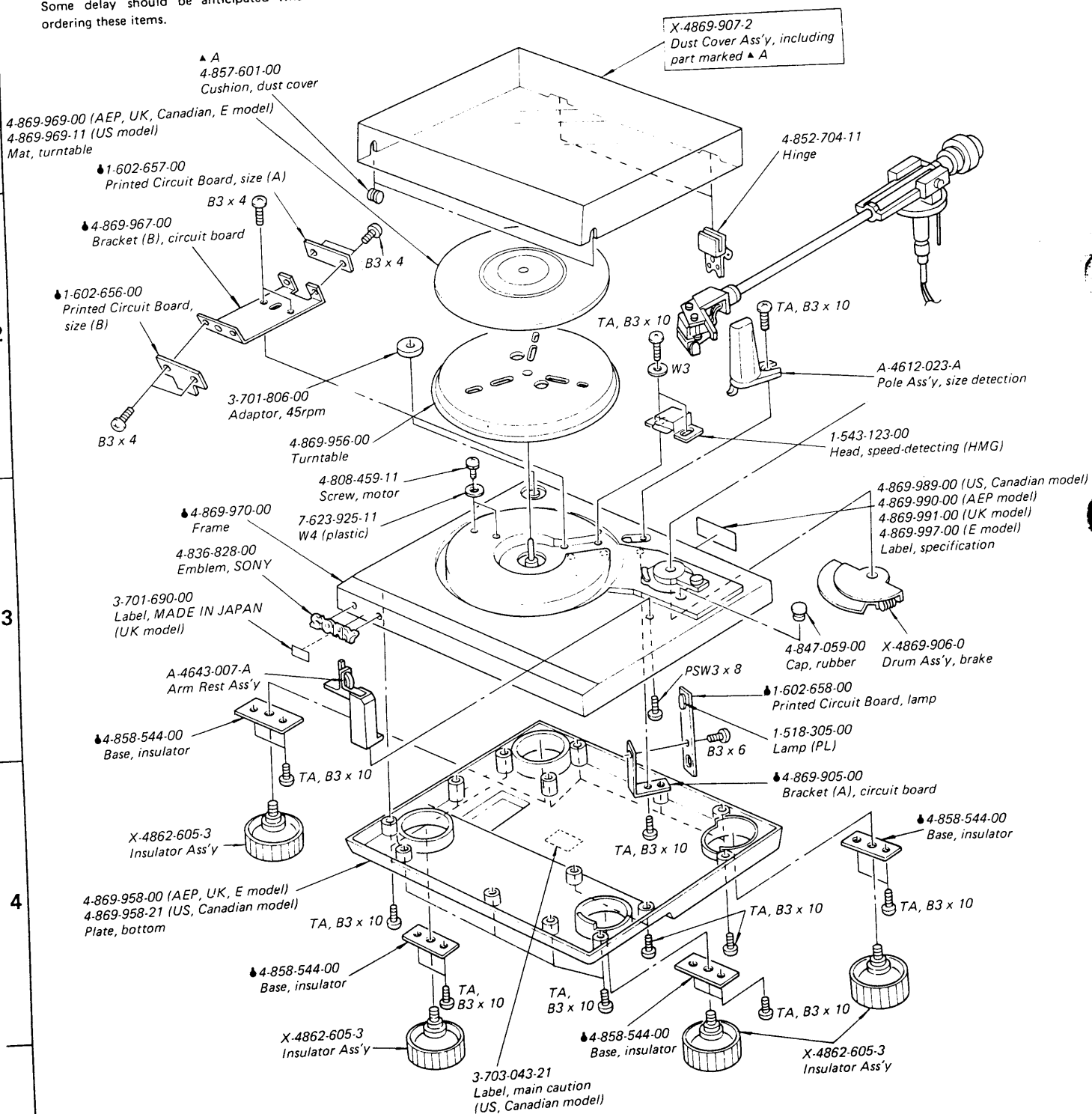

(2)

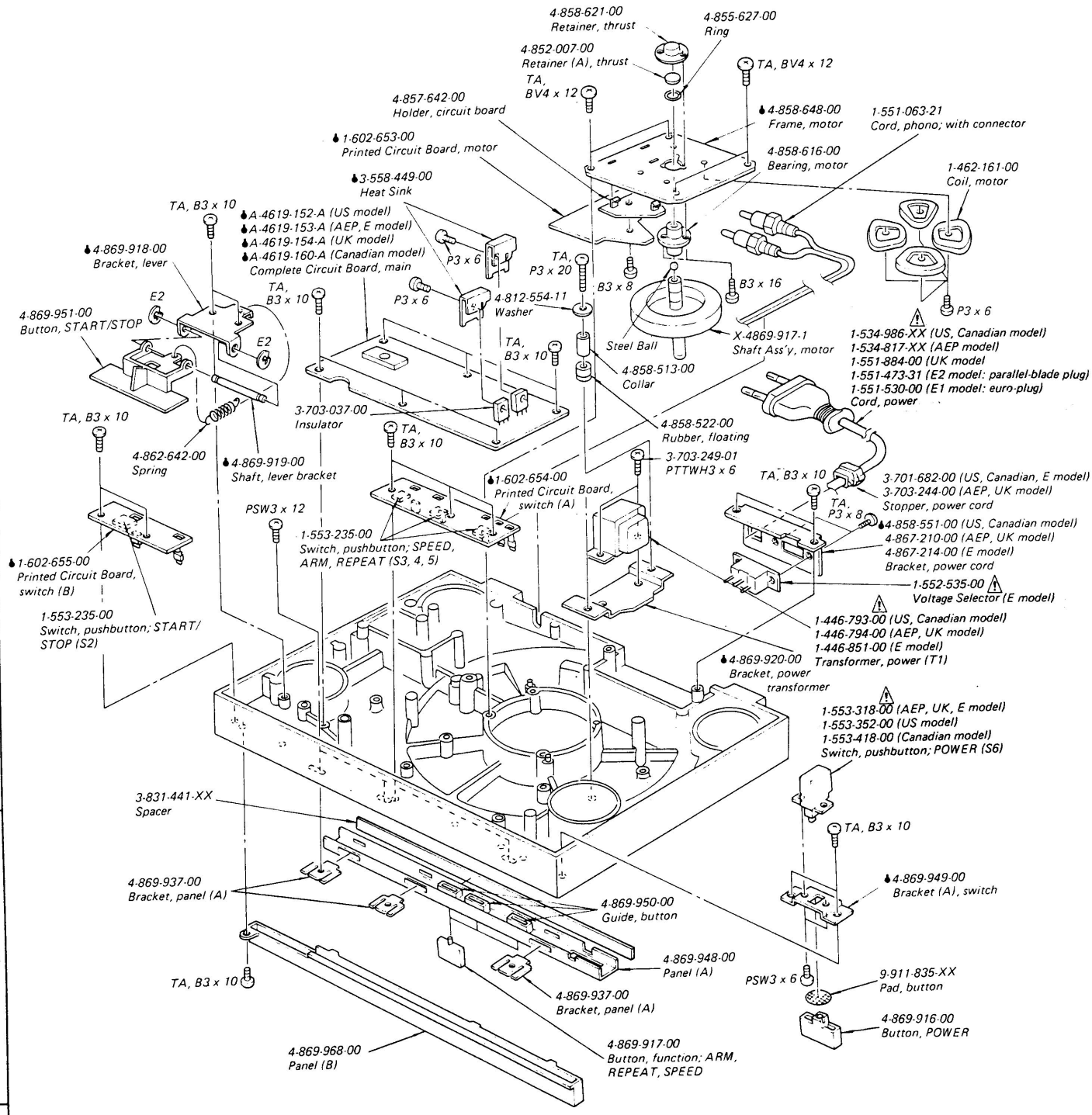

Note: The components identified by shading and mark ⚠ are critical for safety. Replace only with part number specified.

Note: Les composants identifiés par une trame et une marque ⚠ sont critiques pour la sécurité. Ne les remplacer que par une pièce portant le numéro spécifié.

A B C D

1 2 3 4 5

(3)

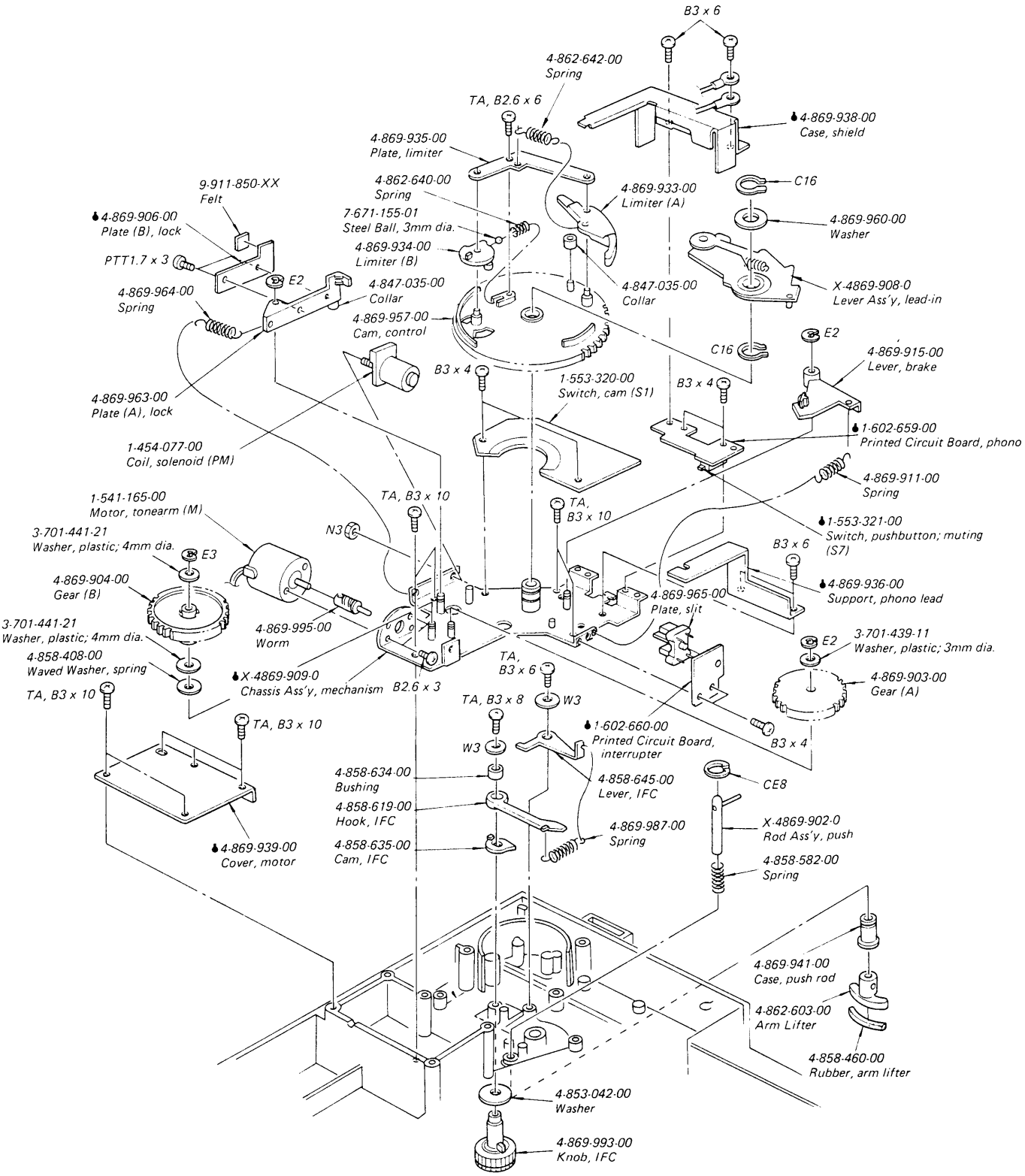
B3 x 6
4-862-642-00
Spring
TA, B2.6 x 6
4-869-938-00
Case, shield
4-869-935-00
Plate, limiter
9-911-850-XX
Felt
4-862-640-00
Spring
4-869-933-00
Limiter (A)
C16
4-869-906-00
Plate (B), lock
7-671-155-01
Steel Ball, 3mm dia.
4-869-960-00
Washer
PTT1.7 x 3
4-869-934-00
Limiter (B)
E2
4-847-035-00
Collar
4-847-035-00
Collar
X-4869-908-0
Lever Ass'y, lead-in
4-869-964-00
Spring
4-869-957-00
Cam, control
C16
E2
4-869-915-00
Lever, brake
B3 x 4
1-553-320-00
Switch, cam (S1)
B3 x 4
4-869-963-00
Plate (A), lock
1-602-659-00
Printed Circuit Board, phono
1-454-077-00
Coil, solenoid (PM)
4-869-911-00
Spring
TA, B3 x 10
TA,
B3 x 10
1-541-165-00
Motor, tonearm (M)
1-553-321-00
Switch, pushbutton; muting
(S7)
N3
3-701-441-21
Washer, plastic; 4mm dia.
E3
B3 x 6
4-869-936-00
Support, phono lead
4-869-904-00
Gear (B)
4-869-965-00
Plate, slit
3-701-441-21
Washer, plastic; 4mm dia.
4-869-995-00
Worm
E2
3-701-439-11
Washer, plastic; 3mm dia.
4-858-408-00
Waved Washer, spring
TA,
B3 x 6
4-869-903-00
Gear (A)
TA, B3 x 10
X-4869-909-0
Chassis Ass'y, mechanism
B2.6 x 3
TA, B3 x 8
W3
TA, B3 x 10
1-602-660-00
Printed Circuit Board,
interrupter
B3 x 4
W3
4-858-634-00
Bushing
4-858-645-00
Lever, IFC
CE8
4-858-619-00
Hook, IFC
4-869-987-00
Spring
X-4869-902-0
Rod Ass'y, push
4-858-635-00
Cam, IFC
4-858-582-00
Spring
4-869-939-00
Cover, motor
4-869-941-00
Case, push rod
4-862-603-00
Arm Lifter
4-858-460-00
Rubber, arm lifter
4-853-042-00
Washer
4-869-993-00
Knob, IFC

(4)

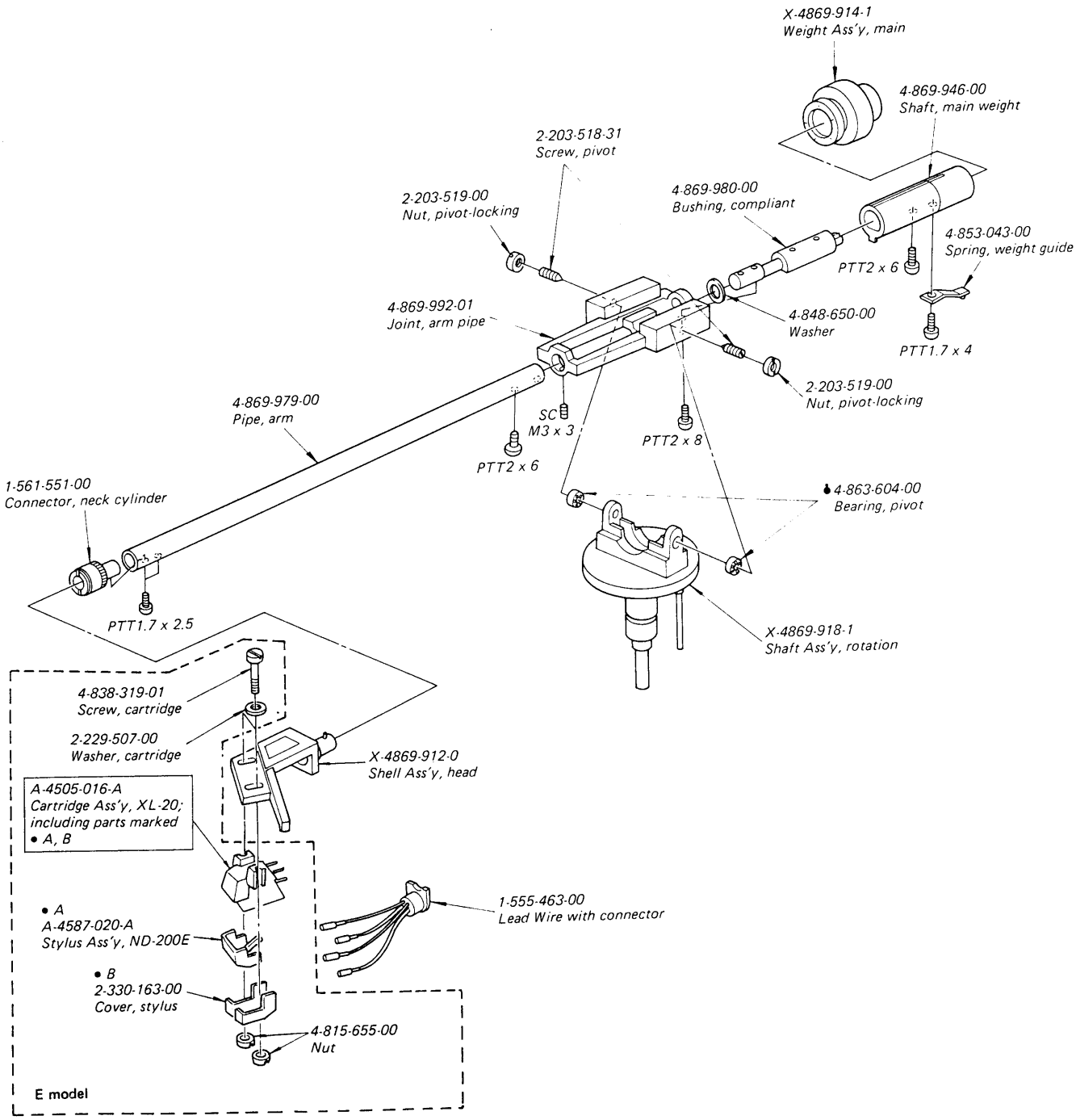
X-4869-914-1
Weight Ass'y, main
4-869-946-00
Shaft, main weight
2-203-518-31
Screw, pivot
2-203-519-00
Nut, pivot-locking
4-869-980-00
Bushing, compliant
4-853-043-00
Spring, weight guide
PTT2 x 6
4-869-992-01
Joint, arm pipe
4-848-650-00
Washer
PTT1.7 x 4
2-203-519-00
Nut, pivot-locking
4-869-979-00
Pipe, arm
SC
M3 x 3
PTT2 x 8
PTT2 x 6
1-561-551-00
Connector, neck cylinder
4-863-604-00
Bearing, pivot
PTT1.7 x 2.5
X-4869-918-1
Shaft Ass'y, rotation
4-838-319-01
Screw, cartridge
2-229-507-00
Washer, cartridge
X-4869-912-0
Shell Ass'y, head
A-4505-016-A
Cartridge Ass'y, XL-20;
including parts marked
• A, B
1-555-463-00
Lead Wire with connector
• A
A-4587-020-A
Stylus Ass'y, ND-200E
• B
2-330-163-00
Cover, stylus
4-815-655-00
Nut
E model

SECTION 6
ELECTRICAL PARTS LIST

Ref. No.	Part No.	Description
	SEMICONDUCTORS	
	Transistors	
Q101, 102	8-729-141-43	2SD414
Q103	8-729-154-83	2SB548
⇒ Q104	8-729-612-77	2SA1027R
⇒ Q201–203	8-729-663-47	2SC1364
⇒ Q204	8-729-612-77	2SA1027R
Q301	8-729-141-43	2SD414
Q302	8-729-154-83	2SB548
Q303	8-729-141-43	2SD414
Q304	8-729-154-83	2SB548
⇒ Q401, 402	8-729-612-77	2SA1027R
⇒ Q403–410	8-729-663-47	2SC1364
⇒ Q411	8-760-413-10	2SC1475
⇒ Q412	8-729-663-47	2SC1364
⇒ Q413	8-729-413-10	2SC1475
Q414	8-729-141-43	2SD414
Q415	8-729-154-83	2SB548
Q701, 702	8-729-101-01	PH101
Q801	8-729-101-13	PH103
	ICs	
IC201	8-751-930-00	CX193
IC202	8-759-145-57	μPC4557C
IC301	8-759-145-58	μPC4558C
IC401	8-759-154-35	μPD554C035
⇒ IC402	8-759-140-49	μPD4049C
IC403	8-759-145-58	μPC4558C
	Diodes	
D101–104	8-719-200-02	10E2
⇒ D105	8-719-930-12	EQB01-12Z
⇒ D106	8-719-931-06	EQB01-06
⇒ D201	8-719-931-06	EQB01-06
⇒ D403, 404	8-719-815-55	1S1555
D405	8-719-200-02	10E2
⇒ D406	8-719-815-55	1S1555
D501–504	8-719-311-20	SEL1120R
D505	8-719-313-20	SEL1320G
D601, 602	8-719-311-20	SEL1120R
D801	8-719-101-11	SR110
H1, H2	8-719-905-07	5GF-MS-07F

⇒: Due to standardization, interchangeable replacements may be substituted for parts specified in the diagrams.

Note: The components identified by shading and mark ⚠ are critical for safety. Replace only with part number specified.

Ref. No.	Part No.	Description
	CAPACITORS	

Common capacitors are omitted. Refer to the lists on pages 32 and 33 for their part numbers.

C101	⚠1-161-744-00	0.01μF	400V	ceramic (AEP, E model)
	⚠1-130-230-00	0.01μF	300V	film (UK model)
	⚠1-130-233-00	0.033μF	125V	film (US model)
	⚠1-130-098-00	0.022μF	125V	film (Canadian model)
C102–105	⚠1-123-498-00	1000μF	25V	electrolytic
C210	1-102-491-00	51pF	50V	ceramic

RESISTORS

All resistors are in ohms. Common ¼W carbon resistors are omitted. Refer to the list on page 34 for their part numbers.

R101, 102	⚠1-217-397-00	68	¼W	fusible
R103	⚠1-217-393-00	33	¼W	fusible
R104	1-244-881-00	2.2k	½W	carbon
R105	1-244-873-00	1k	½W	carbon
R106	1-213-130-00	82	½W	carbon
R433	1-244-825-00	10	½W	carbon
R439	1-244-853-00	150	½W	carbon
R440	1-244-841-00	47	½W	carbon
R445, 446	⚠1-217-397-00	68	¼W	fusible

RV201	1-226-433-00	50k-B, adjustable; 33rpm (US model: serial No. up to 801,000 / AEP model: serial No. up to 501,100 / UK model: serial No. up to 601,000)
	1-226-759-00	50k-B, adjustable; 33rpm (US model: serial No. 801,001 and later / AEP model: serial No. 501,101 and later / UK model: serial No. 601,001 and later / Canadian, E model)

Note: Les composants identifiés par une trame et une marque ⚠ sont critiques pour la sécurité. Ne les remplacer que par une pièce portant le numéro spécifié.

- Items marked "♦" are not stocked since they are seldom required for routine service. Some delay should be anticipated when ordering these items.

Ref. No.	Part No.	Description
RV202	1-226-434-00	100k-B, adjustable; 45rpm (US model: serial No. up to 801,000 / AEP model: serial No. up to 501,100 / UK model: serial No. up to 601,000)
	1-226-938-00	100k-B, adjustable; 45prm (US model: serial No. 801,001 and later / AEP model: serial No. 501,101 and later / UK model: serial No. 601,001 and later / Canadian, E model)
RV301, 302	1-226-235-00	5k-B, adjustable; gain
RV303, 304	1-226-239-00	100k-B, adjustable; offset

MISCELLANEOUS

HMG	1-543-123-00	Head, speed-detecting
L401	1-408-096-00	Coil, 470μH; microinductor
M	1-541-165-00	Motor, tonearm
PL	1-518-305-00	Lamp
PM	1-454-077-00	Coil, solenoid
S1	1-553-320-00	Switch, cam
S2	1-553-235-00	Switch, pushbutton; START/STOP
S3	1-553-235-00	Switch, pushbutton; SPEED
S4	1-553-235-00	Switch, pushbutton; ARM
S5	1-553-235-00	Switch, pushbutton; REPEAT
S6	⚠1-553-318-00	Switch, pushbutton; POWER (AEP, UK, E model)
	⚠1-553-352-00	Switch, pushbutton; POWER (US model)
	⚠1-553-418-00	Switch, pushbutton; POWER (Canadian model)
S7	1-553-321-00	Switch, pushbutton; muting
T1	⚠1-446-793-00	Transformer, power (US, Canadian model)
	⚠1-446-794-00	Transformer, power (AEP, UK model)
	⚠1-446-851-00	Transformer, power (E model)
X201	1-527-380-00	Crystal, OSC
	1-462-161-00	Coil, motor
	⚠1-534-817-XX	Cord, power (AEP model)
	⚠1-534-986-XX	Cord, power (US, Canadian model)
	1-551-063-21	Cord, phono; with connector
	⚠1-551-473-31	Cord, power; parallel-blade plug (E2 model)
	⚠1-551-530-00	Cord, power; euro-plug (E1 model)
	⚠1-551-884-00	Cord, power (UK model)
	⚠1-552-535-00	Voltage Selector (E model)
	1-555-463-00	Lead Wire with connector
	1-561-551-XX	Connector, neck cylinder

Note: The components identified by shading and mark ⚠ are critical for safety. Replace only with part number specified.

Ref. No.	Part No.	Description

COMPLETE CIRCUIT BOARDS

♦ A-4619-152-A	Main (US model)
♦ A-4619-153-A	Main (AEP, E model)
♦ A-4619-154-A	Main (UK model)
♦ A-4619-160-A	Main (Canadian model)

PRINTED CIRCUIT BOARDS

♦1-602-653-00	Motor
♦1-602-654-00	Switch (A)
♦1-602-655-00	Switch (B)
♦1-602-656-00	Size (B)
♦1-602-657-00	Size (A)
♦1-602-658-00	Lamp
♦1-602-659-00	Phono
♦1-602-660-00	Interrupter

ACCESSORIES AND PACKING MATERIALS

Part No.	Description
X-4869-912-0	Shell Ass'y, head
X-4869-915-0	Screw Ass'y, cartridge
3-701-634-00	Bag, plastic; for turntable
3-701-630-00	Bag, plastic; for instruction manual
3-701-616-00	Bag, plastic; for head shell
3-701-806-00	Adaptor, 45rpm
3-783-188-11	Manual, instruction (AEP, UK, E model)
3-783-188-21	Manual, instruction (US model)
3-783-188-21 / 3-794-902-31)	Manual, instruction (Canadian model)
4-847-314-00	Bag, protection; for set
4-848-002-00	Cushion, arm pipe
4-862-043-00	Cushion, tonearm
4-862-680-00	Protector
4-869-959-00	Plate, light interception
4-869-962-00	Adjuster, drop-point
4-869-974-00	Carton, for accessories
4-869-975-00	Cushion, right
4-869-976-00	Cushion, left
4-869-977-00	Case, accessories
4-869-981-00	Sub-weight
4-869-996-00	Carton
4-870-529-00	Case, head shell (US, AEP, UK model)

Note: Les composants identifiés par une trame et une marque ⚠ sont critiques pour la sécurité. Ne les remplacer que par une pièce portant le numéro spécifié.

ELECTROLYTIC CAPACITORS

CAP. (μF)	RATING → : Use the high voltage rated one.					
	6.3 VOLT.	10 VOLT.	16 VOLT.	25 VOLT.	35 VOLT.	50 VOLT.
	PART No.	PART No.	PART No.	PART No.	PART No.	PART No.
0.47					→	1-121-726-00
1.0					→	1-121-391-00
2.2					→	1-121-450-00
3.3	→	→	→	1-121-392-00	→	1-121-393-00
4.7	→	→	→	1-121-395-00	→	1-121-396-00
10	→	→	1-121-651-00	1-121-398-00	→	1-121-738-00
22	→	→	1-121-479-00	1-121-480-00	1-121-662-00	1-121-152-00
33	→	→	1-121-403-00	1-121-404-00	1-121-652-00	1-121-405-00
47	→	1-121-352-00	1-121-409-00	1-121-410-00	1-121-653-00	1-121-411-00
100	→	1-121-414-00	1-121-415-00	1-121-416-00	1-121-357-00	1-121-417-00
220	1-121-419-00	1-121-420-00	1-121-421-00	1-121-422-00	1-121-261-00	1-121-423-00
330	1-121-751-00	1-121-805-00	1-121-521-00	1-121-654-00	1-121-655-00	1-121-656-00
470	1-121-424-00	1-121-425-00	1-121-426-00	1-121-733-00	1-121-361-00	1-121-810-00
1000	–	1-121-736-00	1-121-245-00	1-121-657-00	1-121-388-00	1-123-061-00
2200	1-121-658-00	1-121-659-00	1-121-660-00	1-123-067-00	1-121-984-00	–
3300	1-121-661-00	1-123-075-00	1-123-071-00	–	–	–

CAP. (μF)	100 VOLT.	160 VOLT.	250 VOLT.	350 VOLT.
	PART No.	PART No.	PART No.	PART No.
0.47	–	–	–	–
1.0	1-123-249-00	1-123-252-00	1-123-003-00	1-121-168-00
2.2	1-123-250-00	1-123-026-00	–	1-123-028-00
3.3	1-121-995-00	–	1-123-004-00	1-123-006-00
4.7	1-123-255-00	1-121-246-00	1-121-759-00	1-123-007-00
10	1-121-126-00	1-121-999-00	1-123-254-00	1-123-008-00
22	1-121-996-00	1-123-253-00	1-123-005-00	1-123-022-00
33	1-121-997-00	1-121-757-00	–	–
47	1-123-251-00	1-121-919-00	–	–
100	1-123-084-00	–	–	–

CERAMIC CAPACITORS

CAP. (pF)	RATING							
	50 VOLT.	CAP. (pF)	50 VOLT.	CAP. (pF)	50 VOLT.	CAP. (μF)	50 VOLT.	
	PART No.		PART No.		PART No.		PART No.	
0.5	1-101-837-00	22	1-102-959-00	150	1-101-361-00	0.001	1-102-074-00	
0.75	1-101-586-00	24	1-102-960-00	160	1-101-367-00	0.0012	1-102-118-00	
1.0	1-102-934-00	27	1-102-961-00	180	1-102-976-00	0.0015	1-102-119-00	
1.5	1-101-576-00	30	1-102-962-00	200	1-102-977-00	0.0018	1-102-120-00	
2.0	1-102-935-00	33	1-102-963-00	220	1-102-978-00	0.0022	1-102-121-00	
3	1-102-936-00	36	1-102-964-00	240	1-102-979-00	0.0027	1-102-122-00	
4	1-102-937-00	39	1-102-965-00	270	1-102-980-00	0.0033	1-102-123-00	
5	1-102-942-00	43	1-102-966-00	300	1-102-981-00	0.0039	1-102-124-00	
6	1-102-943-00	47	1-101-880-00	330	1-102-820-00	0.0047	1-102-125-00	
7	1-102-944-00	51	1-101-882-00	360	1-102-821-00	0.0056	1-102-126-00	
8	1-102-945-00	56	1-101-884-00	390	1-102-822-00	0.0068	1-102-127-00	
9	1-102-946-00	62	1-101-886-00	430	1-102-823-00	0.0082	1-102-128-00	
10	1-102-947-00	68	1-101-888-00	470	1-102-824-00	0.01	1-102-129-00	
11	1-102-948-00	75	1-101-890-00	510	1-101-059-00	0.022	1-101-005-00	
12	1-102-949-00	82	1-102-971-00	560	1-102-115-00	0.047	1-101-006-00	
13	1-102-950-00	91	1-102-972-00	680	1-102-116-00			
15	1-102-951-00	100	1-102-973-00	820	1-102-117-00			
16	1-102-952-00	110	1-102-815-00					
18	1-102-953-00	120	1-102-816-00					
20	1-102-958-00	130	1-101-081-00					

0.001μF = 1,000pF

CERAMIC (SEMICONDUCTOR) CAPACITORS

CAP. (μF)	RATING → : Use the high voltage rated one.				
	25 VOLT.	50 VOLT.	CAP. (μF)	25 VOLT.	50 VOLT.
	PART No.	PART No.		PART No.	PART No.
0.001	→	1-161-039-00	0.018	1-161-016-00	1-161-054-00
0.0012	→	1-161-040-00	0.022	1-161-017-00	1-161-055-00
0.0015		1-161-041-00	0.027	1-161-018-00	1-161-056-00
0.0018		1-161-042-00	0.033	1-161-019-00	1-161-057-00
0.0022		1-161-043-00	0.039	1-161-010-00	1-161-058-00
0.0027	→	1-161-044-00	0.047	1-161-021-00	1-161-059-00
0.0033	→	1-161-045-00	0.056	→	1-161-060-00
0.0039	→	1-161-046-00	0.068	→	1-161-061-00
0.0047	→	1-161-047-00	0.082	1-161-024-00	1-161-062-00
0.0056	→	1-161-048-00	0.1	1-161-025-00	1-161-063-00
0.0068	→	1-161-049-00			
0.0082	1-161-012-00	1-161-050-00			
0.01	1-161-013-00	1-161-051-00			
0.012	→	1-161-052-00			
0.015	1-161-015-00	1-161-053-00			

MYLAR CAPACITORS

CAP. (μF)	RATING 50 VOLT. PART No.	100 VOLT. PART No.	200 VOLT. PART No.	CAP. (μF)	50 VOLT. PART No.	100 VOLT. PART No.	200 VOLT. PART No.	CAP. (μF)	50 VOLT. PART No.	100 VOLT. PART No.	200 VOLT. PART No.
0.001	1-108-227-00	1-108-365-00	1-108-409-00	0.01	1-108-239-00	1-108-377-00	1-108-421-00	0.1	1-108-251-00	1-108-389-00	1-108-433-00
0.0012	1-108-351-00	1-108-366-00	1-108-410-00	0.012	1-108-357-00	1-108-378-00	1-108-422-00	0.12	1-108-363-00	1-108-390-00	1-108-434-00
0.0015	1-108-228-00	1-108-367-00	1-108-411-00	0.015	1-108-240-00	1-108-379-00	1-108-423-00	0.15	1-108-252-00	1-108-391-00	1-108-435-00
0.0018	1-108-352-00	1-108-368-00	1-108-412-00	0.018	1-108-358-00	1-108-380-00	1-108-424-00	0.18	1-108-364-00	1-108-392-00	1-108-436-00
0.0022	1-108-230-00	1-108-369-00	1-108-413-00	0.022	1-108-242-00	1-108-381-00	1-108-425-00	0.22	1-108-254-00	1-108-393-00	1-108-437-00
0.0027	1-108-353-00	1-108-370-00	1-108-414-00	0.027	1-108-359-00	1-108-382-00	1-108-426-00	0.27	1-108-854-00	–	–
0.0033	1-108-232-00	1-108-371-00	1-108-415-00	0.033	1-108-244-00	1-108-383-00	1-108-427-00	0.33	1-108-855-00	–	–
0.0039	1-108-354-00	1-108-372-00	1-108-416-00	0.039	1-108-360-00	1-108-384-00	1-108-428-00	0.39	1-108-856-00	–	–
0.0047	1-108-234-00	1-108-373-00	1-108-417-00	0.047	1-108-246-00	1-108-385-00	1-108-429-00	0.47	1-108-857-00	–	–
0.0056	1-108-355-00	1-108-374-00	1-108-418-00	0.056	1-108-361-00	1-108-386-00	1-108-430-00				
0.0068	1-108-237-00	1-108-375-00	1-108-419-00	0.068	1-108-249-00	1-108-387-00	1-108-431-00				
0.0082	1-108-356-00	1-108-376-00	1-108-420-00	0.082	1-108-362-00	1-108-388-00	1-108-432-00				

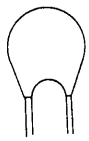

TANTALUM CAPACITORS

→: Use the high voltage rated one.

CAP. (μF)	RATING 3.15 VOLT. PART No.	6.3 VOLT. PART No.	10 VOLT. PART No.	16 VOLT. PART No.	20 VOLT. PART No.	25 VOLT. PART No.	35 VOLT. PART No.
0.01					→	→	1-131-396-00
0.015						→	1-131-397-00
0.022						→	1-131-398-00
0.033						→	1-131-399-00
0.047						→	1-131-400-00
0.068					→	→	1-131-401-00
0.1					→	→	1-131-402-00
0.15					→	→	1-131-403-00
0.22					→	→	1-131-404-00
0.33					→	1-131-409-00	1-131-405-00
0.47	–	–	–	–	1-131-412-00	→	1-131-406-00
0.68	–	–	–	1-131-415-00	→	1-131-410-00	1-131-407-00
1.0	–	–	1-131-418-00	–	1-131-413-00	→	1-131-408-00
1.5	–	1-131-421-00	–	1-131-416-00	→	1-131-411-00	1-131-348-00
2.2	1-131-424-00	–	1-131-419-00	–	1-131-414-00	1-131-355-00	1-131-349-00
3.3	–	1-131-422-00	–	1-131-417-00	1-131-362-00	1-131-356-00	1-131-350-00
4.7	1-131-425-00	–	1-131-420-00	1-131-369-00	1-131-363-00	1-131-357-00	1-131-351-00
6.8	–	1-131-423-00	1-131-376-00	1-131-370-00	1-131-364-00	1-131-358-00	1-131-352-00
10	1-131-426-00	1-131-383-00	1-131-377-00	1-131-371-00	1-131-365-00	1-131-359-00	1-131-353-00
15	1-131-390-00	1-131-384-00	1-131-378-00	1-131-372-00	1-131-366-00	1-131-360-00	–
22	1-131-391-00	1-131-385-00	1-131-379-00	1-131-373-00	1-131-367-00		
33	1-131-392-00	1-131-386-00	1-131-380-00	1-131-374-00			
47	1-131-393-00	1-131-387-00	1-131-381-00	–			
68	1-131-394-00	1-131-388-00	–	–			
100	1-131-395-00	–	–	–			

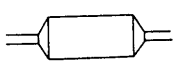

TANTALUM CAPACITORS

CAP. (μF)	RATING 3 VOLT. PART No.	6.3 VOLT. PART No.	10 VOLT. PART No.	16 VOLT. PART No.	20 VOLT. PART No.	35 VOLT. PART No.
0.033						1-131-273-00
0.047						1-131-274-00
0.068						1-131-275-00
0.1						1-131-276-00
0.15						1-131-277-00
0.22			–	–	1-131-262-00	1-131-278-00
0.33			–	–	1-131-263-00	1-131-279-00
0.47			1-131-169-00	–	1-131-264-00	1-131-280-00
0.68			–	1-131-258-00	1-131-265-00	1-131-281-00
1.0			1-131-254-00	–	1-131-266-00	1-131-282-00
1.5		1-131-250-00	–	–	1-131-267-00	1-131-283-00
2.2		–	–	1-131-259-00	1-131-268-00	1-131-284-00
3.3		–	1-131-255-00	–	1-131-269-00	–
4.7		1-131-251-00	1-131-171-00	–	1-131-270-00	–
6.8		–	–	1-131-260-00	1-131-271-00	–
10	–	–	1-131-256-00	–	1-131-272-00	–
15	–	1-131-252-00	–	1-131-261-00		
22	–	–	1-131-257-00	–		
33	1-131-176-00	1-131-253-00	1-131-173-00	–		
47	1-131-288-00	1-131-174-00	–			
100	1-131-177-00					

1/4 WATT CARBON RESISTORS

Ω	Part No.	Ω	Part No.	Ω	Part No.	Ω	Part No.	Ω	Part No.	Ω	Part No.	Ω	Part No.
1.0	1-246-401-00	10	1-246-425-00	100	1-246-449-00	1.0k	1-246-473-00	10k	1-246-497-00	100k	1-246-521-00	1.0M	1-246-545-00
1.1	1-246-402-00	11	1-246-426-00	110	1-246-450-00	1.1k	1-246-474-00	11k	1-246-498-00	110k	1-246-522-00	1.1M	1-210-814-00
1.2	1-246-403-00	12	1-246-427-00	120	1-246-451-00	1.2k	1-246-475-00	12k	1-246-499-00	120k	1-246-523-00	1.2M	1-210-815-00
1.3	1-246-404-00	13	1-246-428-00	130	1-246-452-00	1.3k	1-246-576-00	13k	1-246-500-00	130k	1-246-524-00	1.3M	1-210-816-00
1.5	1-246-405-00	15	1-246-429-00	150	1-246-453-00	1.5k	1-246-577-00	15k	1-246-501-00	150k	1-246-525-00	1.5M	1-210-817-00
1.6	1-246-406-00	16	1-246-430-00	160	1-246-454-00	1.6k	1-246-578-00	16k	1-246-502-00	160k	1-246-526-00	1.6M	1-210-818-00
1.8	1-246-407-00	18	1-246-431-00	180	1-246-455-00	1.8k	1-246-579-00	18k	1-246-503-00	180k	1-246-527-00	1.8M	1-210-819-00
2.0	1-246-408-00	20	1-246-432-00	200	1-246-456-00	2.0k	1-246-580-00	20k	1-246-504-00	200k	1-246-528-00	2.0M	1-210-820-00
2.2	1-246-409-00	22	1-246-433-00	220	1-246-457-00	2.2k	1-246-581-00	22k	1-246-505-00	220k	1-246-529-00	2.2M	1-210-821-00
2.4	1-246-410-00	24	1-246-434-00	240	1-246-458-00	2.4k	1-246-582-00	24k	1-246-506-00	240k	1-246-530-00	2.4M	1-244-754-00
2.7	1-246-411-00	27	1-246-435-00	270	1-246-459-00	2.7k	1-246-583-00	27k	1-246-507-00	270k	1-246-531-00	2.7M	1-244-755-00
3.0	1-246-412-00	30	1-246-436-00	300	1-246-460-00	3.0k	1-246-584-00	30k	1-246-508-00	300k	1-246-532-00	3.0M	1-244-756-00
3.3	1-246-413-00	33	1-246-437-00	330	1-246-461-00	3.3k	1-246-585-00	33k	1-246-509-00	330k	1-246-533-00	3.3M	1-244-757-00
3.6	1-246-414-00	36	1-246-438-00	360	1-246-462-00	3.6k	1-246-586-00	36k	1-246-510-00	360k	1-246-534-00	3.6M	1-244-758-00
3.9	1-246-415-00	39	1-246-439-00	390	1-246-463-00	3.9k	1-246-587-00	39k	1-246-511-00	390k	1-246-535-00	3.9M	1-244-759-00
4.3	1-246-416-00	43	1-246-440-00	430	1-246-464-00	4.3k	1-246-488-00	43k	1-246-512-00	430k	1-246-536-00	4.3M	1-244-760-00
4.7	1-246-417-00	47	1-246-441-00	470	1-246-465-00	4.7k	1-246-489-00	47k	1-246-513-00	470k	1-246-537-00	4.7M	1-244-761-00
5.1	1-246-418-00	51	1-246-442-00	510	1-246-466-00	5.1k	1-246-490-00	51k	1-246-514-00	510k	1-246-538-00	5.1M	1-244-762-00
5.6	1-246-419-00	56	1-246-443-00	560	1-246-467-00	5.6k	1-246-491-00	56k	1-246-515-00	560k	1-246-539-00		
6.2	1-246-420-00	62	1-246-444-00	620	1-246-468-00	6.2k	1-246-492-00	62k	1-246-516-00	620k	1-246-540-00		
6.8	1-246-421-00	68	1-246-445-00	680	1-246-469-00	6.8k	1-246-493-00	68k	1-246-517-00	680k	1-246-541-00		
7.5	1-246-422-00	75	1-246-446-00	750	1-246-470-00	7.5k	1-246-494-00	75k	1-246-518-00	750k	1-246-542-00		
8.2	1-246-423-00	82	1-246-447-00	820	1-246-471-00	8.2k	1-246-495-00	82k	1-246-519-00	820k	1-246-543-00		
9.1	1-246-424-00	91	1-246-448-00	910	1-246-472-00	9.1k	1-246-496-00	91k	1-246-520-00	910k	1-246-544-00		

HARDWARE NOMENCLATURE

Screw:

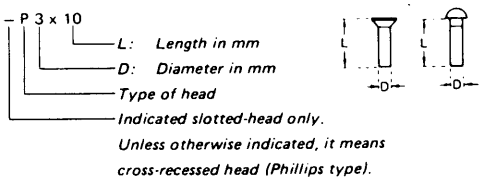

Nut, Washer, Retaining ring:

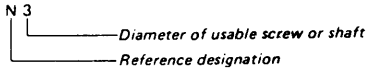

Reference Designation	Shape	Description	Remarks
SCREWS			
P		pan-head screw	binding-head (B) screw for replacement
PWH		pan-head screw with washer face	binding-head (B) screw and flat washer for replacement
PS PSP		pan-head screw with spring washer	binding-head (B) screw and spring washer for replacement
PSW PSPW		pan-head screw with spring and flat washers	binding-head (B) screw and spring and flat washers for replacement
R		round-head screw	binding-head (B) screw for replacement
K		flat-countersunk-head screw	
RK		oval-countersunk-head screw	
B		binding-head screw	
T		truss-head screw	binding-head (B) screw for replacement
F		flat-fillister-head screw	
RF		fillister-head screw	
BV		braizer-head screw	

Reference Designation	Shape	Description	Remarks
SELF-TAPPING SCREWS			
TA		self-tapping screw	ex: TA, P 3 x 10
PTP		pan-head self-tapping screw	binding-head self-tapping (TA, B) screw for replacement
PTPWH		pan-head self-tapping screw with washer face	binding-head self tapping (TA, B) screw and flat washer for replacement
PTTWH		pan-head thread-rolling screw with washer face	binding-head (B) screw and flat washer for replacement
SET SCREWS			
SC		set screw	
SC		hexagon-socket set screw	ex: SC 2.6 x 4, hexagon socket
NUT			
N		nut	
WASHERS			
W		flat washer	
SW		spring washer	
LW		internal-tooth lock washer	ex: LW3, internal
LW		external-tooth lock washer	ex: LW3, external
RETAINING RINGS			
E		retaining ring	
G		grip-type retaining ring	

Sony Corporation

© 1980