Deze download wordt u gratis aangeboden door Pick-upnaalden.nl

Web	:	www.pickupnaalden.com
Email	:	info@pick-upnaalden.nl
Facebook	:	www.facebook.com/pickupnaalden
Twitter	:	twitter.com/Pickupnaalden
Google+	:	https://plus.google.com/+FCaris_pickupnaalden

PS-FL770

SERVICE MANUAL

US Model
Canadian Model
AEP Model
E Model

SPECIFICATIONS

Turntable

Platter	28 cm (11 in.), aluminum-alloy diecast
Motor	Linear torque BSL (brushless and slotless) motor
Drive system	Direct drive
Control system	FG servo control system
Speed	33⅓ rpm, 45 rpm
Wow and flutter	0.03% (WRMS)*, 0.035% (WRMS) ±0.045% (DIN)
Signal-to-noise ratio	75 dB (DIN-B)
Automatic system	Lead-in, return, reject, repeat, record size selection

SAFETY-RELATED COMPONENT WARNING!!

COMPONENTS IDENTIFIED BY SHADING AND MARK ⚠ ON THE SCHEMATIC DIAGRAMS AND IN THE PARTS LIST ARE CRITICAL TO SAFE OPERATION. REPLACE THESE COMPONENTS WITH SONY PARTS WHOSE PART NUMBERS APPEAR AS SHOWN IN THIS MANUAL OR IN SUPPLEMENTS PUBLISHED BY SONY.

ATTENTION AU COMPOSANT AYANT RAPPORT À LA SÉCURITÉ!

LES COMPOSANTS IDENTIFIÉS PAR UNE TRAME ET UNE MARQUE ⚠ SUR LES DIAGRAMMES SCHÉMATIQUES ET LA LISTE DES PIÈCES SONT CRITIQUES POUR LA SÉCURITÉ DE FONCTIONNEMENT. NE REMPLACER CES COMPOSANTS QUE PAR DES PIÈCES SONY DONT LES NUMÉROS SONT DONNÉS DANS CE MANUEL OU DANS LES SUPPLÉMENTS PUBLIÉS PAR SONY.

Tonearm

Type	Electronic tonearm, linear tracking
Pivot-to-stylus length	75 mm (3 in.)
Overall arm length	170 mm (6¾ in.)
Tracking error	±0.1°
Tracking force adjustment range	1.25 ±0.25 g
Cartridge	plug-in type, 6 g

Cartridge (XL-300G for AEP, E model, VL-45G for certain US, Canadian model)

Type	Moving magnet type
Frequency response	20 Hz to 20 kHz
Channel separation	AEP, E model: 23 dB at 1 kHz US, Canadian model: 20 dB at 1 kHz
Output voltage	AEP, E model: 3 mV at 1 kHz, 5 cm/sec., 45° US, Canadian model: 3.5 mV at 1 kHz, 5 cm/sec., 45°
Load impedance	47 kilohms
Tracking force	1.25 g
Stylus	AEP, E model: Sony ND-300G US, Canadian model: Sony ND-145G
Weight	6 g

— Continued on page 2 —

MICROFILM

STEREO TURNTABLE SYSTEM

SONY®

General

Power requirements	AEP model: 220 V ac, 50/60 Hz US, Canadian model: 120 V ac, 60 Hz E model: 110 – 120 or 220 – 240 V ac adjustable 50/60 Hz
Power consumption	15 W
Dimensions	Approx. 355(w) x 90(h) x 400(d) mm (14 x 3½x 15¾ in.) including projecting parts and controls (For the dimensions with the module opened, see illustration below.)

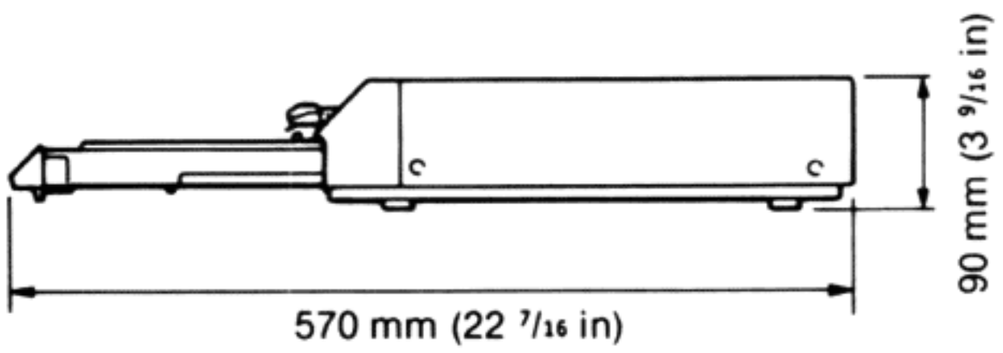

Weight	Approx. 7.0 kg (15 lbs 7 oz), net Approx. 8.2 kg (18 lbs 2 oz), in shipping carton

Note
This appliance conforms with EEC Directives 76/889 and 82/499 regarding interference suppression.

*** This new measuring method concerns only the turntable assembly, including the platter. It excludes wow and flutter caused by the tonearm, the cartridge, or the record. Measured by obtaining signal from magnetic pick-up head.**

FEATURES

● Unique modular turntable system
Other audio components (max. 35 kg) can be positioned on top of the turntable cabinet.

● RMS (Random Music Sensor)
The RMS allows you to play the selections on one side of the record in a desired sequence.

● Synchronized operation with the Sony tape decks
The synchronized operation is possible with Sony cassette decks equipped with a synchro remote control connector.

● Wireless remote control operation
With the optional ST-V77/V77L system control tuner, the total audio system can be remotely controlled.

● Direct function

● Servo-controlled linear tracking tonearm

● A microprocessor which controls four motors

● Fully automatic system

● Muting system

● Liner torque BSL motor

SAFETY CHECK-OUT (US Model)

After correcting the original service problem, perform the following safety check before releasing the set to the customer:
Check the antenna terminals, metal trim, "metallized" knobs, screws, and all other exposed metal parts for AC leakage. Check leakage as described below.

LEAKAGE TEST

The AC leakage from any exposed metal part to earth ground and from all exposed metal parts to any exposed metal part having a return to chassis, must not exceed 0.5 mA (500 microampers). Leakage current can be measured by any one of three methods.

1. A commercial leakage tester, such as the Simpson 229 or RCA WT-540A. Follow the manufacturers' instructions to use these instruments.
2. A battery-operated AC milliammeter. The Data Precision 245 digital multimeter is suitable for this job.
3. Measuring the voltage drop across a resistor by means of a VOM or battery-operated AC voltmeter. The "limit" indication is 0.75 V, so analog meters must have an accurate low-voltage scale. The Simpson 250 and Sanwa SH-63Trd are examples of a passive VOM that is suitable. Nearly all battery operated digital multimeters that have a 2V AC range are suitable. (See Fig. A)

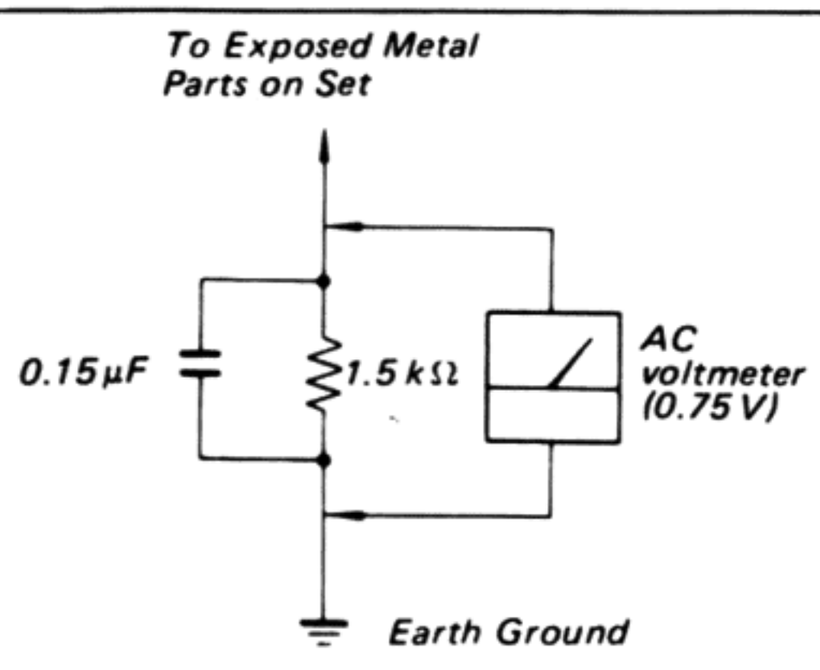

Fig. A. Using an AC voltmeter to check AC leakage.

MODEL IDENTIFICATION

– Specification Label –

SONY® MODEL NO. **PS-FL770**

STEREO TURNTABLE SYSTEM

US, Canadian model: AC: 120 V ~ 60 Hz 15 W
AEP, G-AEP model: AC: 220 V ~ 50/60 Hz 15 W
E model: AC: 110 – 120 V, 220 – 240 V ~ 50/60 Hz 15 W

FUNCTION OF CONTROLS

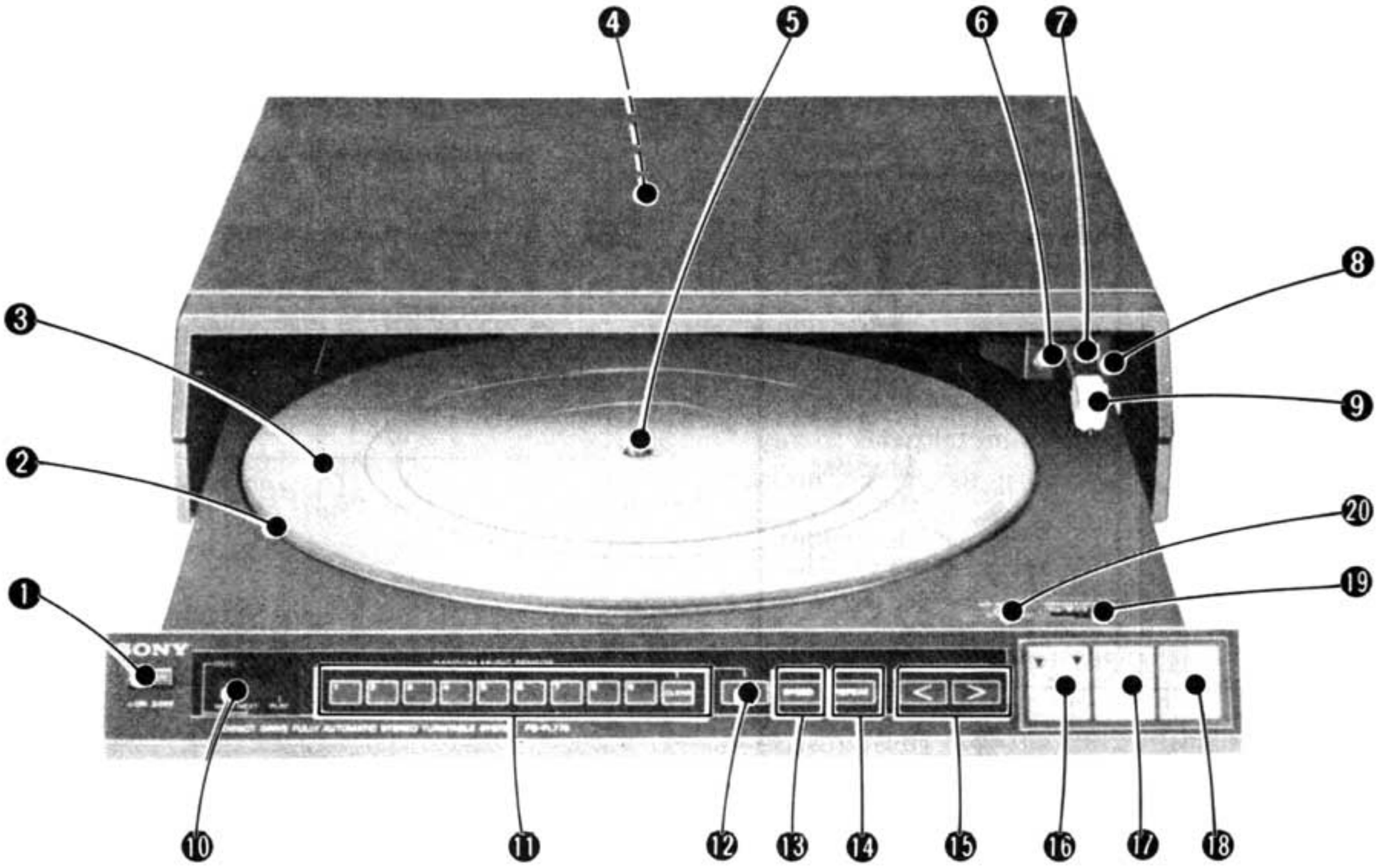

❶ Power switch

❷ Platter

❸ Rubber mat

❹ Photo detector
Detects the record size (30 cm, 25 cm and 17 cm) and how many selections are on a record, by searching for blank spaces between selections when the module closes.

❺ Center spindle

❻ Tonearm position indicator

❼ Tonearm

❽ Cartridge locking screw

❾ Cartridge

❿ Display window
The number of the selection being played, the programmed selections for RMS play, etc. are displayed in this window.

⓫ RMS programming keys and CLEAR key
Used for programming the selections to be played in the desired sequence. Press the CLEAR key to cancel the program.

⓬ SKIP key
Press this key to skip a selection during play.
This key is also used for AMS (Automatic Music Sensor) play.

⓭ SPEED selector and indicators
Press this key when a 45 rpm record is to be played. Press it again for a 33⅓ rpm record. Corresponding indicator illuminates.

⓮ REPEAT key and indicator
Press this key to repeat play. The indicator illuminates. To cancel the repeat play, press this key again.
You can also use this key to repeat the selections programmed by the RMS function.

⓯ ARM TRANSPORT keys
To move the tonearm inward, press the ◁ key, and to move outward, the ▷ key.

⓰ ▼/▼ ARM LIFTER key
This key lifts and lowers the tonearm. When the tonearm is lowered, the turntable starts rotating.
This key does not function when the tonearm is in the arm rest position.

⓱ START/STOP key and indicator
Press to start the record playing. The play indicator illuminates. To stop during play, press it again.

⑱ OPEN/CLOSE key
With one touch of this key the turntable module automatically opens for loading a record. With another touch the module automatically closes.

⑲ SENSITIVITY selector
Normally set this selector to M. When the number of the selections detected is not correct, set the selector to either H or L.

⑳ DP ADJUST (drop-point adjustment) opening

Rear panel

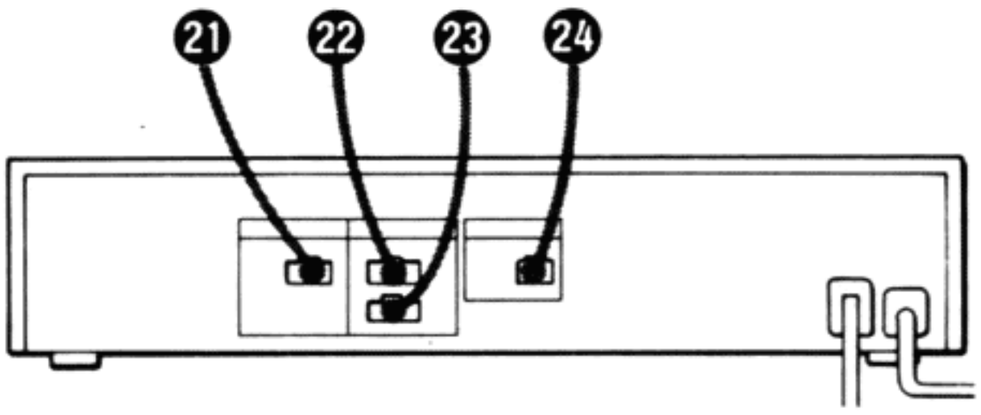

㉑ SYNC connector
Connect to the synchro connector of the Sony cassette deck for synchronized recording.

㉒ CONTROL S connector
Use this connector for total audio system remote control. For details, refer to the Operating Instructions of the optional Sony ST-V77/V77L system control tuner.

㉓ CONTROL S connector
Use this connector for total audio system remote control. For details, refer to the Operating Instructions of the optional Sony ST-V77/V77L system control tuner.

㉔ FUNCTION CONTROL connector
Connect this connector to the PHONO direct function connector of the optional ST-V77/V77L system control tuner for direct function.

TRACKING FORCE FINE ADJUSTMENT

The tracking force has been correctly adjusted at the factory. Make fine adjustment only when the tracking force is so light that the stylus skips grooves.

1 Depress the power switch (⏏ ON), then press the OPEN/CLOSE key to open the module.
2 Press the ⧏ ARM TRANSPORT key to move the tonearm toward the center spindle.
3 Slide the tracking force adjustment lever.
Be sure that the stylus guard is installed.

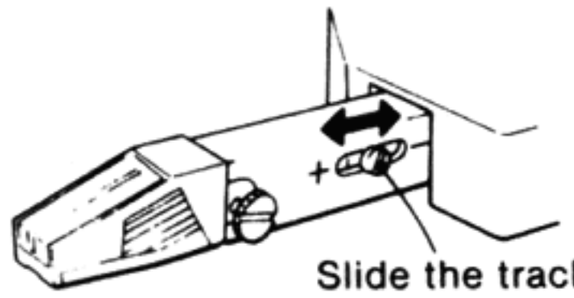

Slide the tracking force adjustment lever towards + (forward) for heavier tracking force or towards – (backward) for lighter tracking force

4 Press the ⧐ ARM TRANSPORT key to move the tonearm to the arm rest position.

TONEARM DROP-POINT ADJUSTMENT

The tonearm's drop-point during auto play, AMS play or RMS play has been adjusted at the factory. Adjust this if the stylus does not lower correctly at the beginning of the desired selection.

1 Press the OPEN/CLOSE key to open the module.
2 Insert the supplied screwdriver into the DP ADJUST opening.
To move the drop-point inward, turn the screw counterclockwise (towards IN).
To move the drop-point outward, turn the screw clockwise (towards OUT). Do not turn it so far clockwise that the stylus tip cannot make contact with the record.

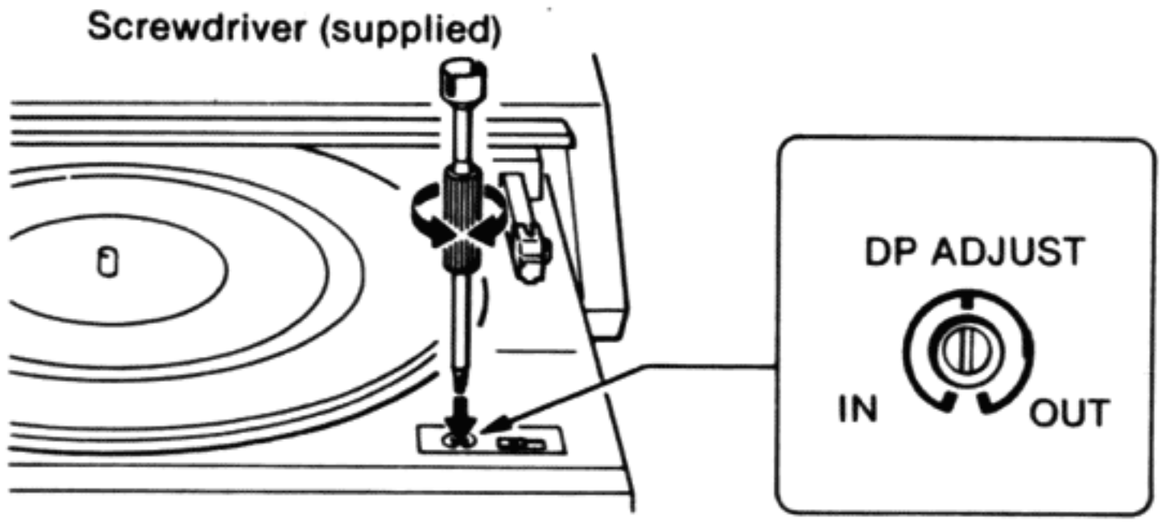

3 Check if the drop-point is correctly adjusted by lowering the tonearm to the beginning of a selection in the middle of the record, using the AMS function. (Checking the drop-point for the first selection is not sufficiently accurate.)

If the drop-point is correct for one selection, it will also be correct for all the selections.

RECORD PLAYING

AUTO PLAY

—To begin record play from the beginning of the record

This turntable's photo detector detects the record size : 30 cm (12 inch), 25 cm (10 inch) or 17 cm (7 inch), and the number of the selections on the record **when the module closes.** Therefore **after turning the power on, be sure to press the OPEN/CLOSE key to open the module** completely so that the detector is on standby.

Follow the numbered sequence.

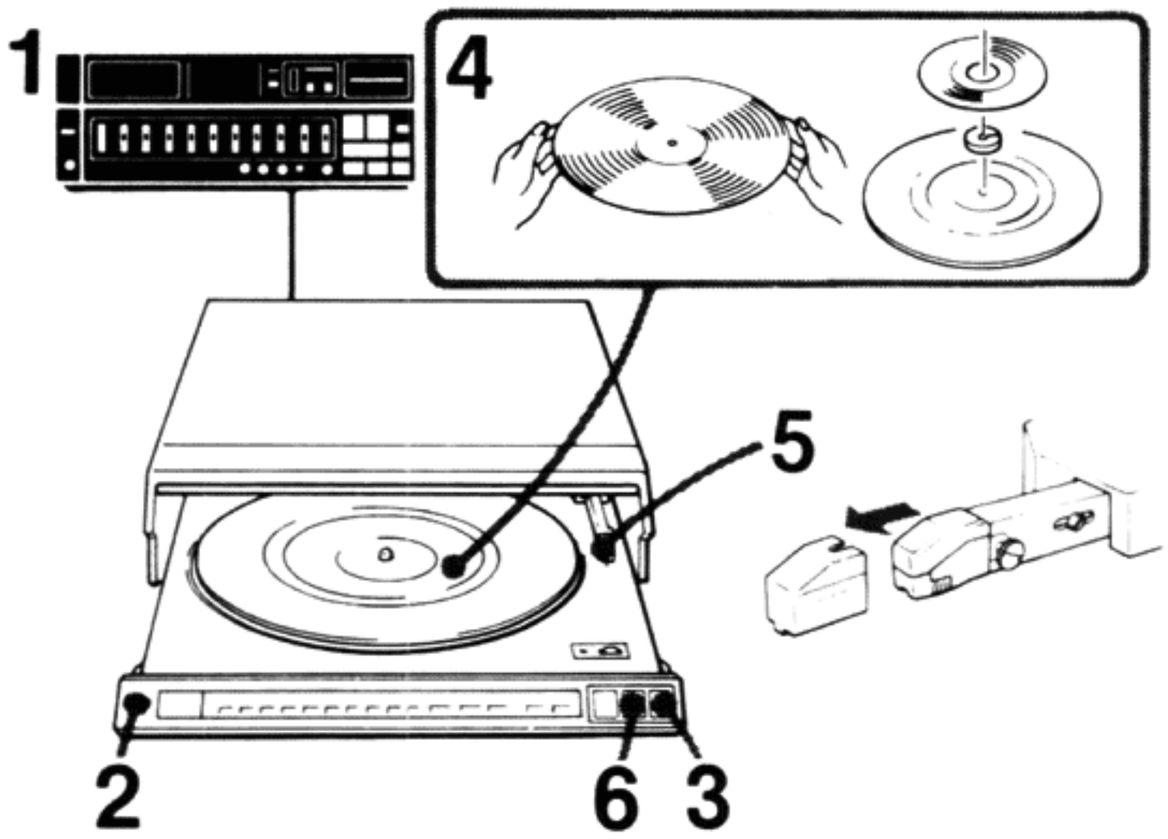

1 Turn on the amplifier, lower the amplifier volume and set the input selector to PHONO.
2 Depress the power switch (⏏ ON).
3 Press the OPEN/CLOSE key to open the module.
4 Place a record on the platter. For 45 rpm record playing, see below.
5 Remove the stylus guard.
6 Press the START/STOP key. Play will begin.

When the tonearm reaches the end of the record, it will automatically return to the arm rest position.
Turn off the power switch after the tonearm returns to the arm rest position.

45 rpm record playing

- Put the supplied 45 rpm adaptor over the center spindle and place a record on the platter.
- Press the SPEED selector so that the 45 indicator illuminates.

Notes

- If the power switch is turned off while the tonearm is returning to the arm rest position, when you press the power switch the next time the tonearm will return to the arm rest position. While the tonearm is moving, the START/STOP key is not activated.

RMS (RANDOM MUSIC SENSOR) PLAY

You can play selections on one side of the record in the desired sequence, which has been programmed using the RMS key.

1 Press the OPEN/CLOSE key to open the module, put on a record and select the record speed.
2 Press the RMS keys in the sequence in which you want to listen to the selections.
Each time the RMS key is pressed, the selected number is displayed once in the right position in the display window, immediately moves to the left position, and the cursor blinks in the right position to indicate another selection can be programmed.
Up to 15 selections can be programmed.

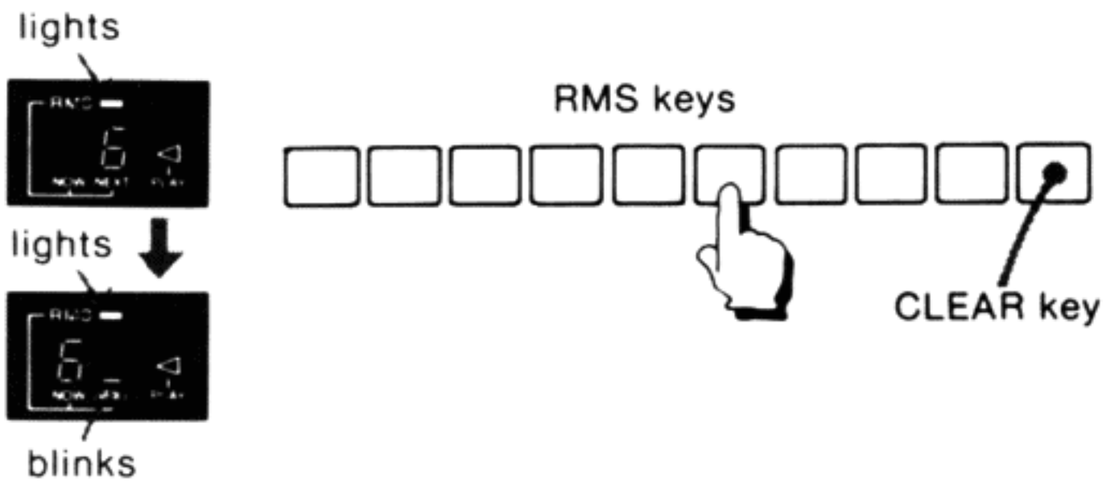

To change the program, press the CLEAR key and input the selections again.

3 Press the START/STOP key.
The module closes and play begins from the first-programmed selection. The RMS indicator lights during RMS play.

The next selection to be played

When searching the next selection, the left digit blinks rapidly.

Current selection being played (blinks slowly)

At the end of the last-programmed selection, the tonearm will return to the arm rest position automatically.
If you wish to play the same selections in the same sequence again, press the START/STOP key.

To change the programmed sequence

Press the CLEAR key when the tonearm is on the arm rest position.
The display will change to 00 and the programmed sequence will be erased. Then press the RMS keys again in the desired sequence.

Automatic editing function of the RMS program
If a selection number which does not exist on the record is selected with the module open, that number will be erased automatically when the module closes.
For example, if you have pressed the 6, 2, 8, 5 and 7 RMS keys in that order, for a record containing only 6 selections, numbers 8 and 7 will be erased when the module closes and the 6th, 2nd and 5th selections will be played.

If an incorrect RMS keys is pressed with the module closed, the number of the key will not be displayed.
This is an automatic editing function of the RMS program.
If the pressed RMS keys are all incorrect, the "E" (error) indicator will flash several times, or the display will not change from 00.

To cancel the RMS program
Press the ARM TRANSPORT keys or the OPEN/CLOSE key during play, or press the CLEAR key when the tonearm is in the arm rest position. The display will change to 00 when the tonearm is in arm rest position and the programmed sequence will be erased.

TO LIFT UP THE STYLUS DURING RMS PLAY

To lift up the stylus for a moment and then start playing from the same point, press the ARM LIFTER key. To lower the tonearm onto the record, press the ARM LIFTER key again.

TO STOP DURING RMS PLAY

Press the START/STOP key. The tonearm will return to the arm rest position.
When the START/STOP key is pressed again, the RMS play will restart from the beginning.

TO SKIP SELECTIONS DURING RMS PLAY

Press the SKIP key during play. Each time the SKIP key is pressed, the next selection ahead is played.

TO REPEAT RMS PLAY IN THE PROGRAMMED SEQUENCE

Press the REPEAT key either before or after starting RMS play. At the end of the last-programmed selection, the tonearm will return to the first-programmed selection automatically, then play will restart.
To stop during repeat play, press the REPEAT key. When the last-programmed selection has been played, the tonearm will return to the arm rest position and repeat function will be cancelled.
If you press the START/STOP key during repeat play, play will stop immediately, the tonearm will return to the arm rest position and the repeat function will be cancelled.

AMS (AUTOMATIC MUSIC SENSOR) PLAY
—To begin record play from the desired selection

1 Press the OPEN/CLOSE key to open the module, put on a record and select the correct record speed.
2 Press the SKIP key repeatedly until the number of the selection from which you want to start play is displayed.
Each time the SKIP key is pressed, the number of the selection displayed increases by one, up to 15, then returns to 01.

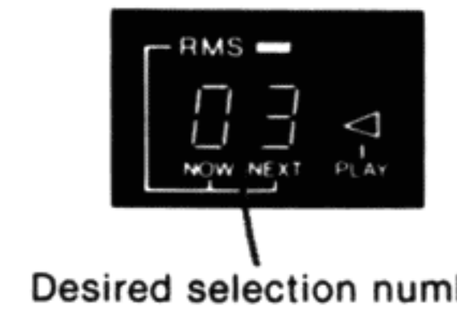

Desired selection number

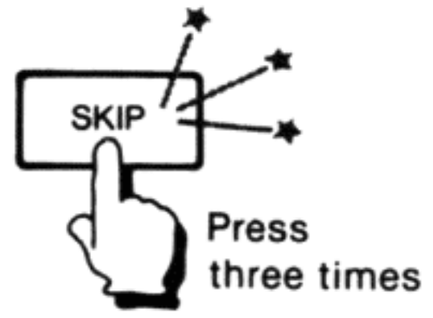

Press three times

3 Press the START/STOP key. The module closes, the tonearm searches for the preset selection and play begins.

While searching

blink

While playing

light

Note
If the selection number which does not exist (for example, "08" for a record which contains only 7 selections) is input with the module opended, the "E" (error) indicator appears and flashes several times, then "00" is displayed. In this case, input an appropriate selection number.

TO SKIP TO THE DESIRED SELECTION DURING PLAY
—Using the SKIP function

Press the SKIP key repeatedly during play until the number of the desired selection is displayed.
Each time the SKIP key is pressed, the next selection in advance is displayed, and when the last selection has been selected, the display reverts to 01.

The tonearm will lift up, search for the preset selection and play will start automatically.

Note
The SKIP function is inoperative while the tonearm is in the raised position or while the record is being played with the module open.

Error indicator

The "E" (error) indicator flashes several times and the display will change to 00 in the following cases.

- When the START/STOP key is pressed, but there is no record on the platter.
- When inappropriate selection numbers are set for AMS or RMS play with the module open, and the START/STOP key is pressed.
- When the OPEN/CLOSE key is pressed while the module is closing and the same button is pressed again before the module has opened completely, then the START/STOP key is pressed.

AUTO RECORD SIZE SELECTION SYSTEM

When the module closes, the photo detector searches over the record to detect the record size (30 cm, 25 cm or 17 cm) and sense how many selections are on the record, by detecting the blank spaces between selections. The selection number indicator changes rapidly from 01 to the number of the selection contained on the record. Up to 15 selections can be counted. The data is input into the memory of the microcomputer incorporated. This data will be erased from the memory when the OPEN/CLOSE key is pressed to open the module.

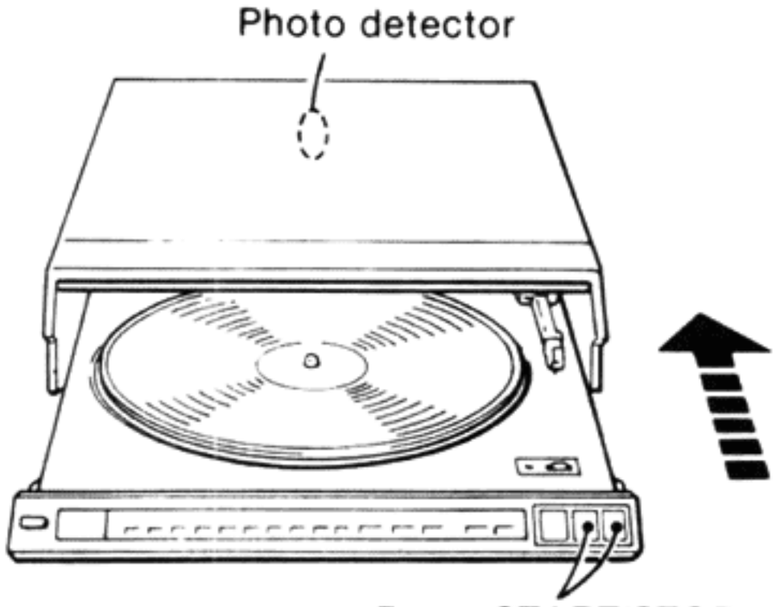

Note

If the OPEN/CLOSE key is pressed while the module is closing and the same key is pressed again before the module has opened completely, the record size and selections will not be detected and the "E" (error) indicator will flash several times when the START/STOP key is pressed later.

In this case, press the OPEN/CLOSE key to open the module completely and press it again to close the module.

SENSITIVITY selector

Since the photo detector searches for the blank spaces on a record, it cannot operate correctly if the blank spaces and music grooves are not in good condition. As a result, the RMS, AMS and skip functions may malfunction.

If the number of the selections detected is different from the number of the selections actually existing, change the position of the SENSITIVITY selector to either H (high) or L (low).

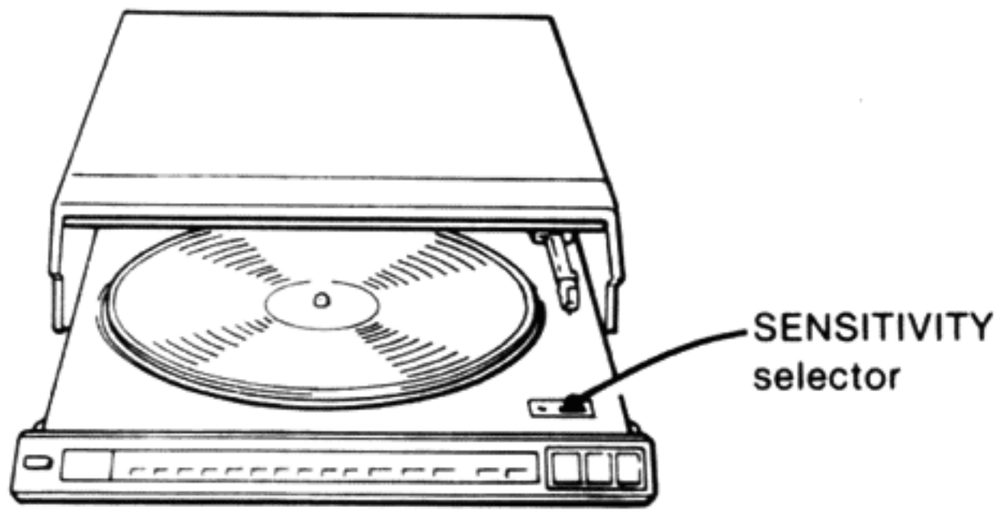

Why too few selections are detected :

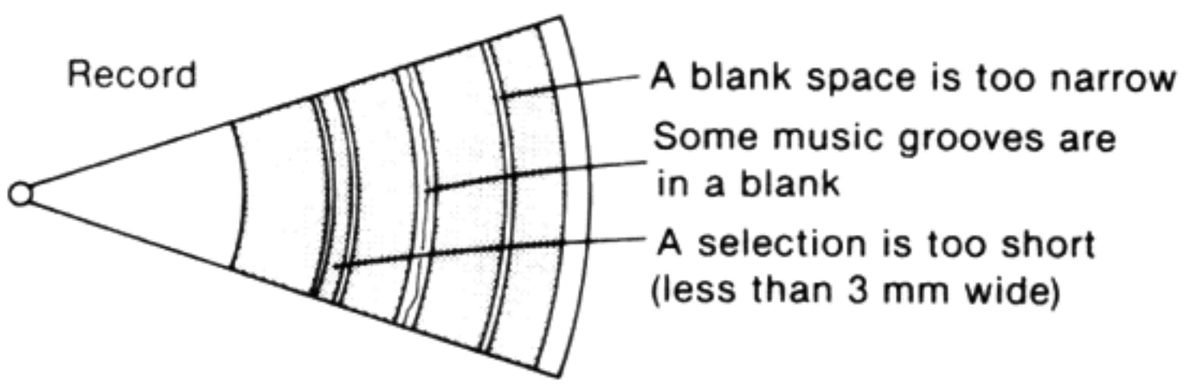

In this case, change the SENSITIVITY selector setting to H.

Why too many selections are detected :

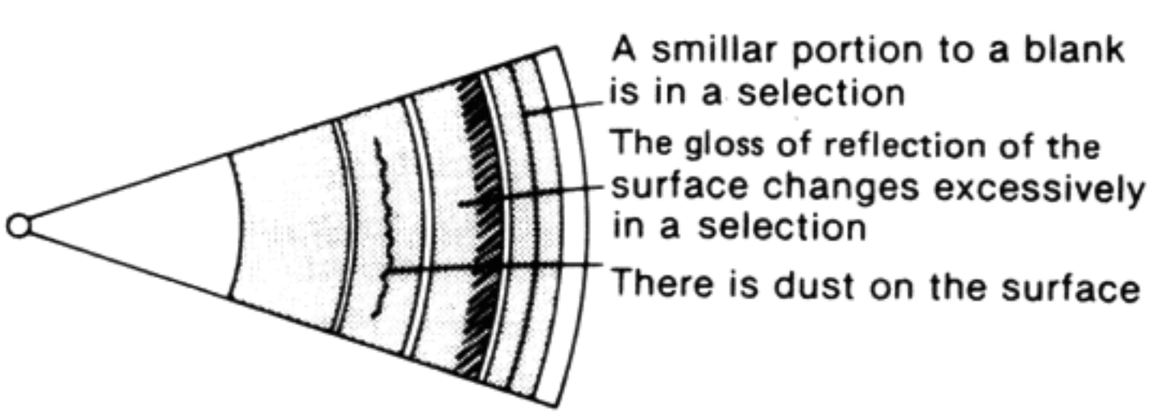

In this case, change the SENSITIVITY selector setting to L.

The presence and size of the special records, such as transparent, non-standardized, unusual shape or color (red, yellow, etc.) records, can be detected. However, the blank spaces sometimes cannot be searched, resulting in inferior RMS or AMS operation. Play these records manually, referring to "Manual play".

SECTION 1
OUTLINE

1-1. BLOCK DIAGRAM

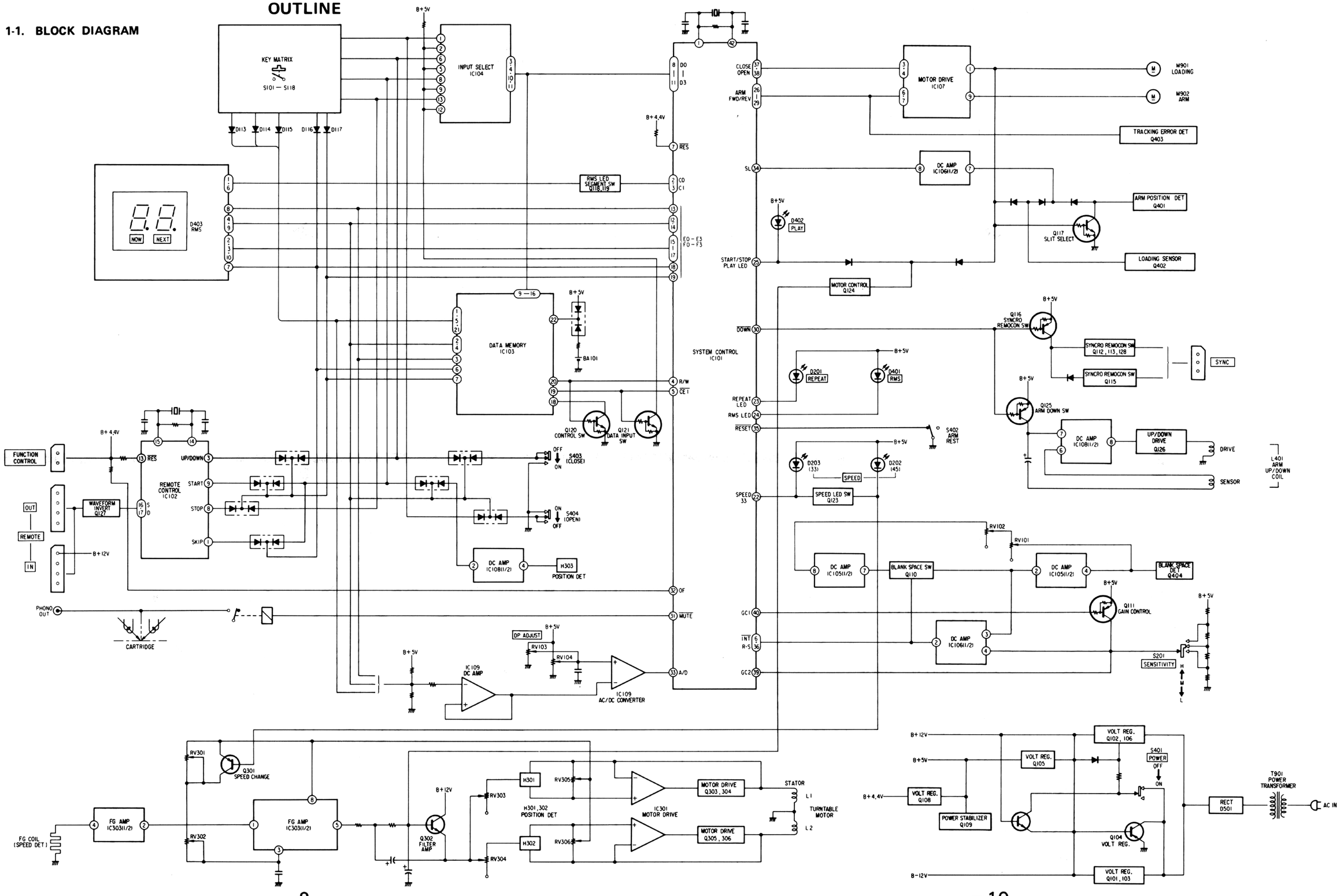

SECTION 2

DISASSEMBLY

2-1. REMOVAL

Note: Follow the disassembly procedure in the numerical order given.

TOP PLATE

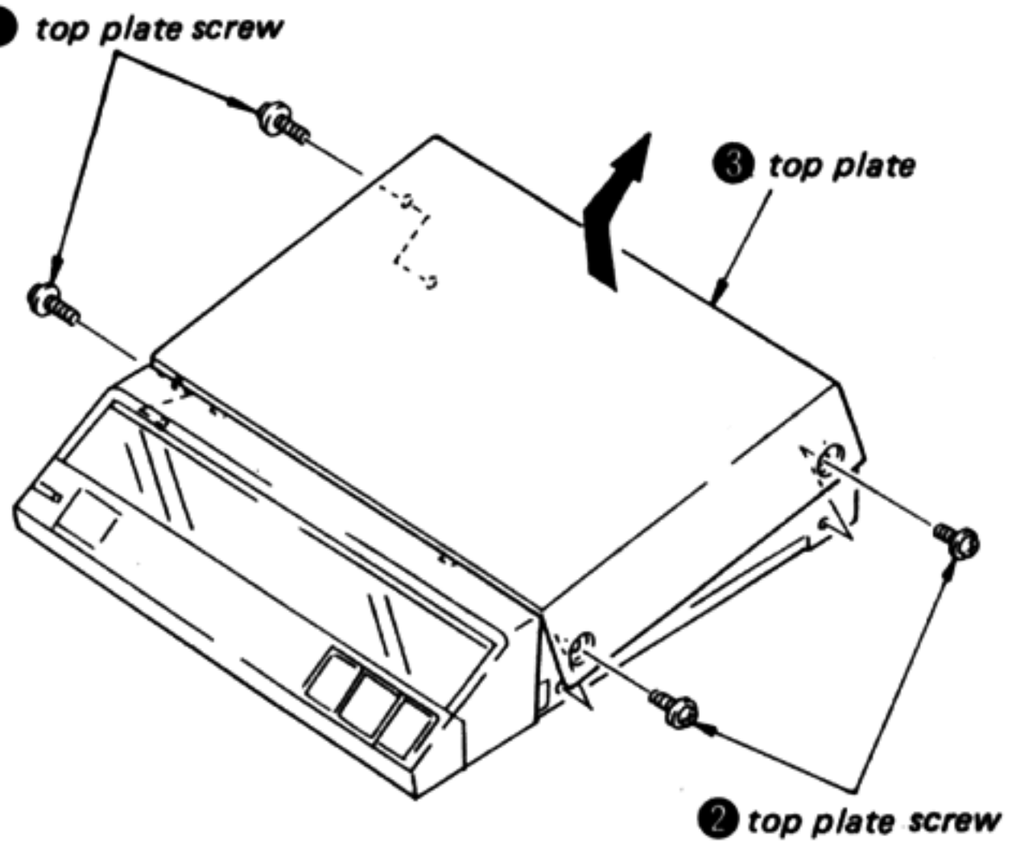

REINFORCEMENT (FRONT/UPPER)

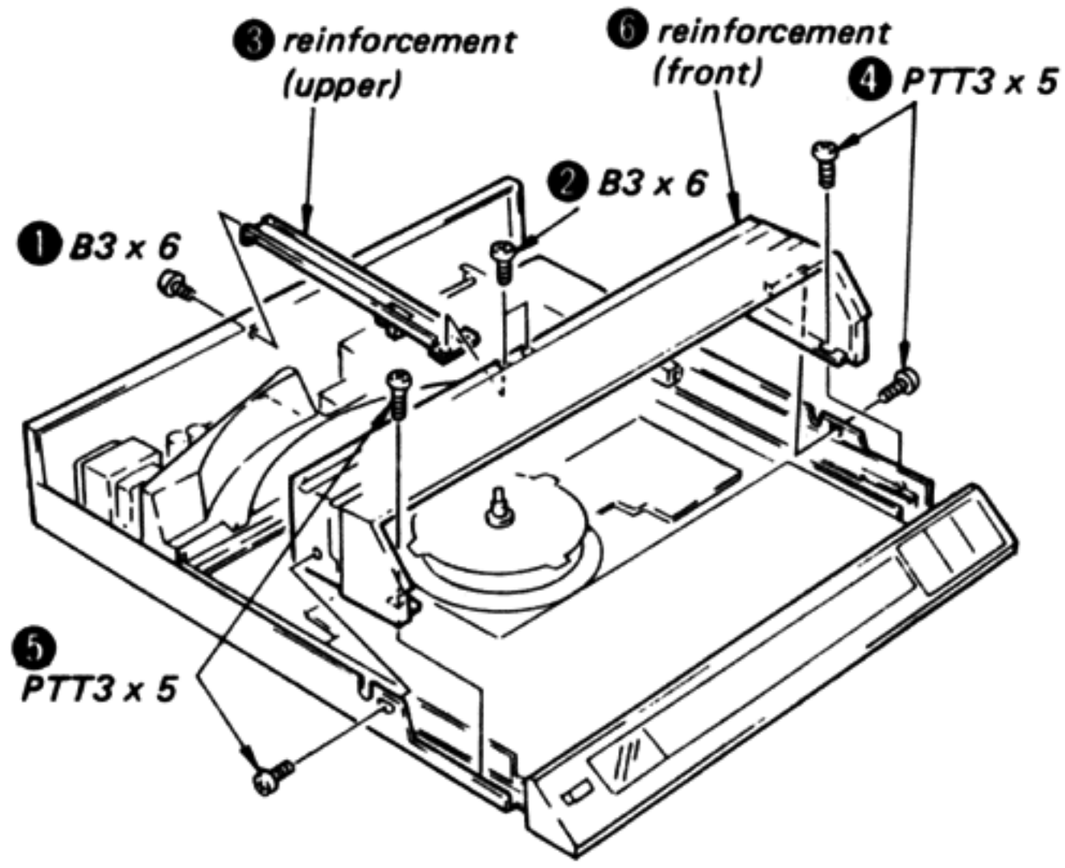

FRAME COVER (A)

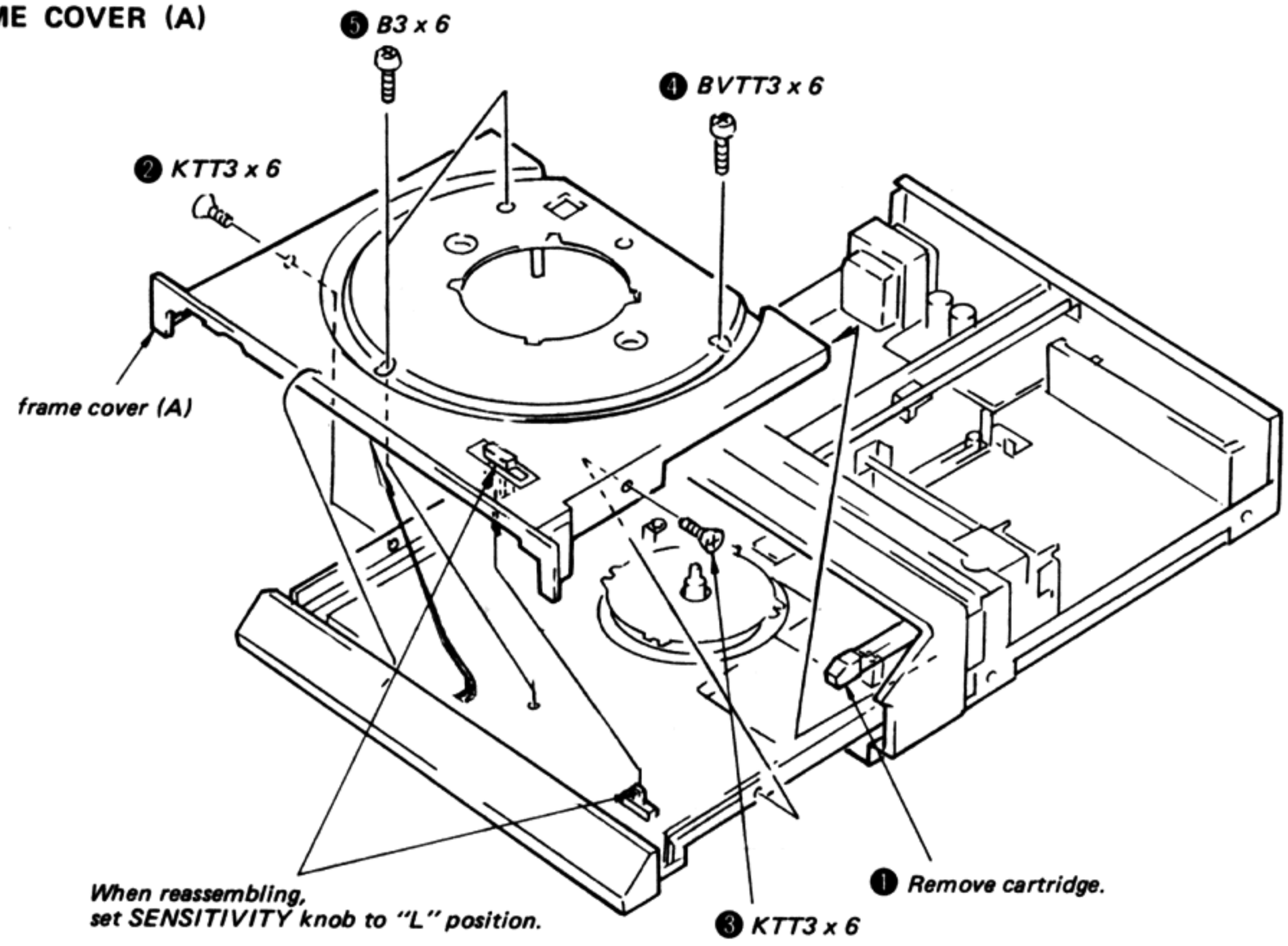

POWER SW BOARD, RMS BOARD

Power SW board: ❶ , ❷
RMS board: ❶ , ❸

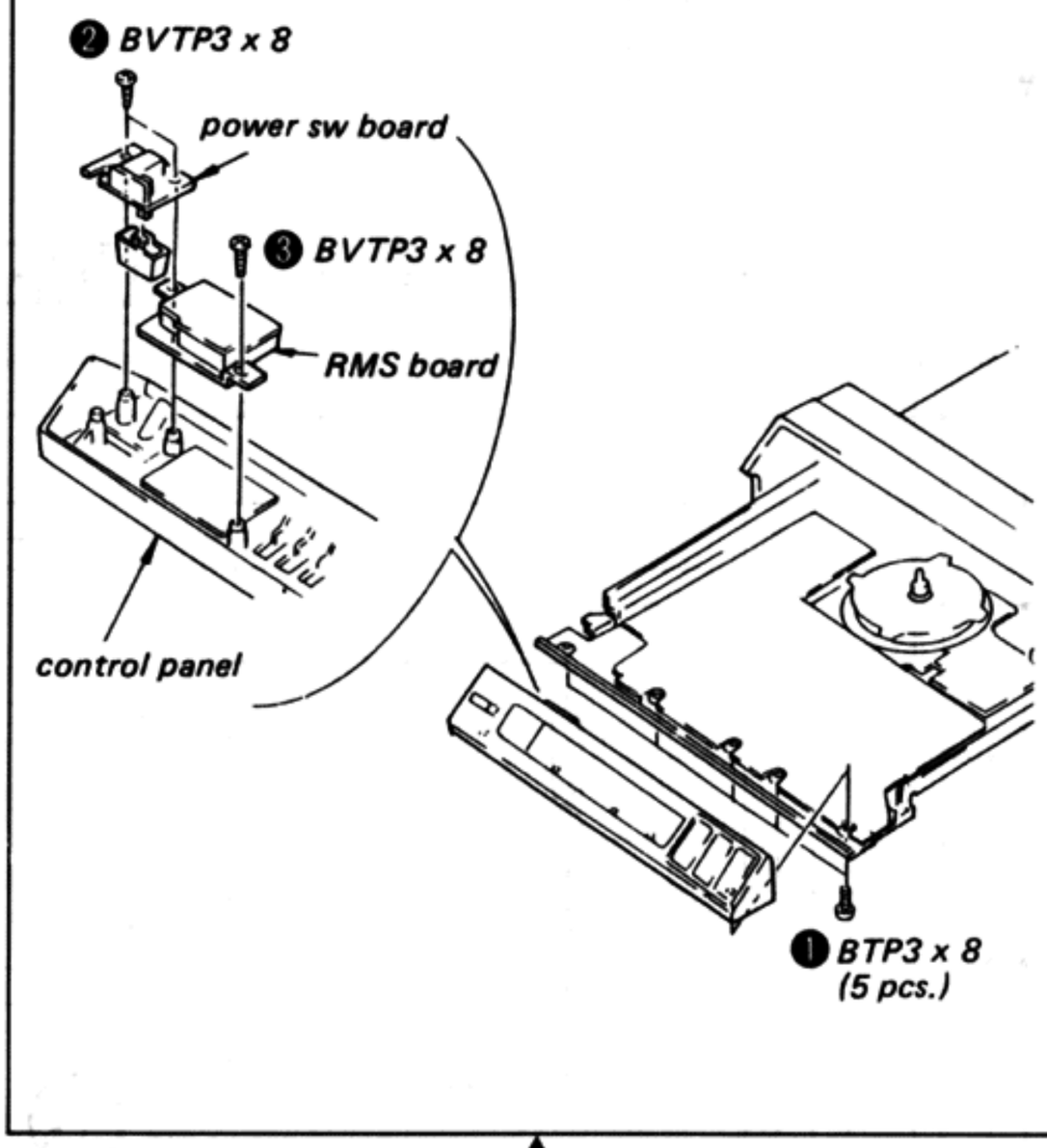

SYSTEM CONTROL BOARD

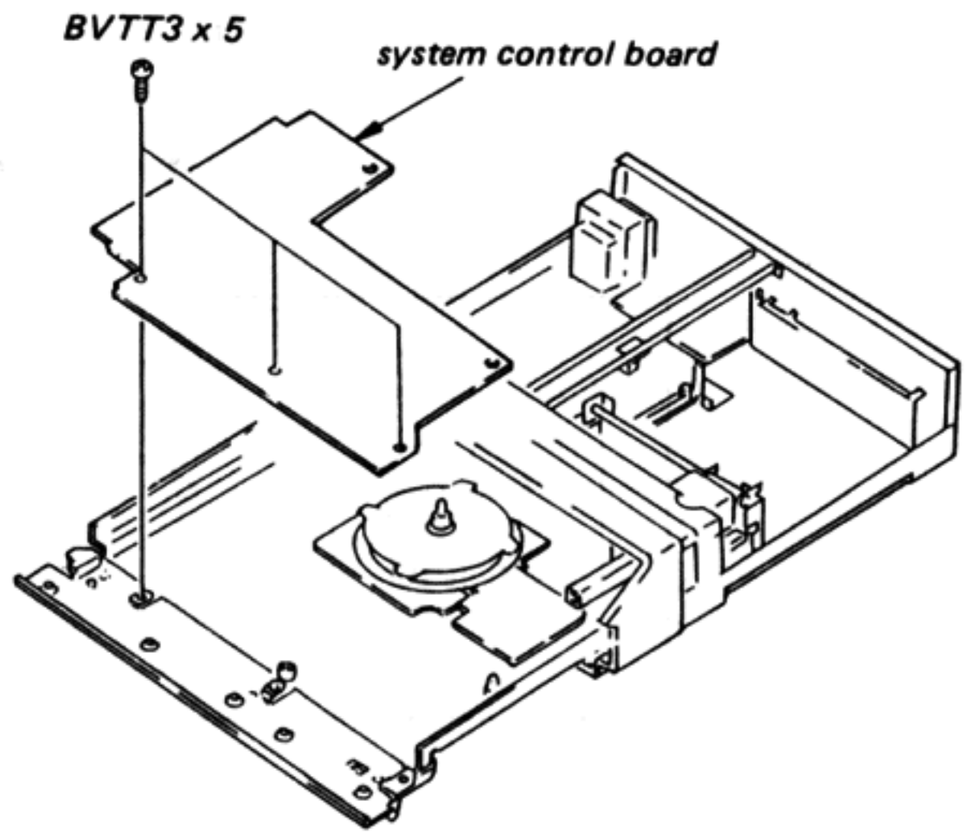

ROTOR, STATOR, FG BOARD, SERVO AMP BOARD

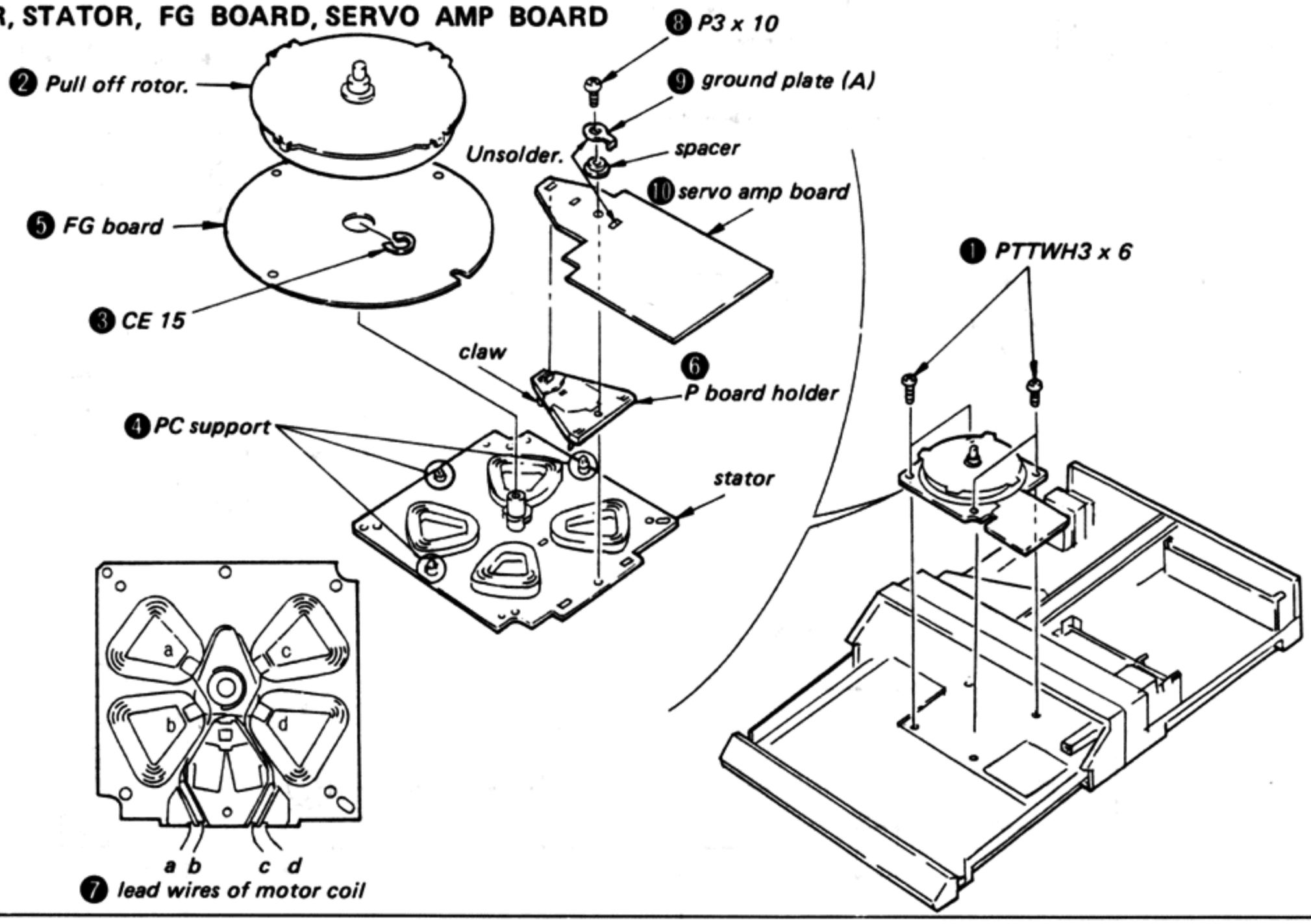

FRAME COVER (B)

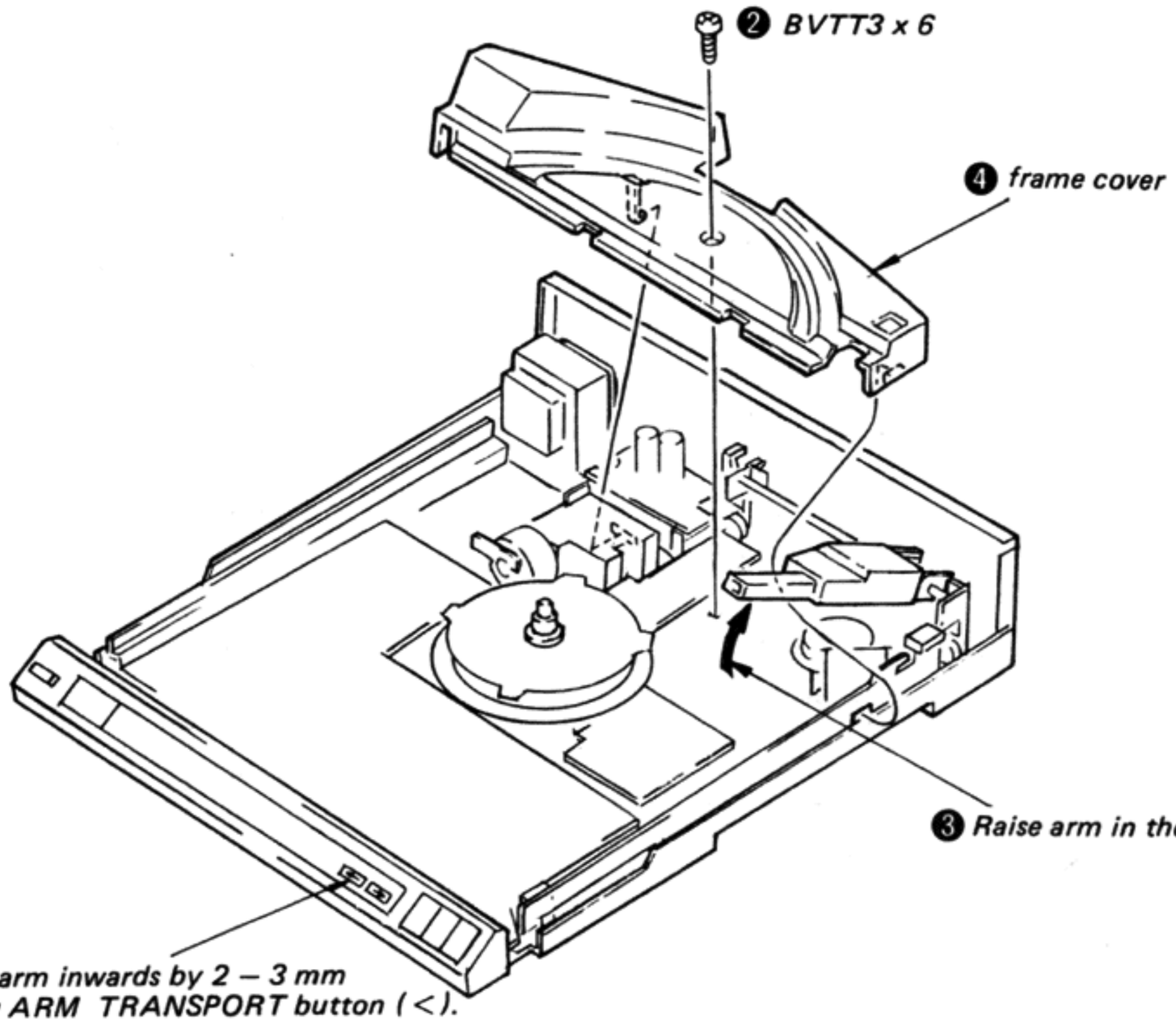

BOTTOM PLATE

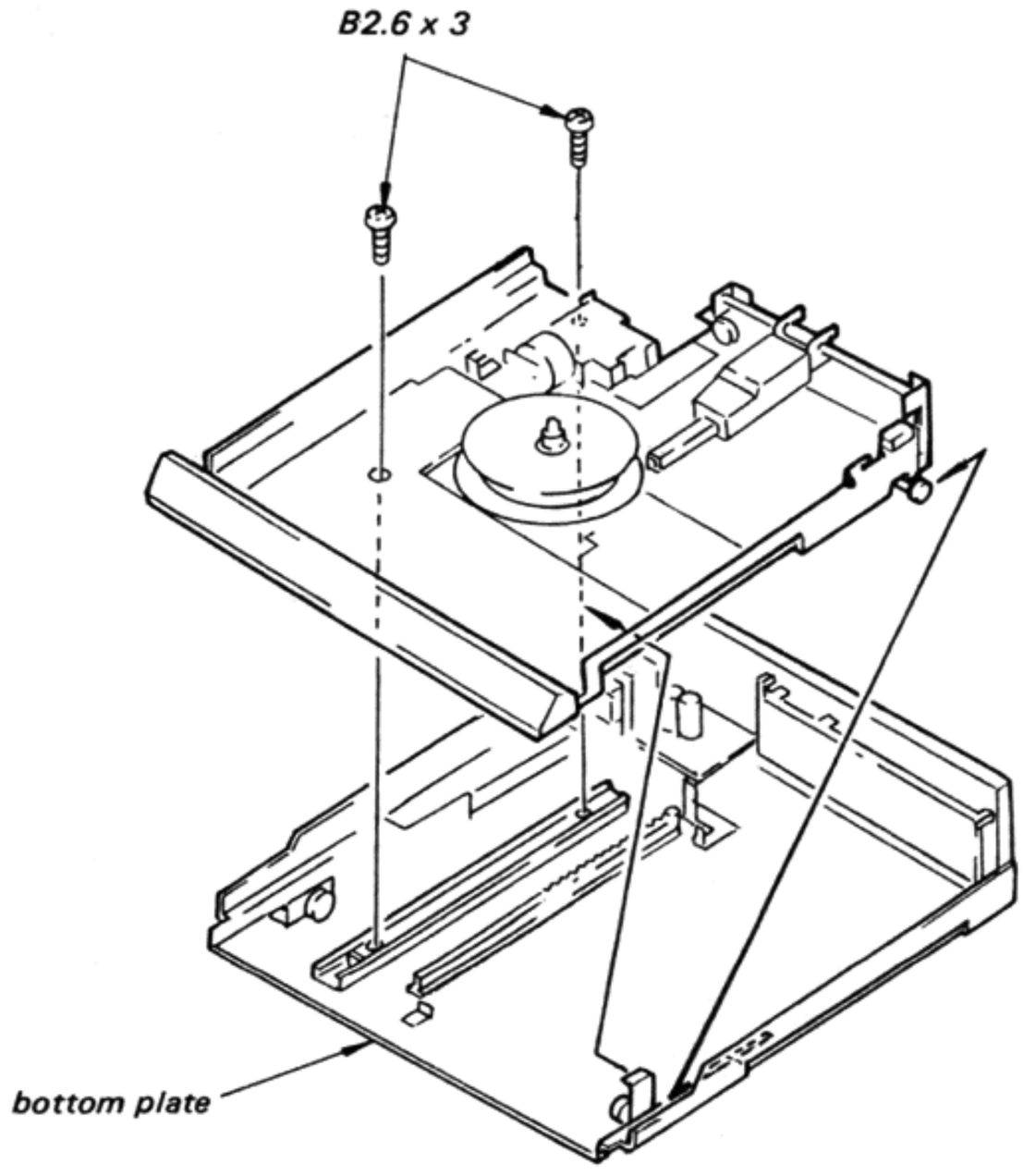

LOADING MOTOR (M901)

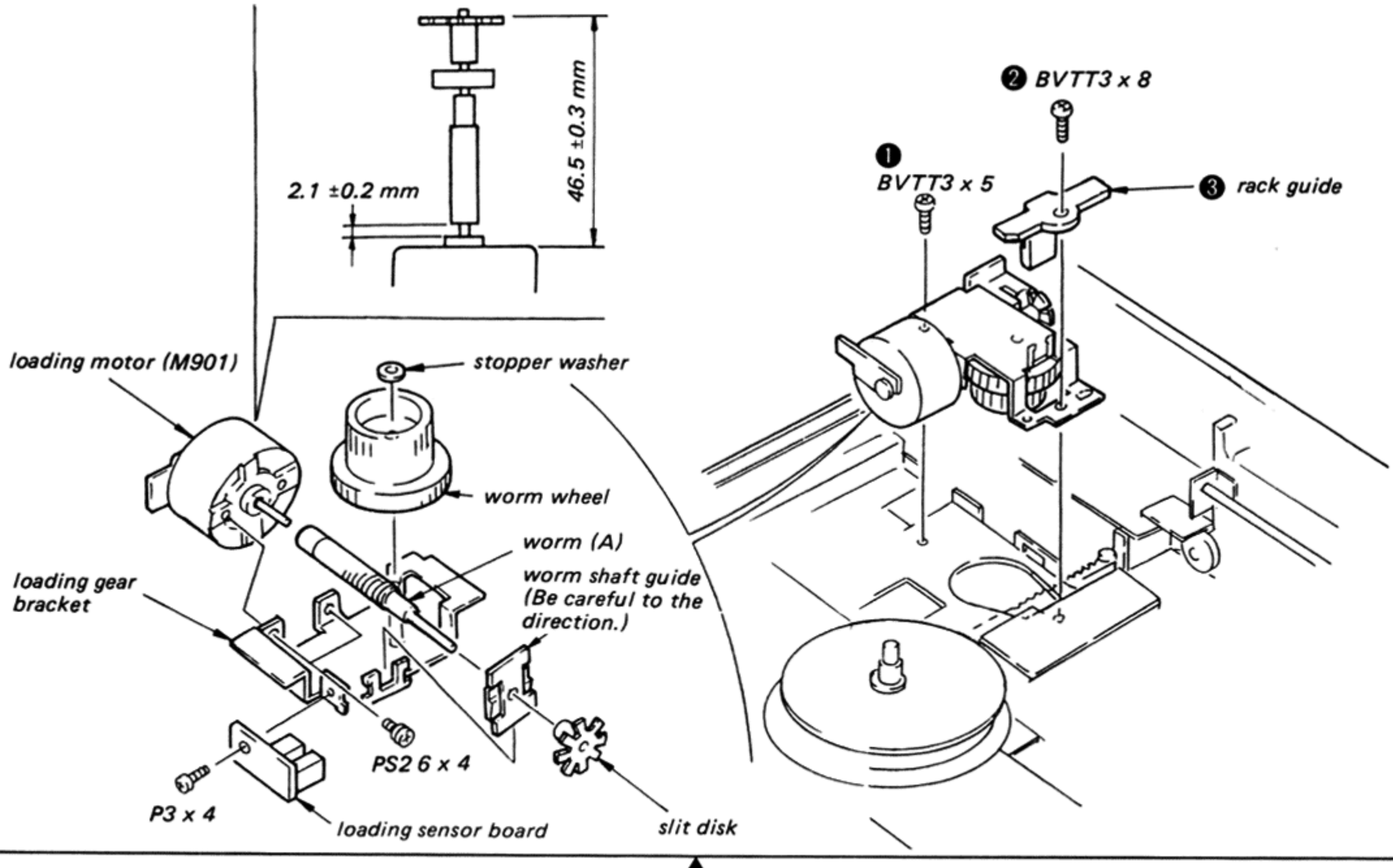

ARM MOTOR (M902)

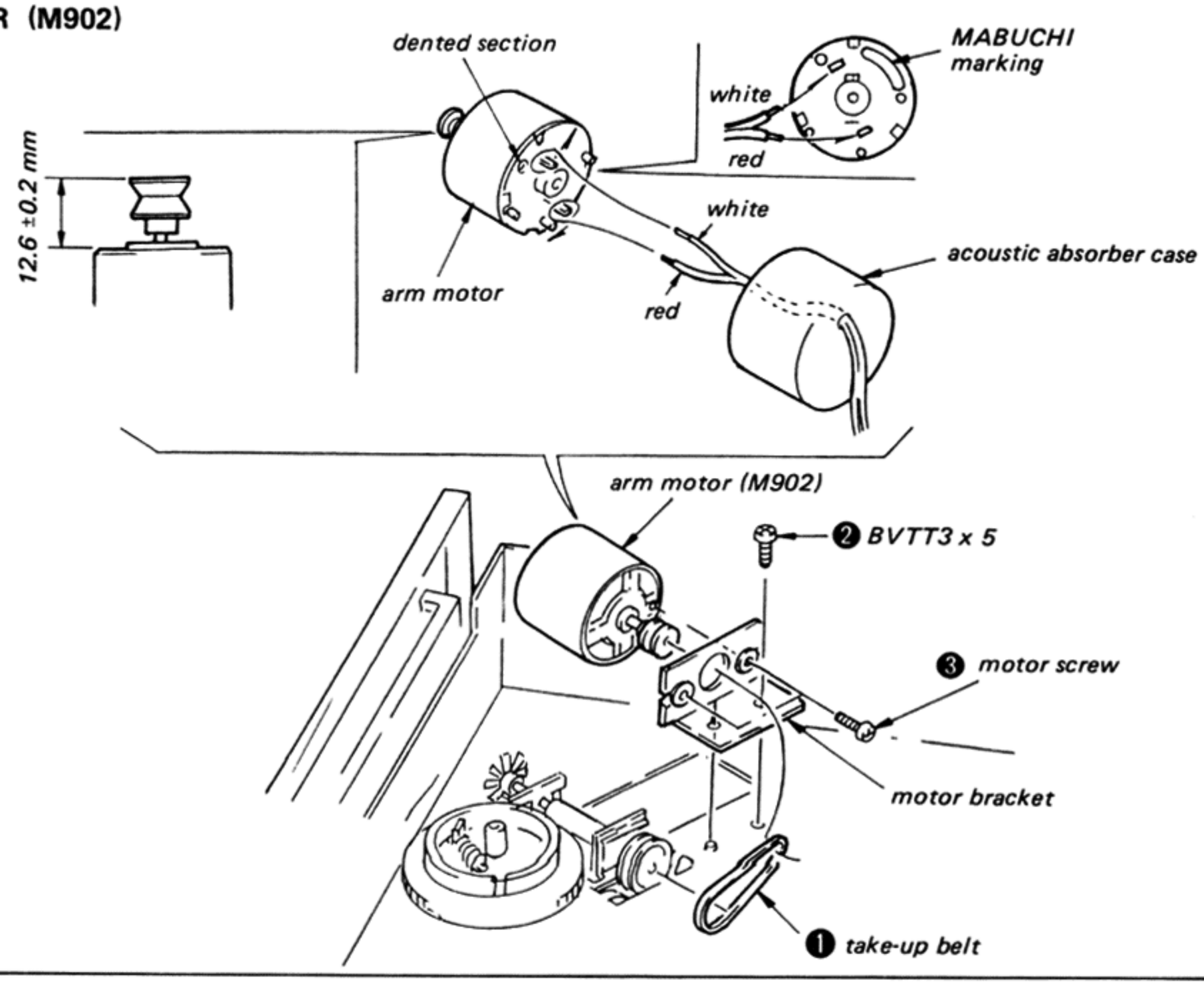

Remove top plate (see page 11).

TONEARM

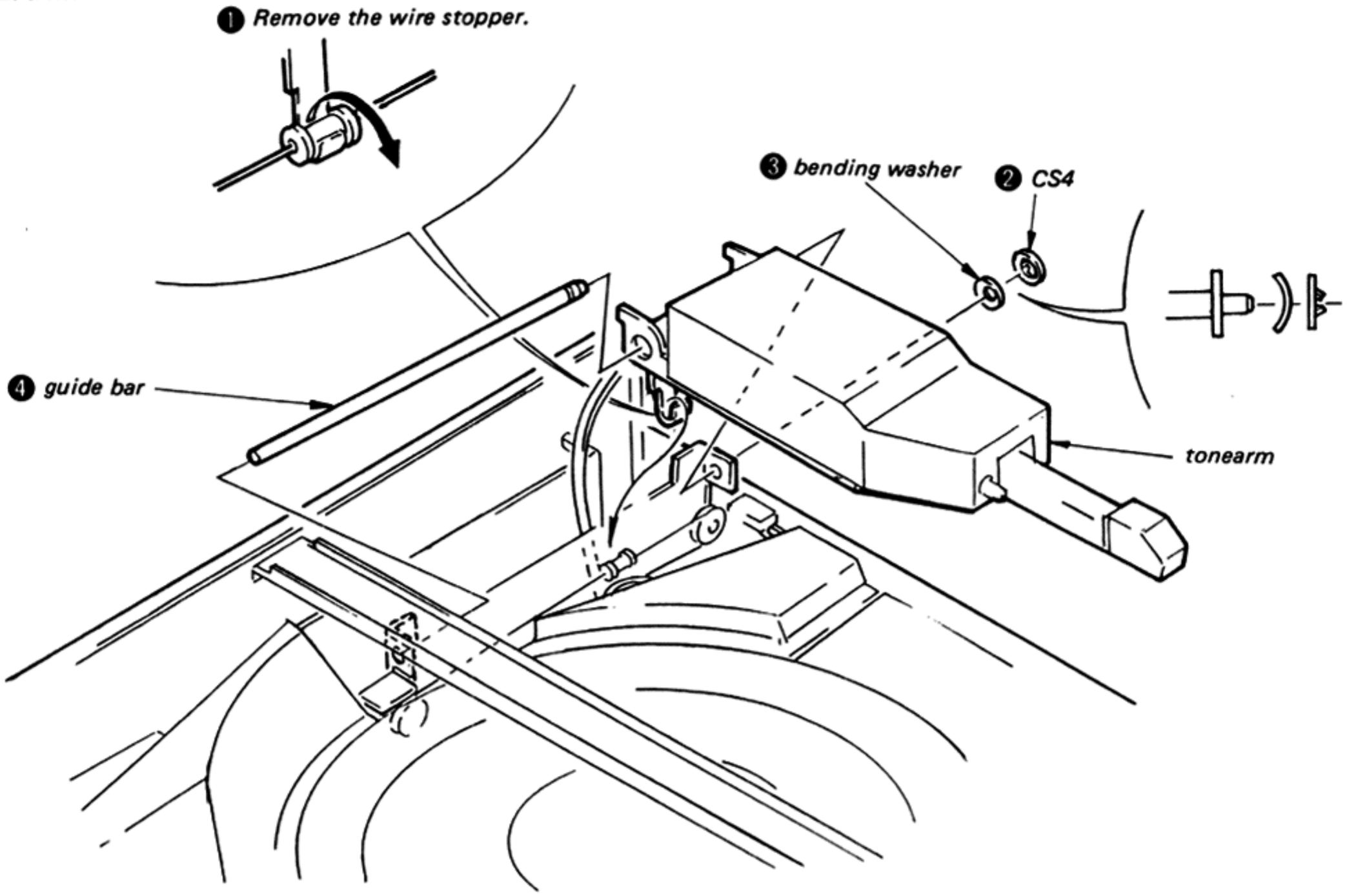

2-2. TONEARM ASSEMBLING

TONEARM ASSEMBLING (1)

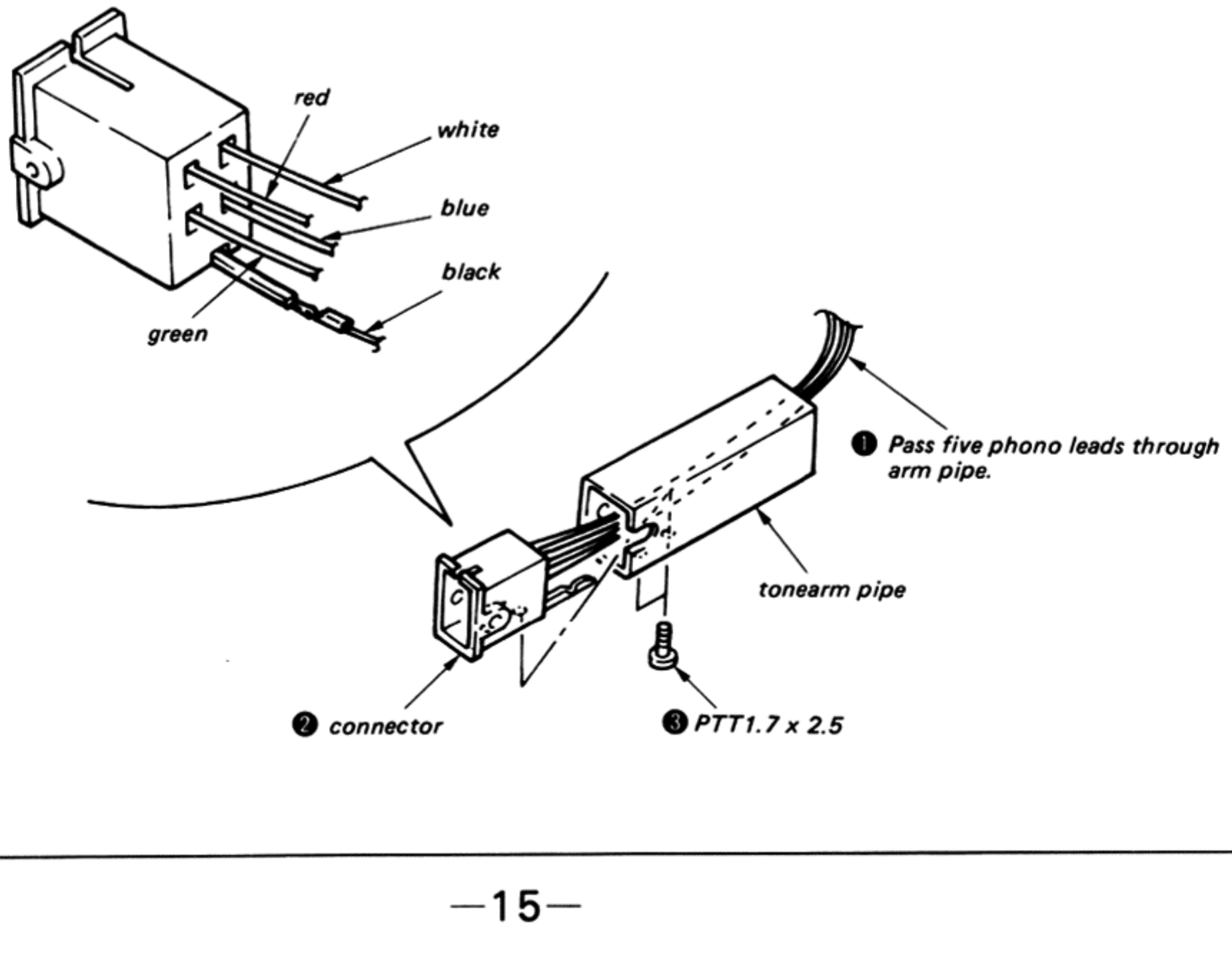

TONEARM ASSEMBLING (2)

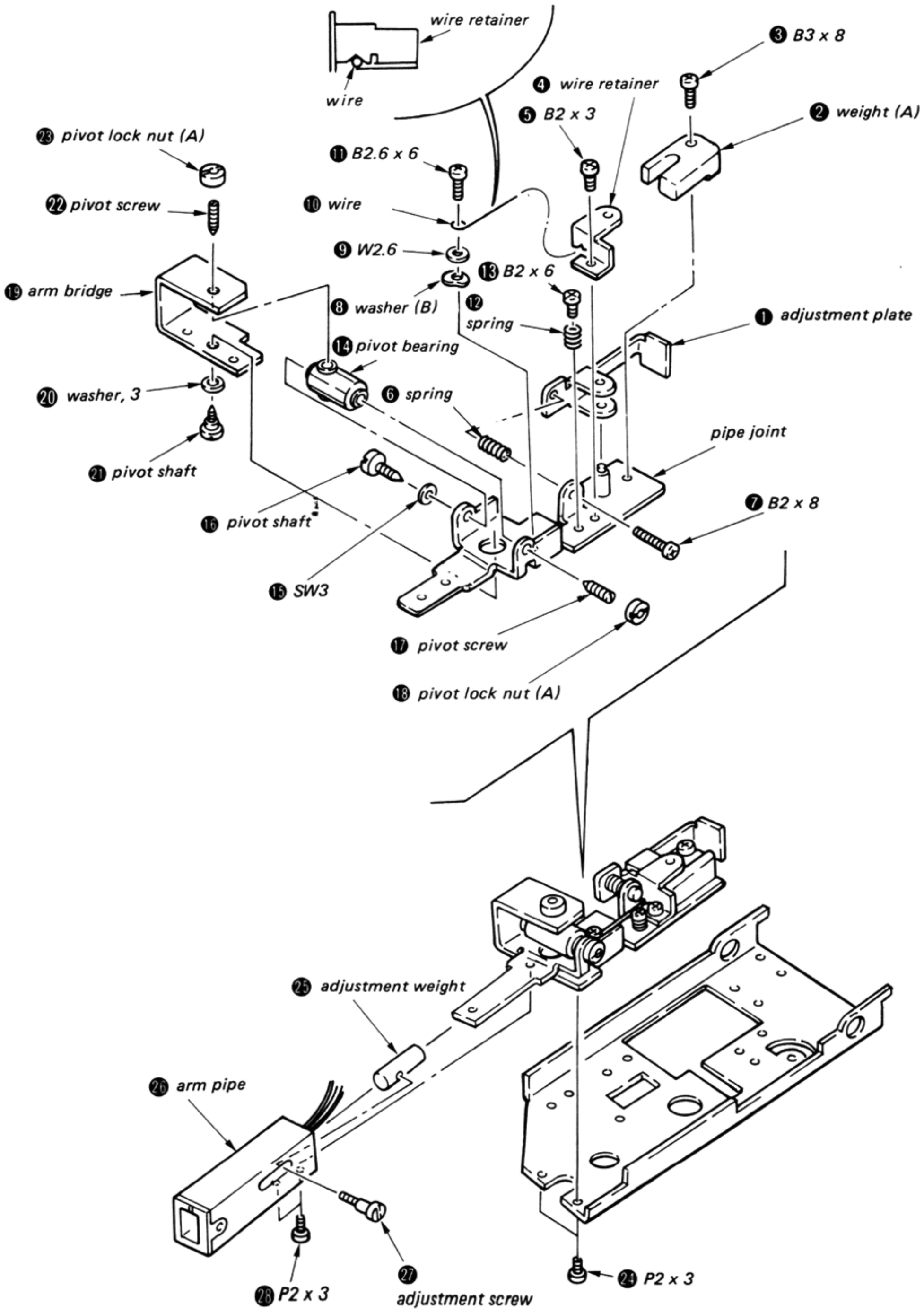

TONEARM ASSEMBLING (3)

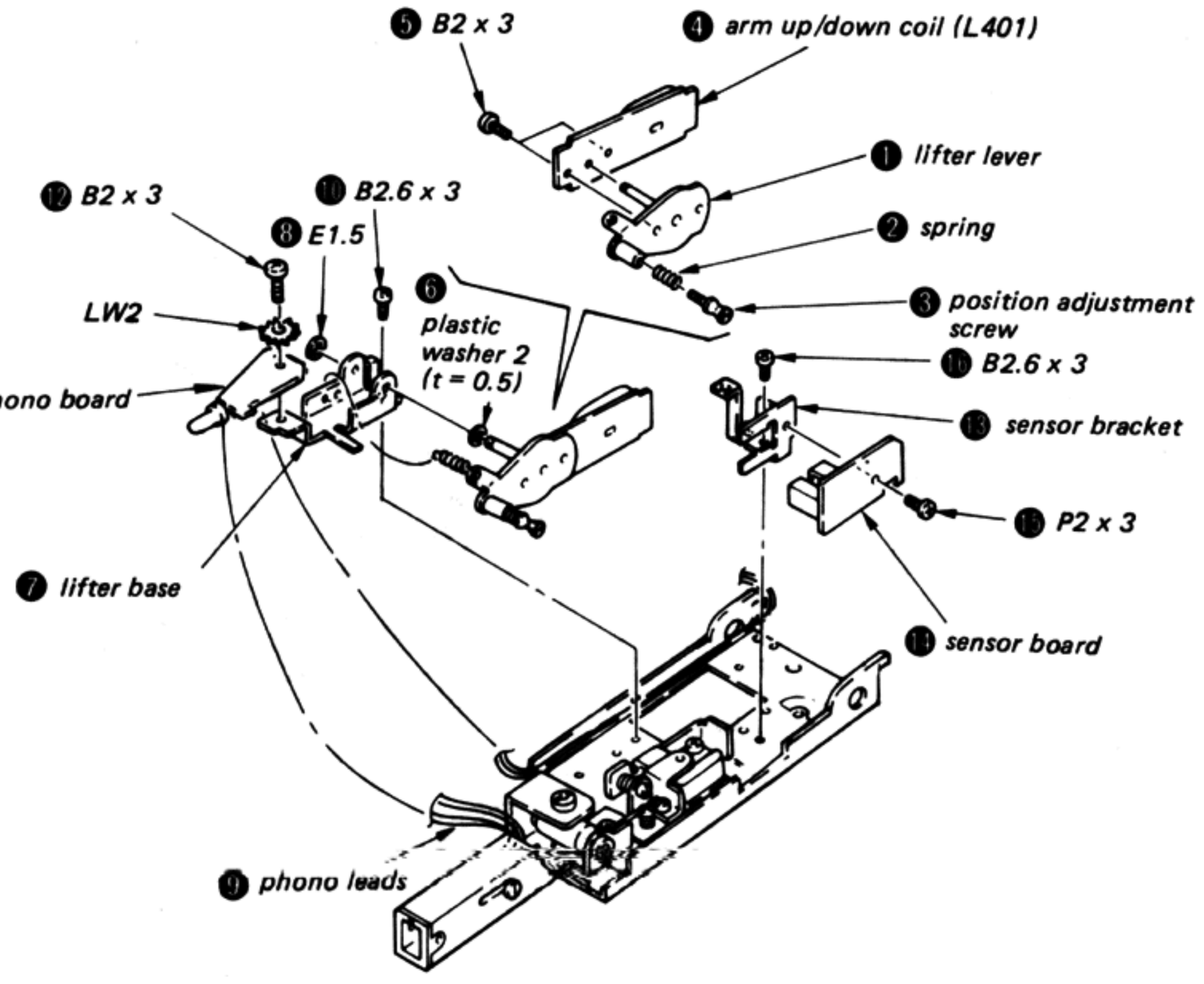

TONEARM ASSEMBLING (4)

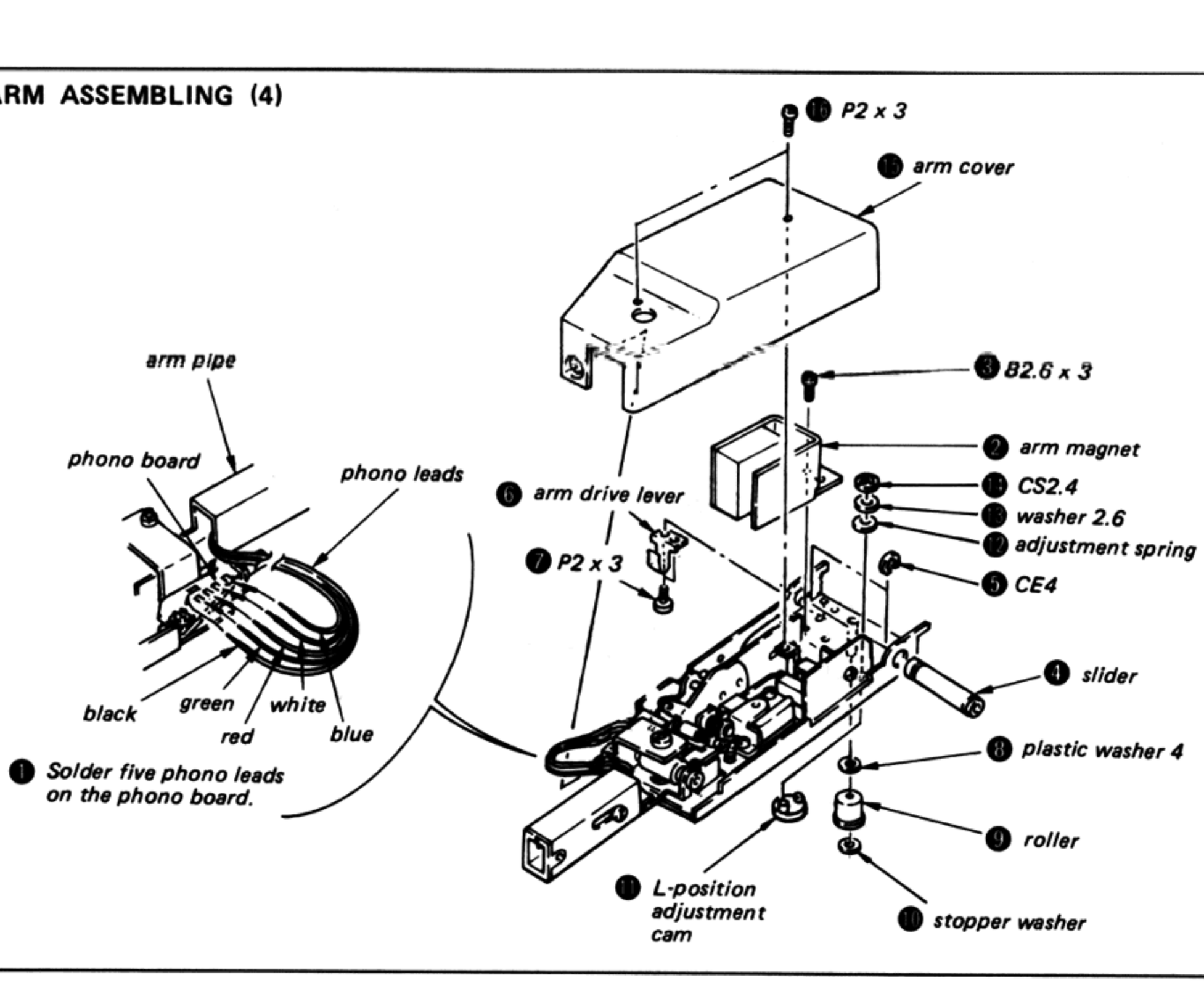

2-2. ARM DRIVE CORD STRINGING

1) Preparation

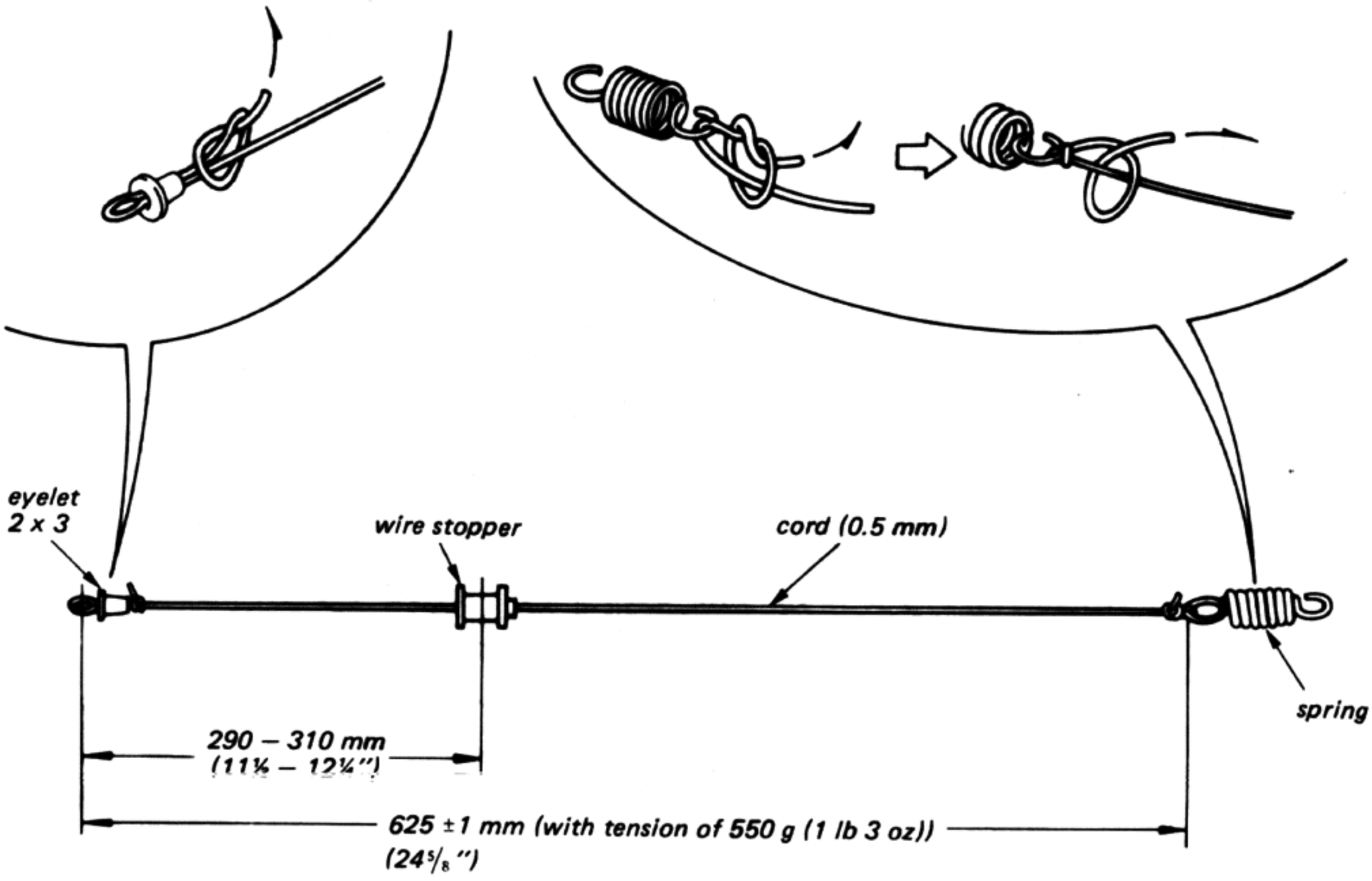

2) Stringing

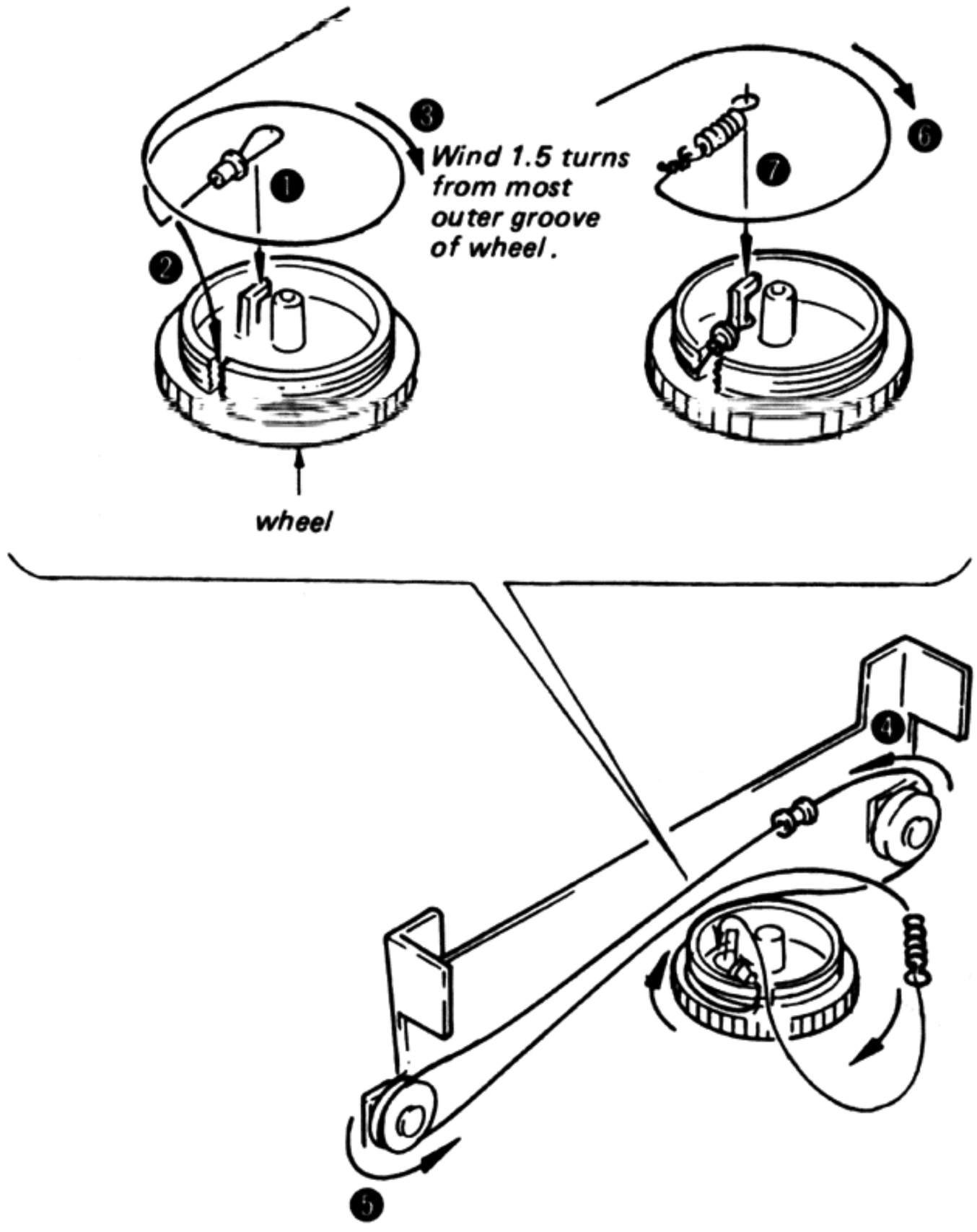

SECTION 3
ADJUSTMENTS

3-1. MECHANICAL ADJUSTMENTS

Note: Follow the adjustment procedure in the order given.

Stylus Height Adjustment

1. Put a record.
2. Press ARM TRANSPORT button (←) and move the arm inside the record groove.
3. Make sure that clearance Ⓐ is 3 – 8 mm (⅛ – 5/16 inches). If necessary, adjust the stylus height adjustment screw.
4. Press ARM TREATMENT button (→) and move the arm outside the record groove.
5. Make sure that the difference of height between step 3 and step 4 is within 2.5 mm (⅛").

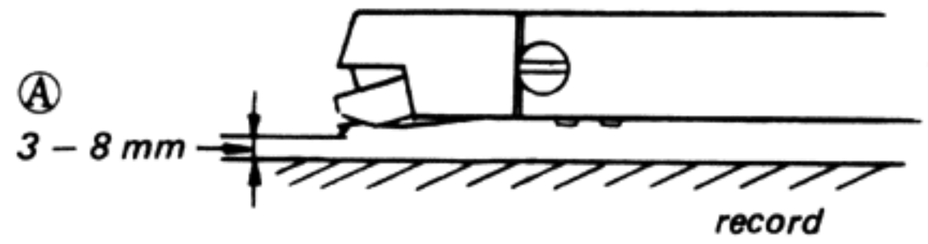

GENERAL NOTE:
Do not let a strong light get in the groove of photo interruptor during mechanical adjustment. Otherwise, misoperation of stoppage or moving may occur to the tonearm base.

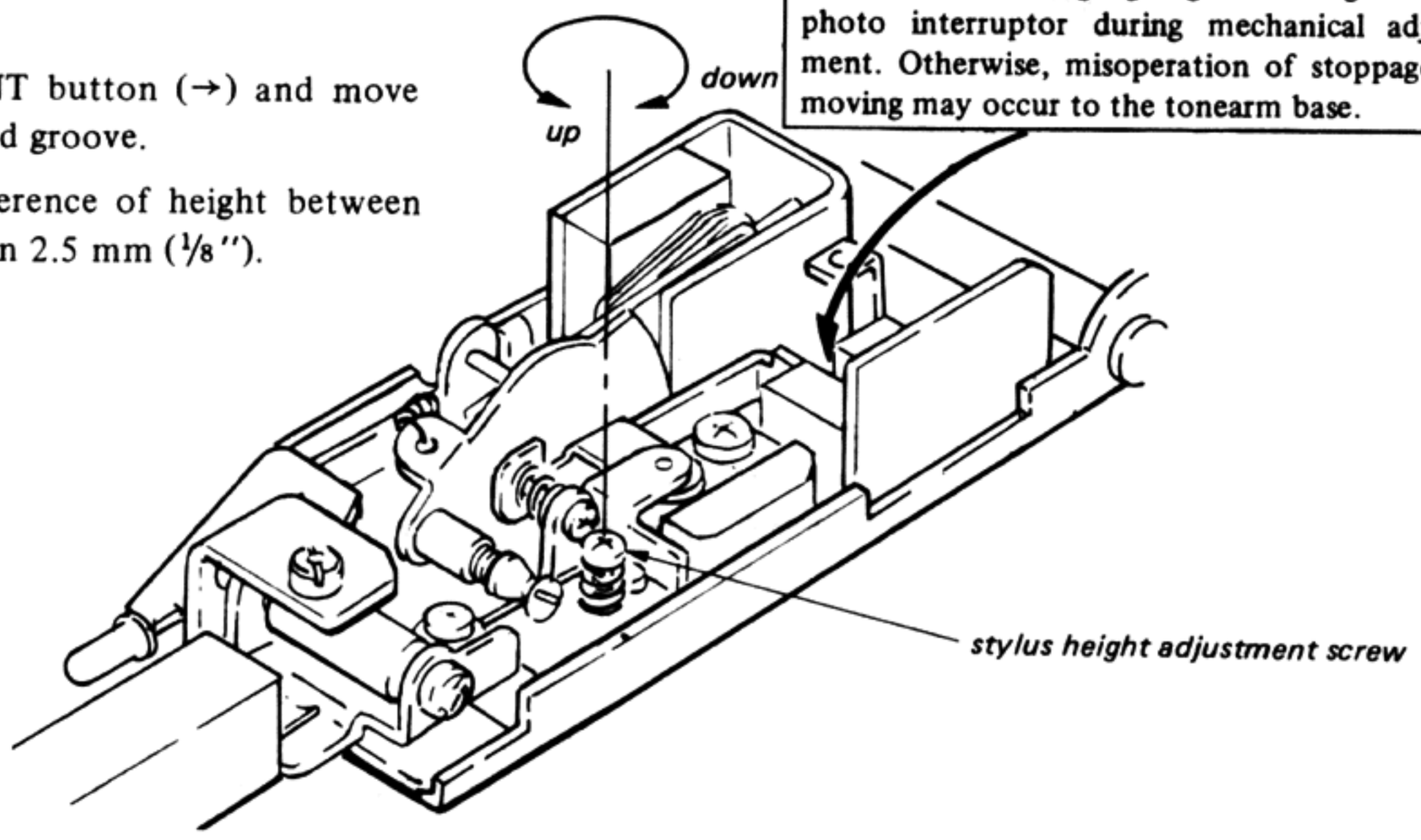

Lifter Height Adjustment

1. Adjust the lifter height adjustment screw so that the arm up/down coil position is 0 – 0.5 mm (0" – 1/32") as shown below.
2. Apply locking compound to the screw.

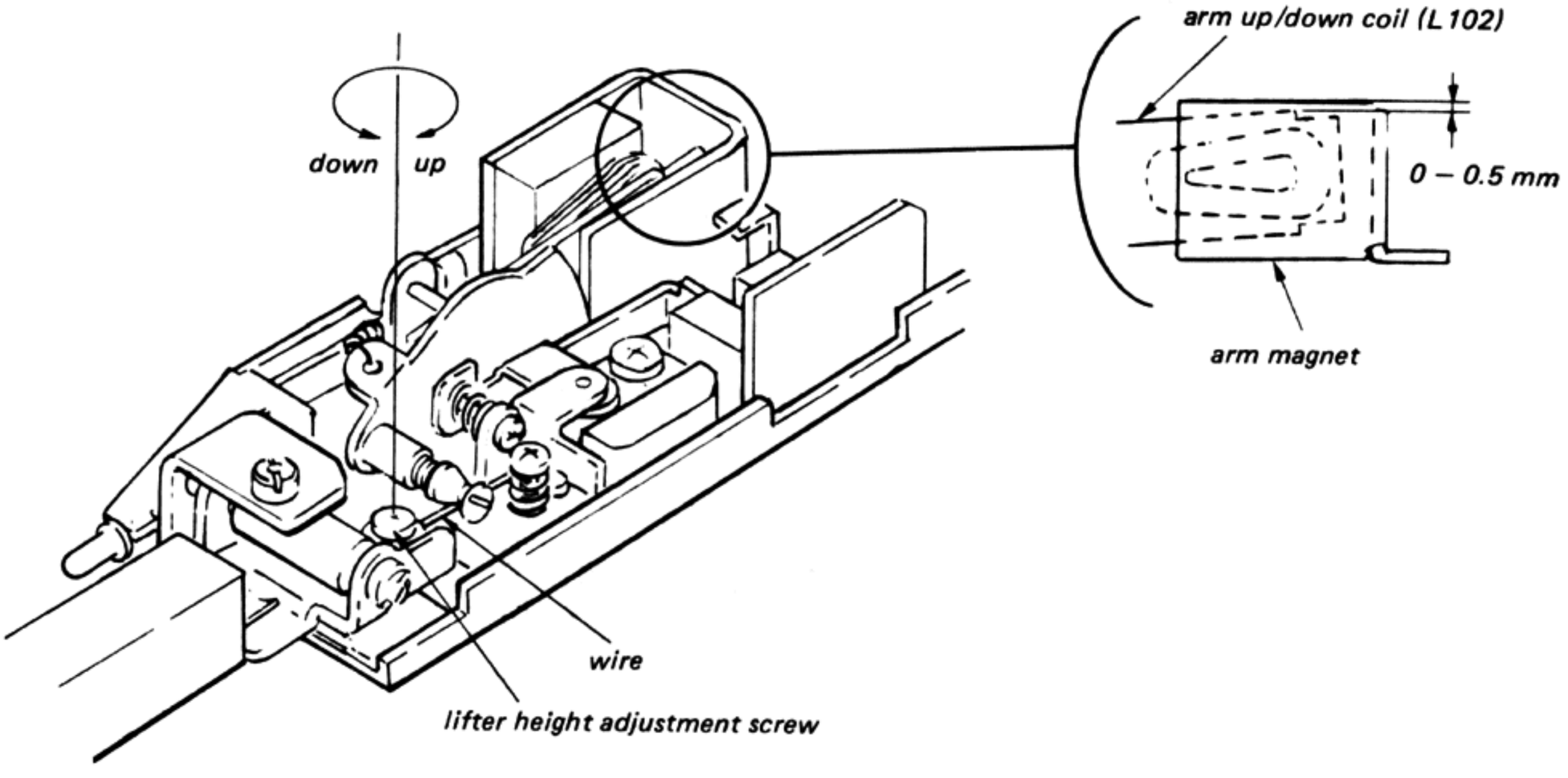

Drop Point (30 cm) Adjustment

1. Place a test record (YFSC-16) on the turntable and press the START/STOP button for lead-in.
2. Adjust the L position adjustment cam so that the drop point at this time is within the specification.

   Specification: 7 – 19 counts.

3. When the adjustemtn cannot be made by L position adjustment cam, adjust by using horizontal position adjustment screw.

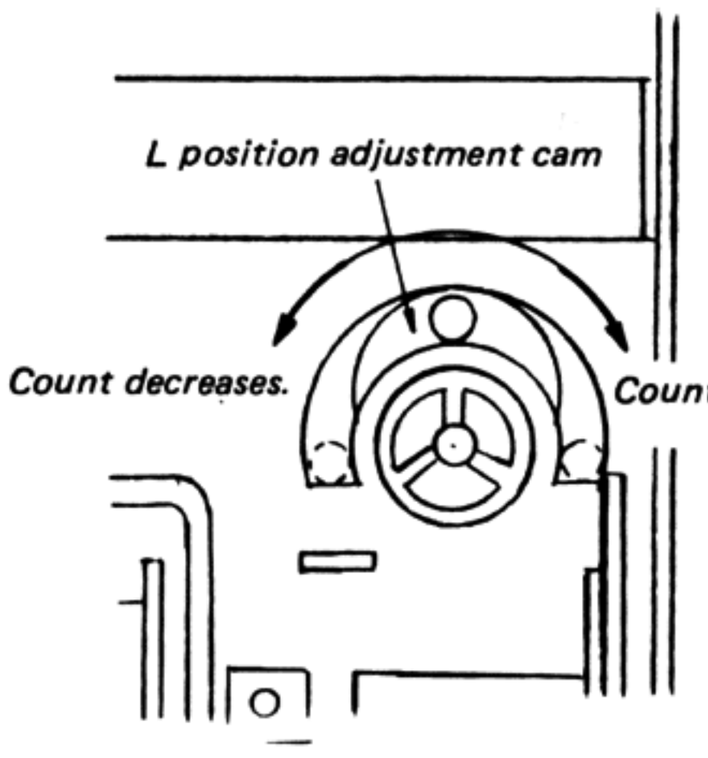

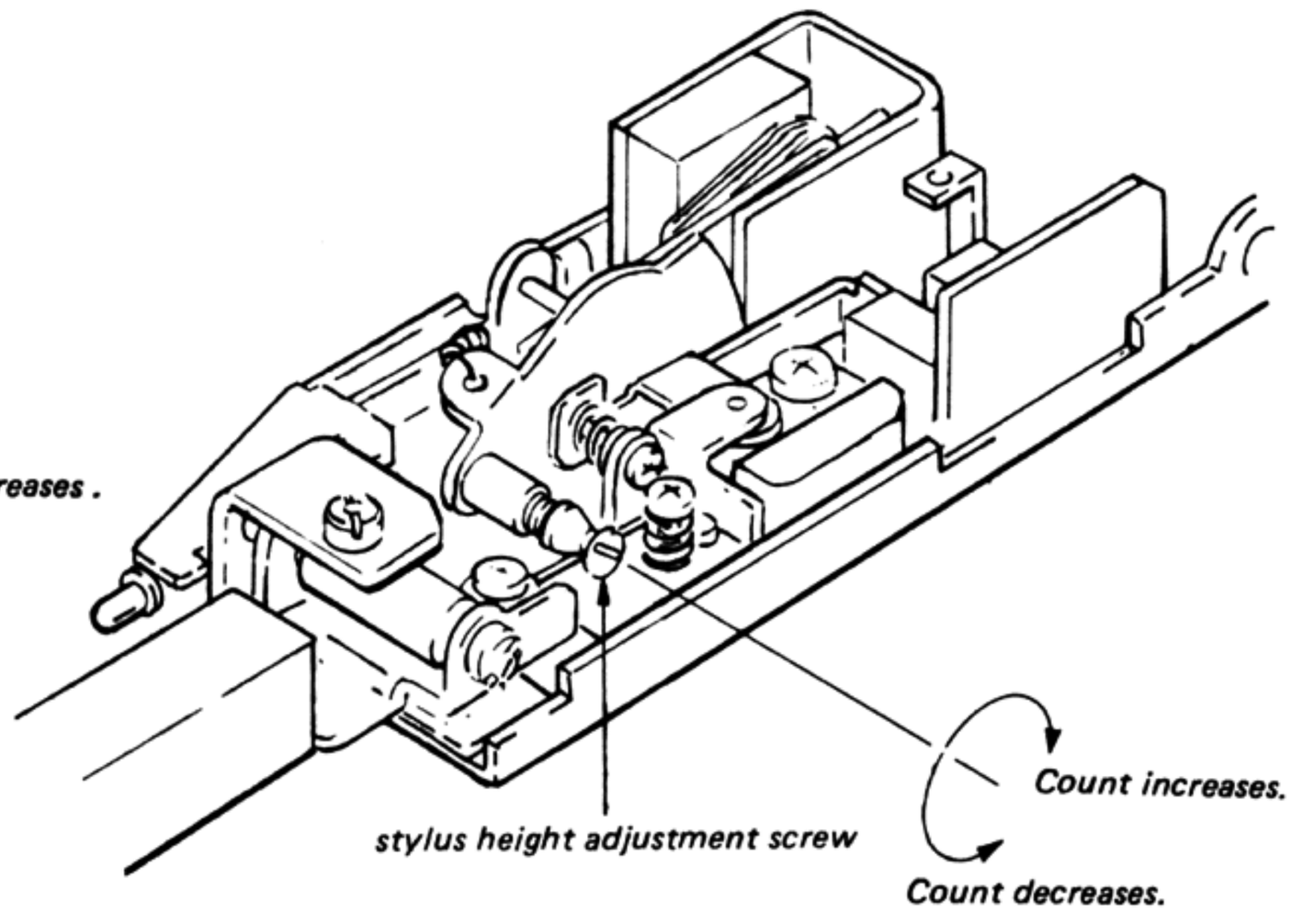

Tracking Error Adjustment

1. Place a test record (YFSC-16) on the turntable and press the START/STOP button for lead-in.
2. Turn the adjustment screw so that the tonearm base does not move just after the tonearm goes down.
3. After completing step (2), cause the tonearm to lead in, and then go UP after the tonearm base moves.
4. Check the count at this time, and then check that the difference in count when the tonearm goes down again is within 0 to 2 counts.

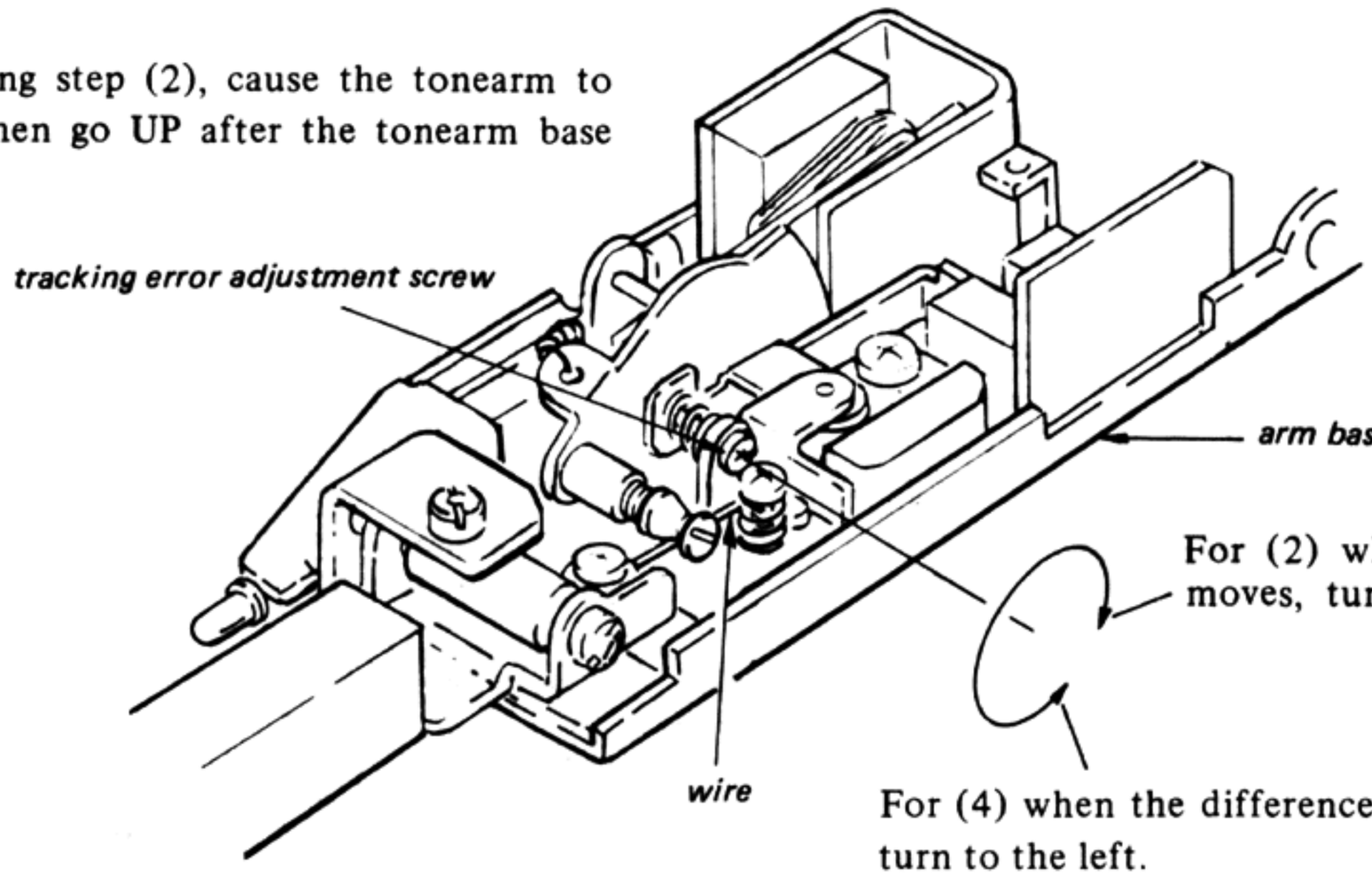

Blank Space Sensor Adjustment

This adjustment should be performed only when the followings have been done.

- When assembling blank space sensor section:
- When replacing photo coupler (Q404) of blank space sensor:

1. Blank Space Sensor Inclination Adjustment
   (1) Place the lacquer record (no groove record) on the turntable.
   (2) Move the turntable module so that the turntable position is as shown in the figure below.

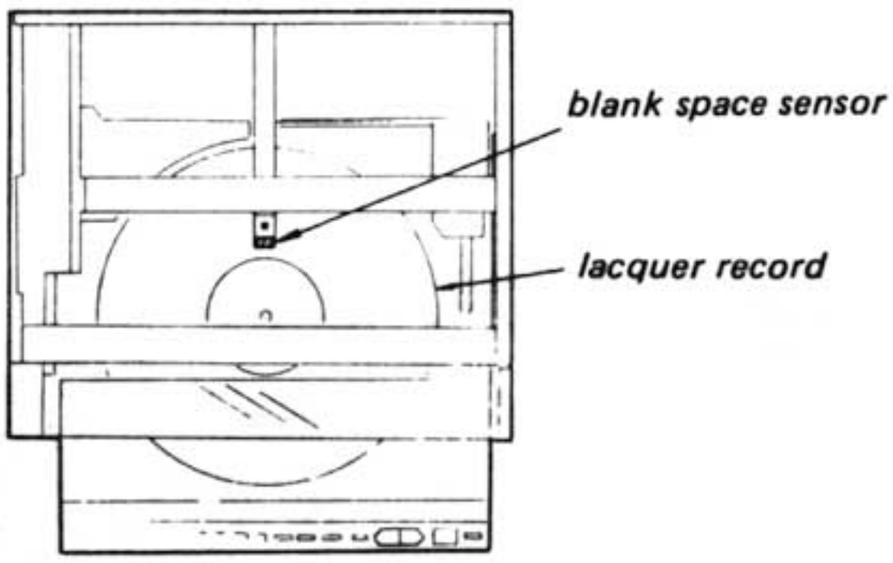

   (3) Adjust the adjustment screw so that the VOM reading is maximum in minus range.

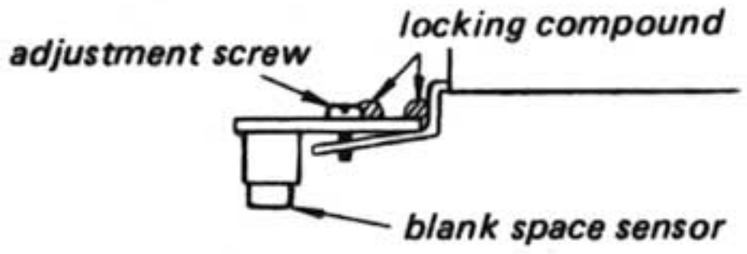

   (4) Turn the adjustment screw a half turn clockwise.
   (5) Apply locking compound.

– Simple Adjustment –

1) Adjust the adjustment screw so that the blank space sensor is horizontal.

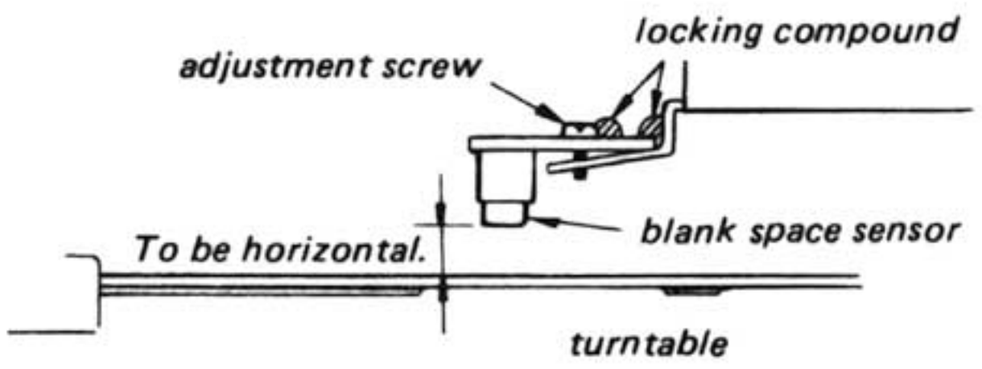

2) Apply locking compound.

2. Blank Space Sensor Voltage Adjustment
   (1) Place the lacquer record (no groove record) on the turntable.
   (2) Move the turntable module so that the turntable position is as shown in the step 1-(2).
   (3) Adjust the RV101 or RV102 so that VOM reading is –1 to –0.95 V dc.

– Simple Adjustment –

1) Place the test record (YFSC-16) on the turntable.
2) Press the OPEN/CLOSE button and close the turntable module.
3) Adjust the RV101 or RV102 so that the indication on the display at this time within the specification.

Note: This adjustment should be performed for both A side and B side of the test record (YFSC-16).

Specifications:

side A: 6 – 7
side B: 13 – 14

Adjustment Location and VOM Connecting Point:

– system control board –

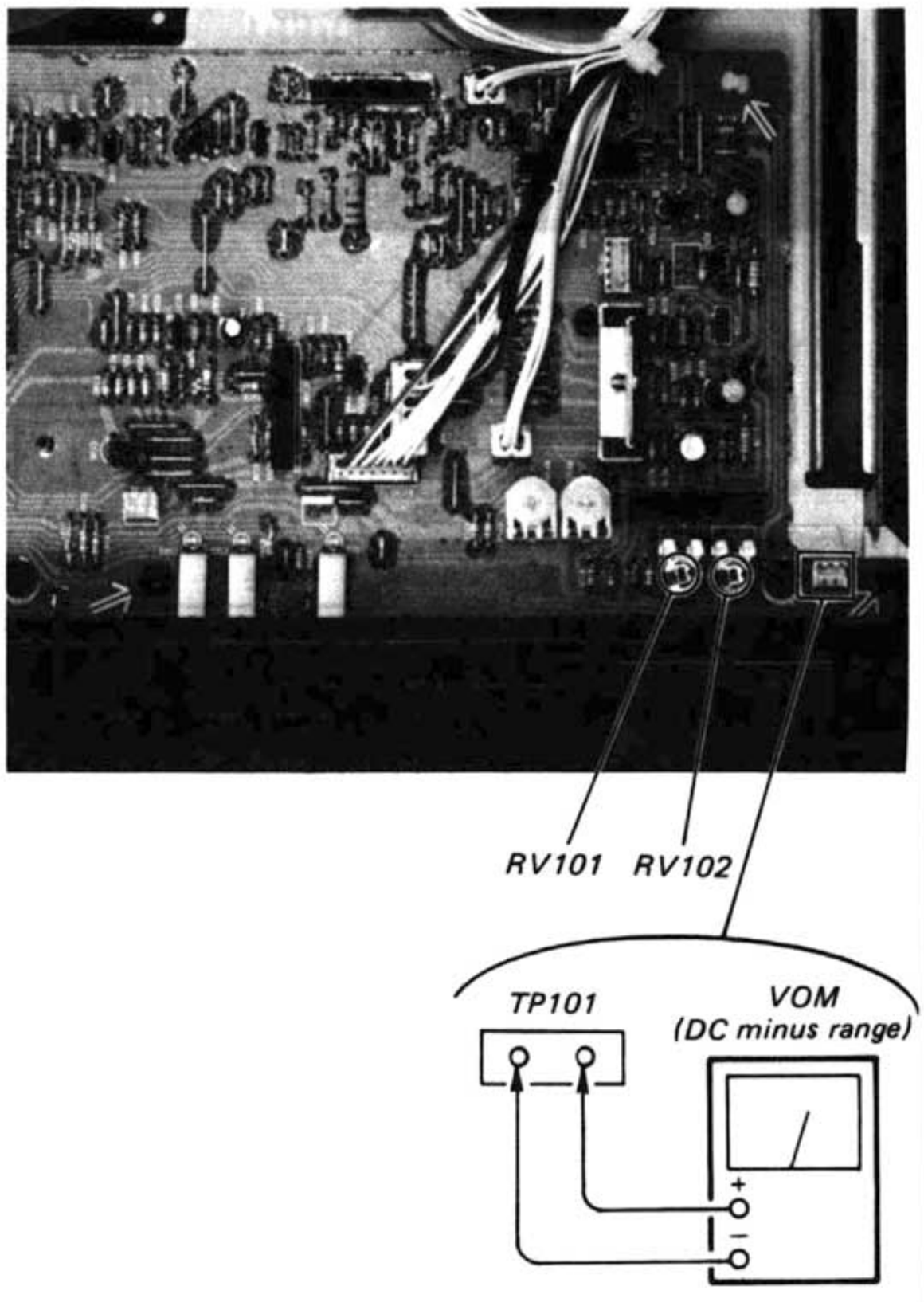

Arm Interrupter Adjustment

This adjustment should be performed only when replacing photo interrupter (Q401).

1. Press the arm transport button (◁) and move the arm over the turntable.
2. Press the arm lifter button and down the arm.
3. Set the arm fully rightward.
   (Be sure that the interrupter for tracking error detection is fully opened.)
4. Read the voltage on the VOM.
   If the reading is more than 0.6 V, short the TP106.

Adjustment Location:

–system control board –

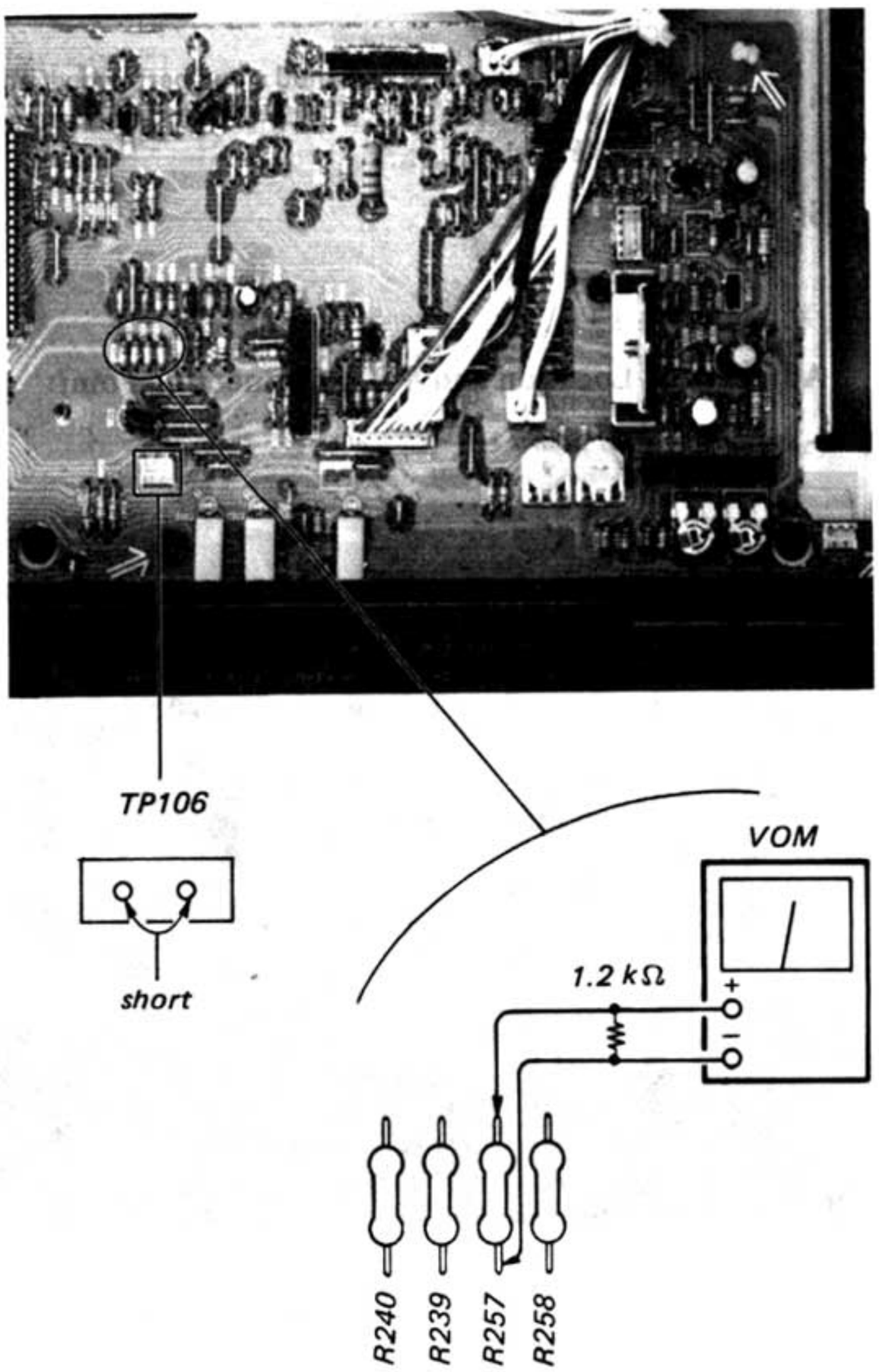

Blank Space Drop Point Adjustment

1. Set the RV301 (drop point adjustment resistor for user) to mechanical center.
2. Set the SENSITIVITY switch to "M".
3. Place the any one record on the turntable.
4. Press the OPEN/CLOSE button and close the turntable module.
5. Press the RMS button and play the second selection and last selection.
   At this time, confirm that the stylus tip drops on the blank space.
   If it is not, adjust RV104 and repeat steps 4 and 6.

Adjustment Location:

– system control board –

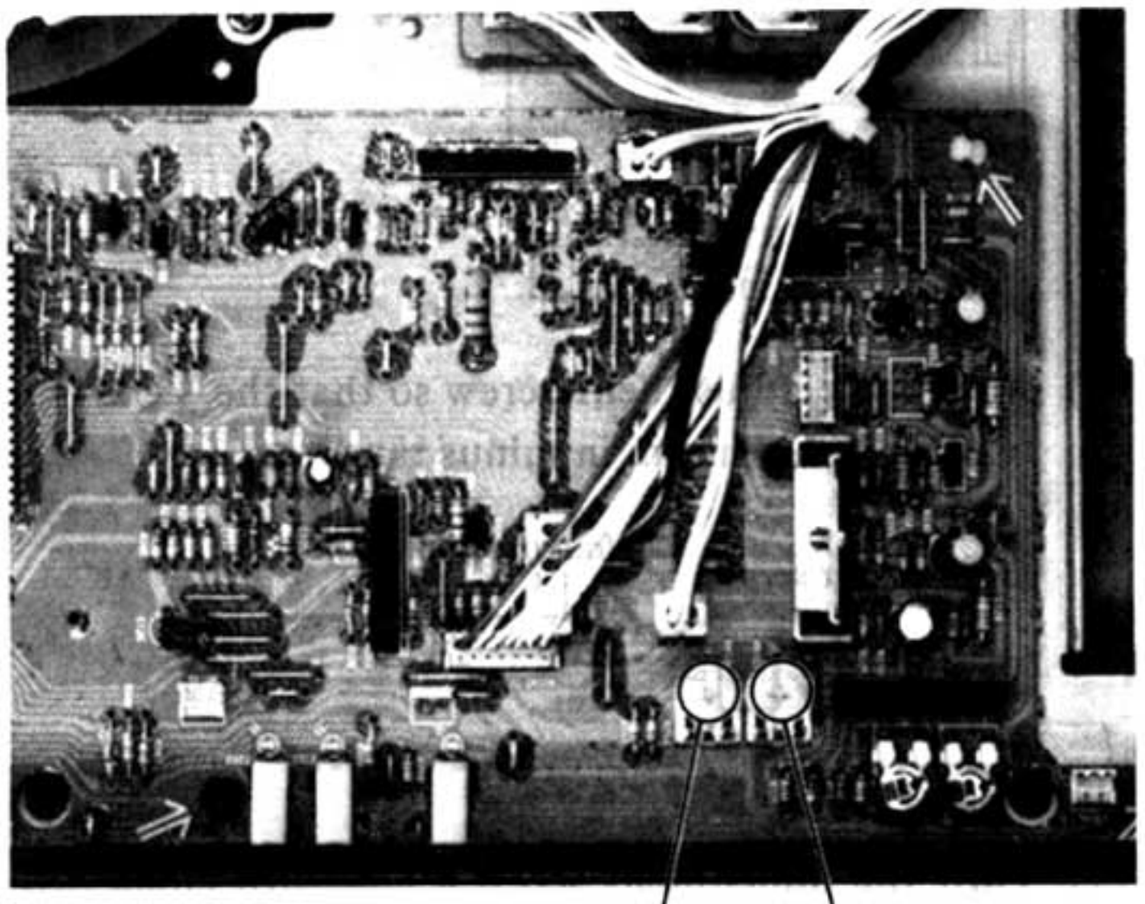

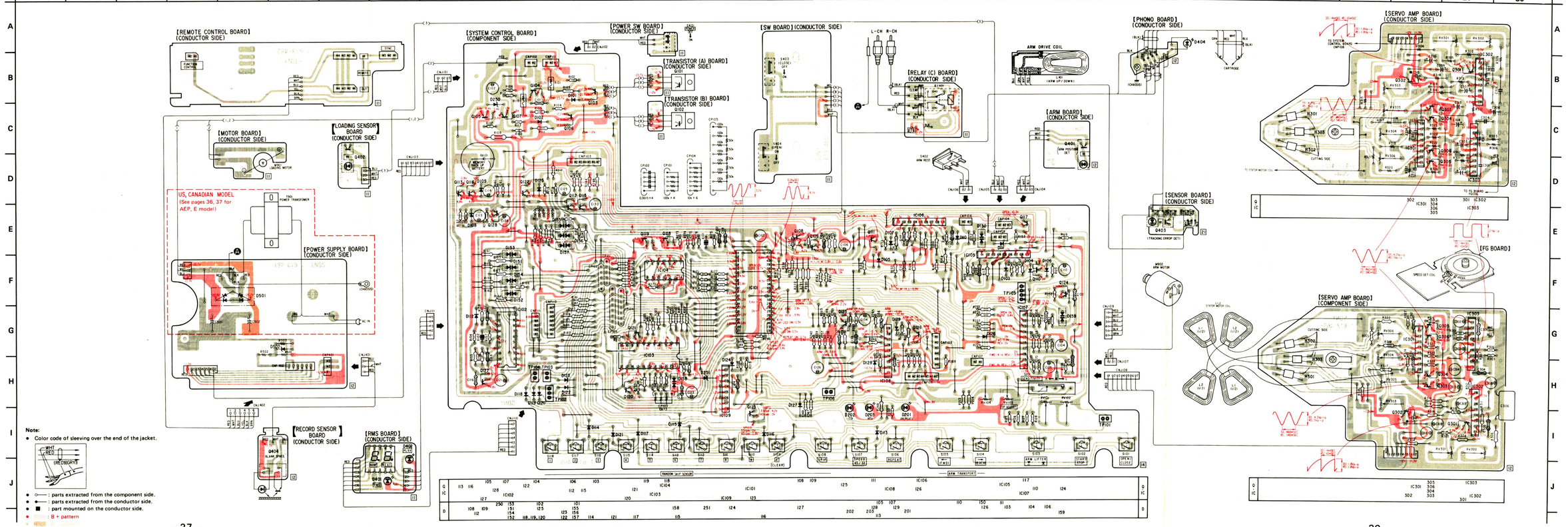
[REMOTE CONTROL BOARD] (CONDUCTOR SIDE)
[SYSTEM CONTROL BOARD] (COMPONENT SIDE)
[POWER SW BOARD] (CONDUCTOR SIDE)
[TRANSISTOR (A) BOARD] (CONDUCTOR SIDE)
[TRANSISTOR (B) BOARD] (CONDUCTOR SIDE)
[SW BOARD] (CONDUCTOR SIDE)
[RELAY (C) BOARD] (CONDUCTOR SIDE)
[PHONO BOARD] (CONDUCTOR SIDE)
[SERVO AMP BOARD] (CONDUCTOR SIDE)
[MOTOR BOARD] (CONDUCTOR SIDE)
[LOADING SENSOR BOARD] (CONDUCTOR SIDE)
[ARM BOARD] (CONDUCTOR SIDE)
[SENSOR BOARD] (CONDUCTOR SIDE)
[POWER SUPPLY BOARD] (CONDUCTOR SIDE)
[RECORD SENSOR BOARD] (CONDUCTOR SIDE)
[RMS BOARD] (CONDUCTOR SIDE)
[FG BOARD]
[SERVO AMP BOARD] (COMPONENT SIDE)
US, CANADIAN MODEL
(See pages 36, 37 for AEP, E model)
Note:
Color code of sleeving over the end of the jacket.
: parts extracted from the component side.
: parts extracted from the conductor side.
: part mounted on the conductor side.
: B + pattern

Gain/Offset Adjustment

1. Connect the pattern Ⓑ to Ⓒ, and apply regulated power supply (1.5 V DC) to point Ⓐ.
2. Connect an oscilloscope to the emitter of Q303, Q304 (H1), Q305, Q306 (H2), and adjust the regulated power supply voltage for 1.5 V DC.
3. Adjust RV303 (H1) and RV304 (H2) so that the terminal voltage of Q303, Q304 (H1) and Q305, Q306 (H2) are 4.5 Vp-p . . . . . **Gain Adjustment**
4. Adjust RV305 (H1) and RV306 (H2) so that the terminal waveforms of Q303, Q304 (H1) and Q305, Q306 (H2) are as shown below (or so that DC potential is 0 V) . . . . . **Offset Adjustment**
5. After Adjustment, remove the lead wire connecting pattern Ⓑ to Ⓒ.

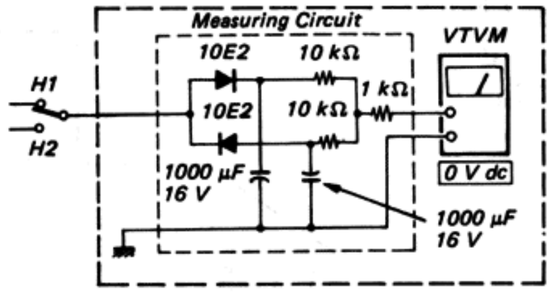

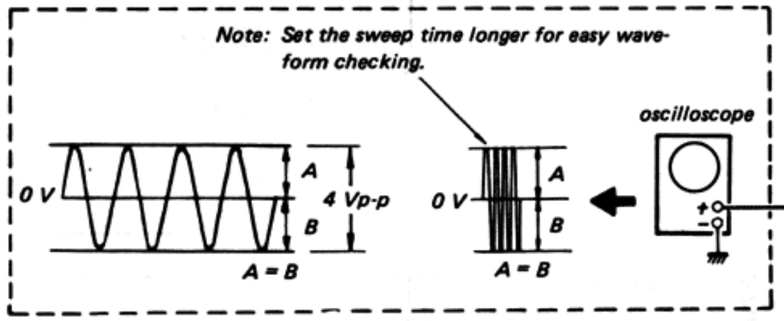

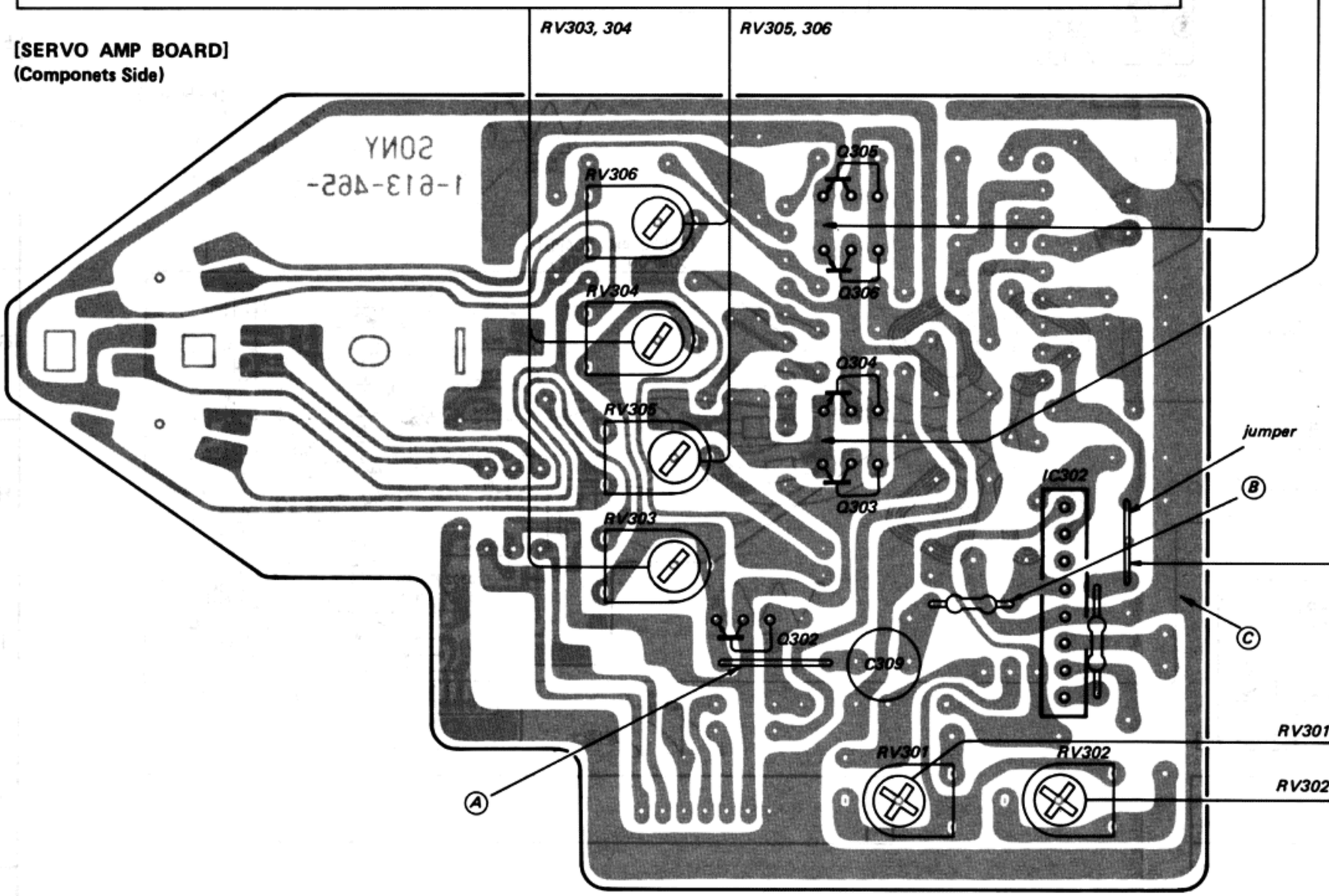

Speed Adjustment

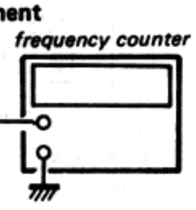

1. Set power switch to "ON".
2. Set turntable speed to "45 rpm".
3. Adjust RV301 for 95.72 – 96.26 Hz reading on the counter.
4. Set turntable speed to "33 rpm".
5. Adjust RV302 for 70.90 –71.32 Hz reading on the counter.

4-1. MOUNTING DIAGRAM – SYSTEM CONTROL BOARD –

– Conductor Side –

Note:

- Color code of sleeving over the end of the jacket.
- ○—— : parts extracted from the component side.
- ●—— : parts extracted from the conductor side.
- ■ : part mounted on the conductor side.
- ░ : B + pattern
- ▇ : B – pattern

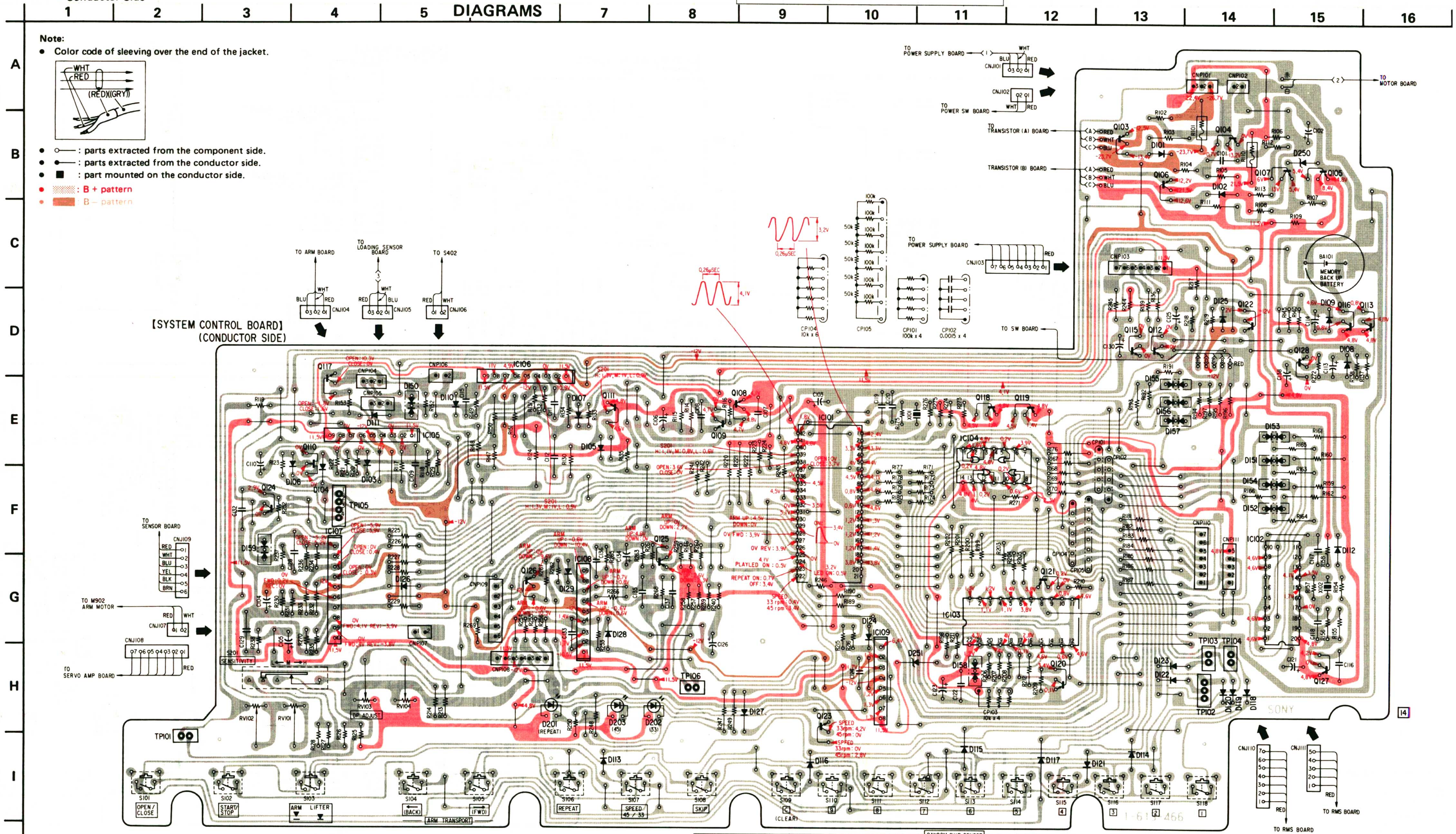

	1	2	3	4	5	6	7	8	9	10	11	12	13	14	15	16	
Q·IC			124	110, 117, IC107, IC105		IC106, 126	IC108, 111	125, 109, 108	123	IC101, IC109	118, IC104	119, IC103, 121, 120	103, 115, 112, 106	104, 122	107, 128, IC102, 105, 127, 116	113	Q·IC
D			159	106, 104, 111, 103	150, 126, 110	201	129, 107, 105, 128, 113, 203	202	127, 116	124, 251	158, 115	117, 121	114, 101, 155, 156, 157, 123, 122	102, 125, 120, 119, 118, 153, 151, 154, 152	250, 109, 108, 112		D

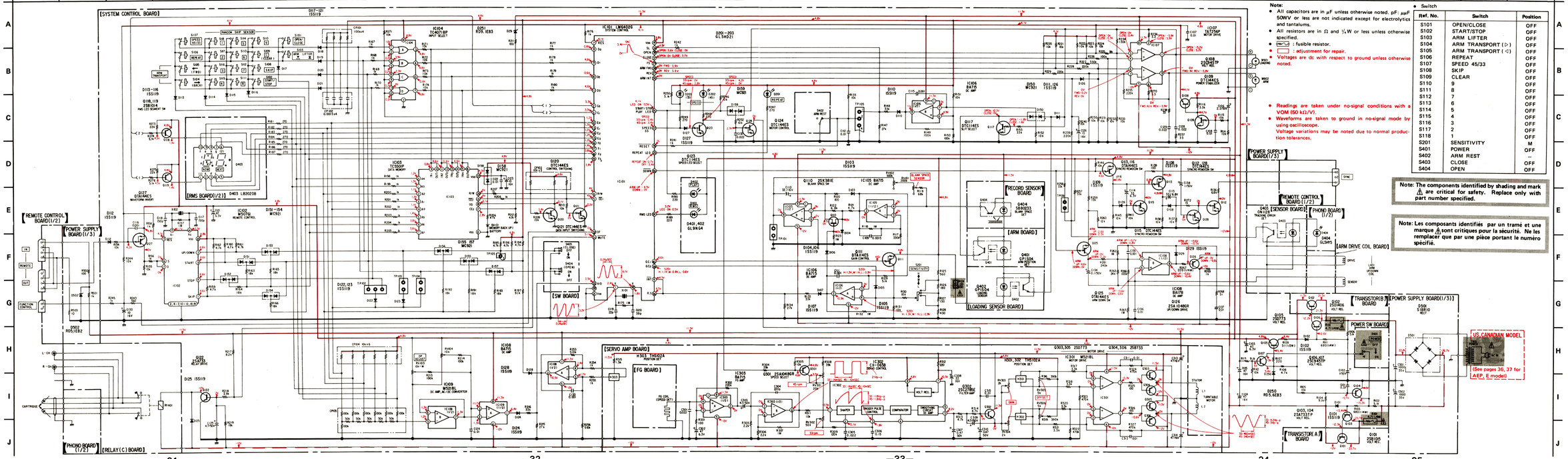

Note:

- All capacitors are in μF unless otherwise noted. pF: μμF
  50WV or less are not indicated except for electrolytics and tantalums.
- All resistors are in Ω and ¼W or less unless otherwise specified.
- : fusible resistor.
- : adjustment for repair.
- Voltages are dc with respect to ground unless otherwise noted.

- Readings are taken under no-signal conditions with a VOM (50 kΩ/V).
- Waveforms are taken to ground in no-signal mode by using oscilloscope.
  Voltage variations may be noted due to normal production tolerances.

- Switch

Ref. No.	Switch	Position
S101	OPEN/CLOSE	OFF
S102	START/STOP	OFF
S103	ARM LIFTER	OFF
S104	ARM TRANSPORT (▷)	OFF
S105	ARM TRANSPORT (◁)	OFF
S106	REPEAT	OFF
S107	SPEED 45/33	OFF
S108	SKIP	OFF
S109	CLEAR	OFF
S110	9	OFF
S111	8	OFF
S112	7	OFF
S113	6	OFF
S114	5	OFF
S115	4	OFF
S116	3	OFF
S117	2	OFF
S118	1	OFF
S201	SENSITIVITY	M
S401	POWER	OFF
S402	ARM REST	—
S403	CLOSE	OFF
S404	OPEN	OFF

Note: The components identified by shading and mark ⚠ are critical for safety. Replace only with part number specified.

Note: Les composants identifiés par un tramé et une marque ⚠ sont critiques pour la sécurité. Ne les remplacer que par une pièce portant le numéro spécifié.

4-4. MOUNTING AND SCHEMATIC DIAGRAMS
– Power Supply Section –
(AEP, E Model)

E Model

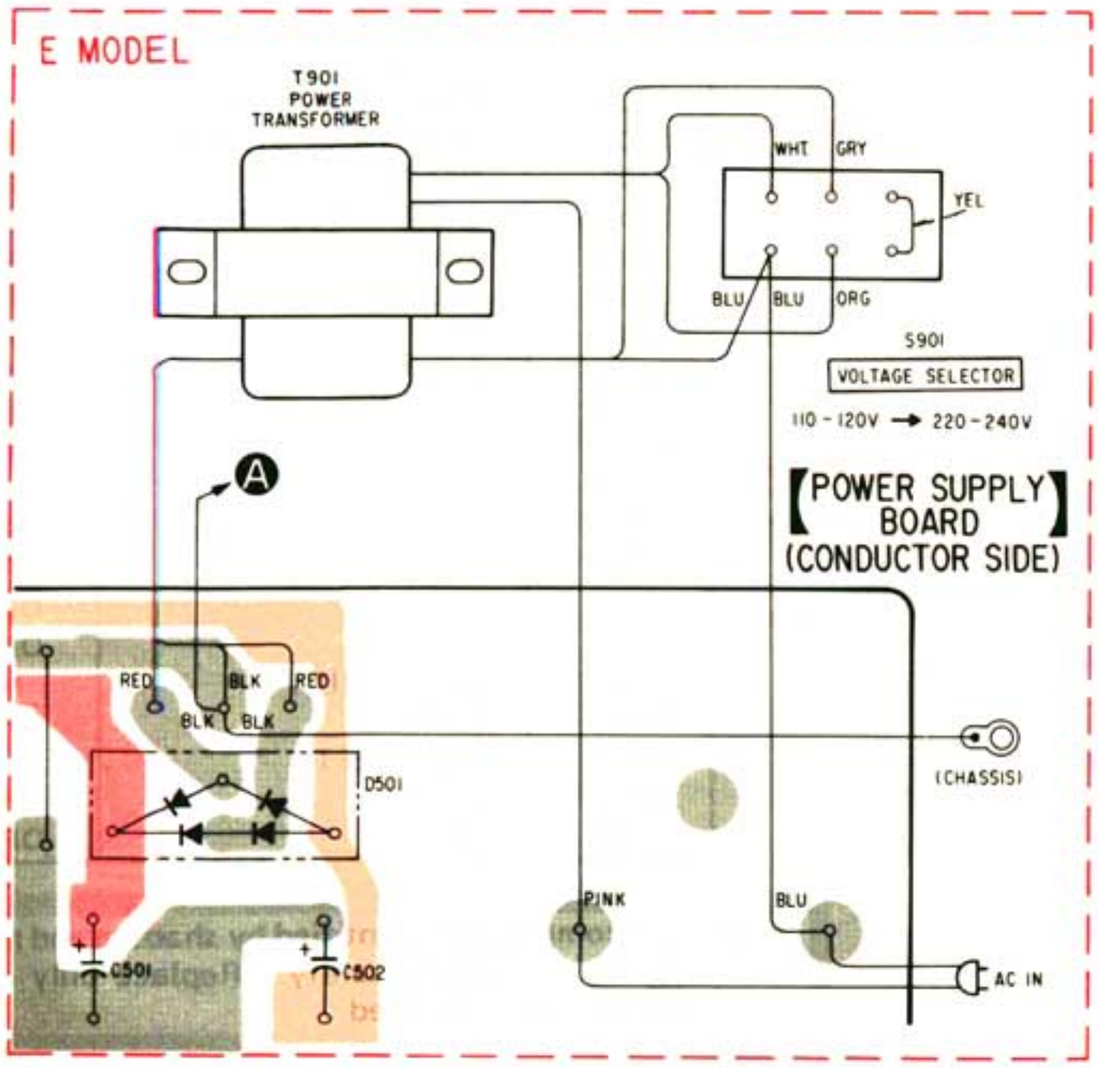

E Model

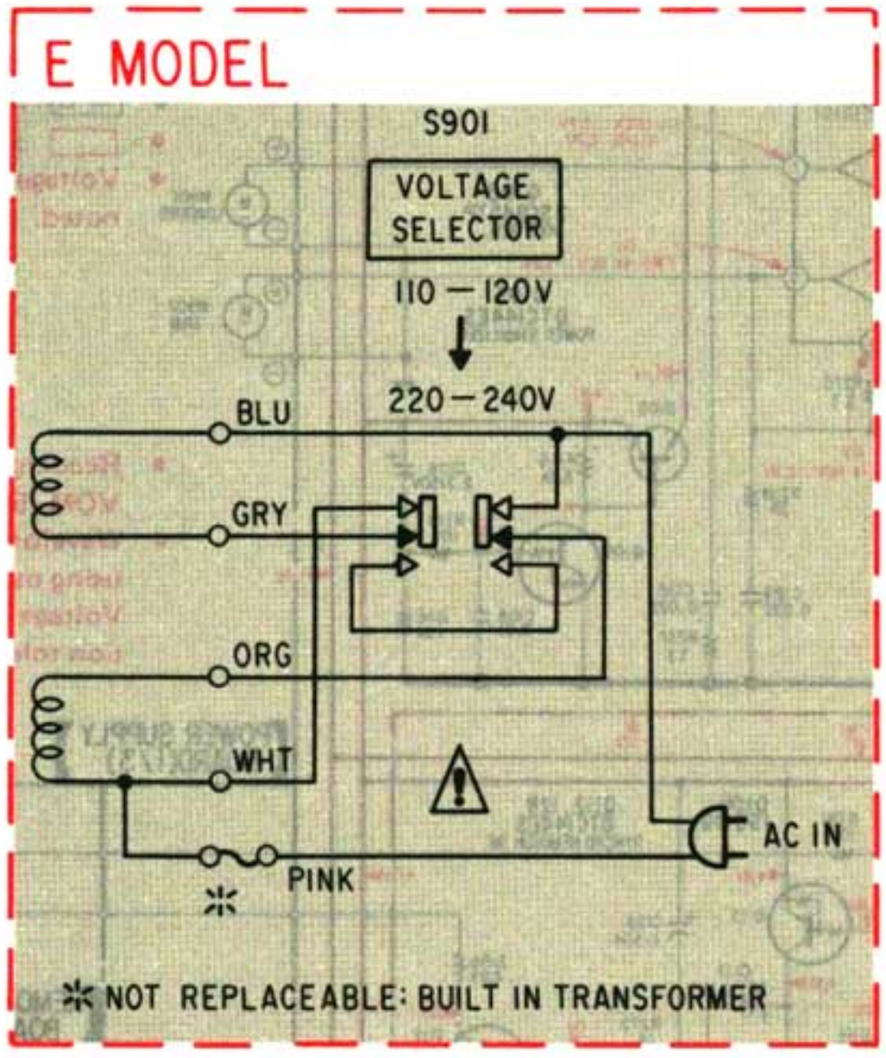

AEP Model

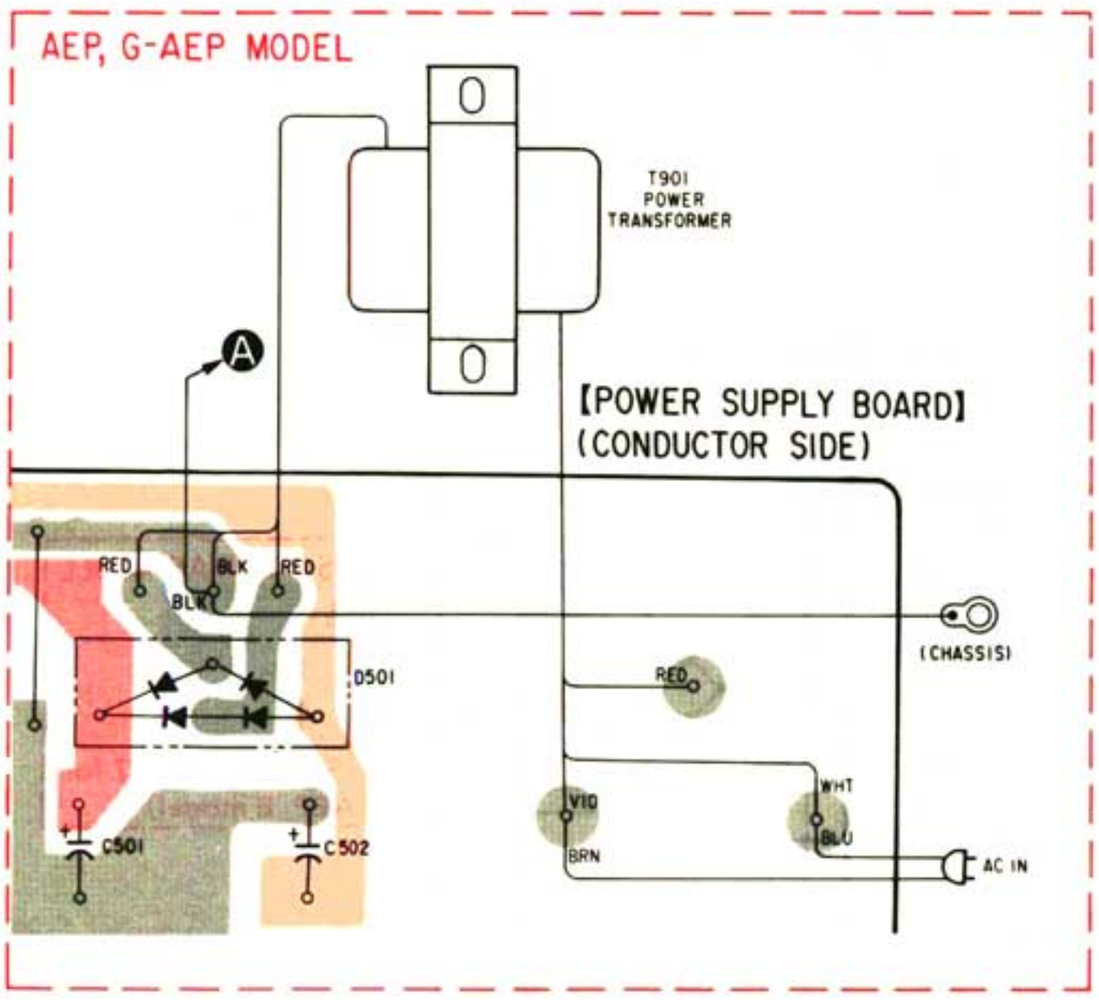

AEP Model

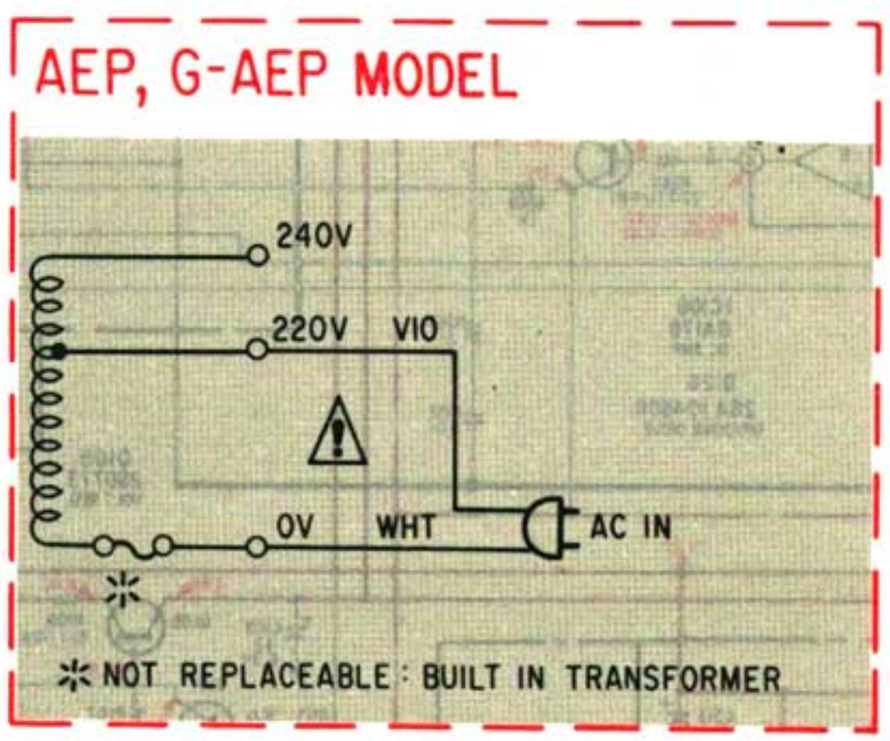

- **Semiconductor Lead Layouts**

2SA1048-GR
DTA114ES
DTA144ES
DTC114ES
DTC144ES

2SB733

2SB1014

2SB1015Y
2SD1406Y

2SC2785E

2SD773

2SK381E

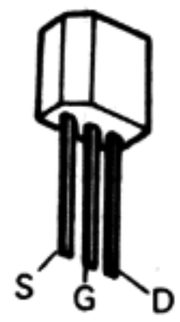

BA715

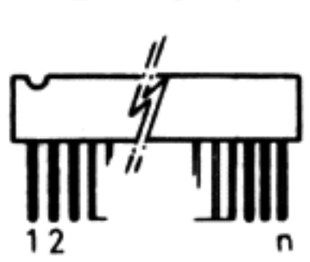

CX065B
M5218L

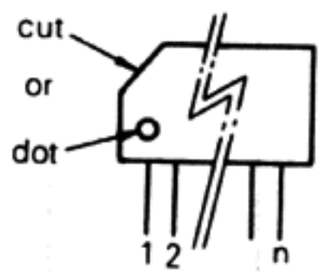

LM6402G-476
M50761-413P
TC4071BP
TC5501P

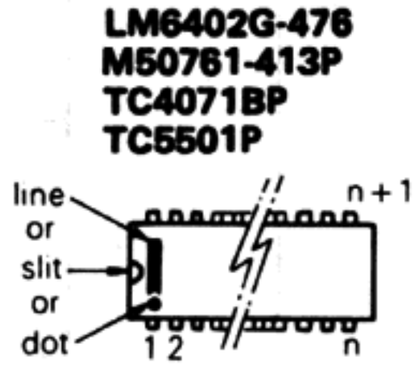

(Top view)

TA7256P

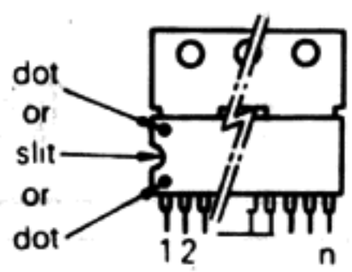

(Marking side view)

1SS119
RD5.1EB2
RD5.6EB3
RD9.1EB3

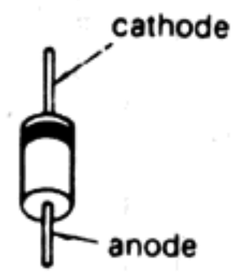

GL5HD21
GL5HY5

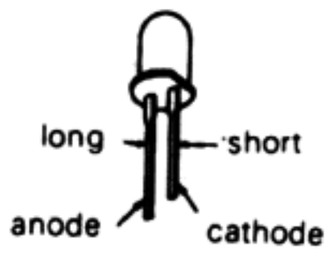

GL9NG4A

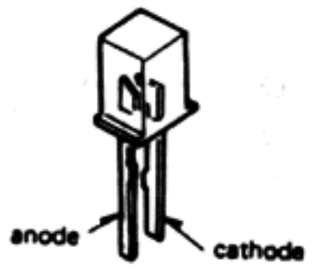

GP1S04

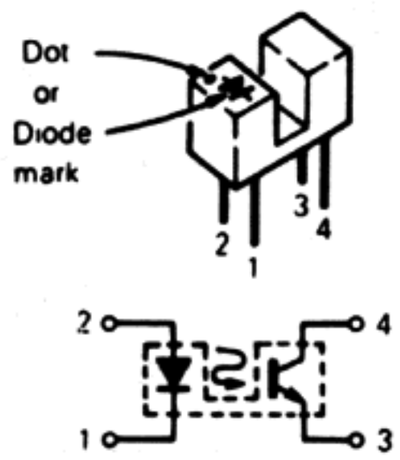

LB202DB

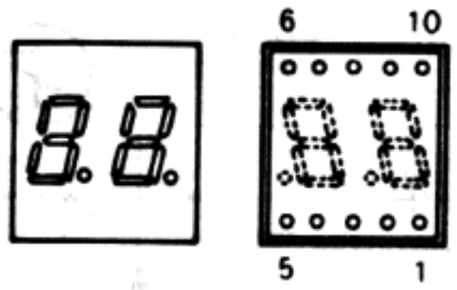

MC921

ON1128

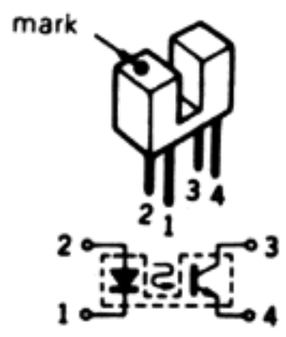

S1RBA10

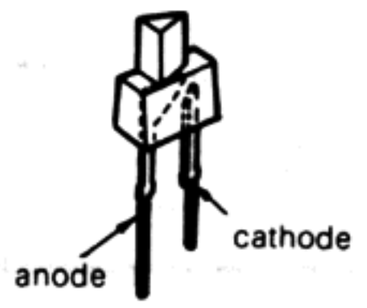

THS102A

(Top view) (Bottom view)

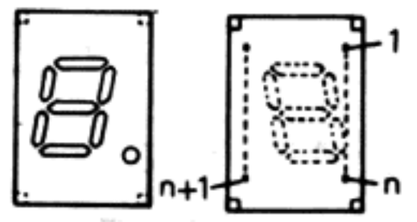

SECTION 5
EXPLODED VIEWS AND PARTS LIST

NOTE:
- The mechanical parts with no reference number in the exploded views are not supplied.
- Items marked " ★ " are not stocked since they are seldom required for routine service. Some delay should be anticipated when ordering these items.
- The construction parts of an assembled part are indicated with a collation number on the remark column.

The components identified by shading and mark ⚠ are critical for safety. Replace only with part number specified.

Les composants identifiés par une trame et une marque ⚠ sont critiques pour la sécurité. Ne les remplacer que par une pièce portant le numéro spécifié.

(1)

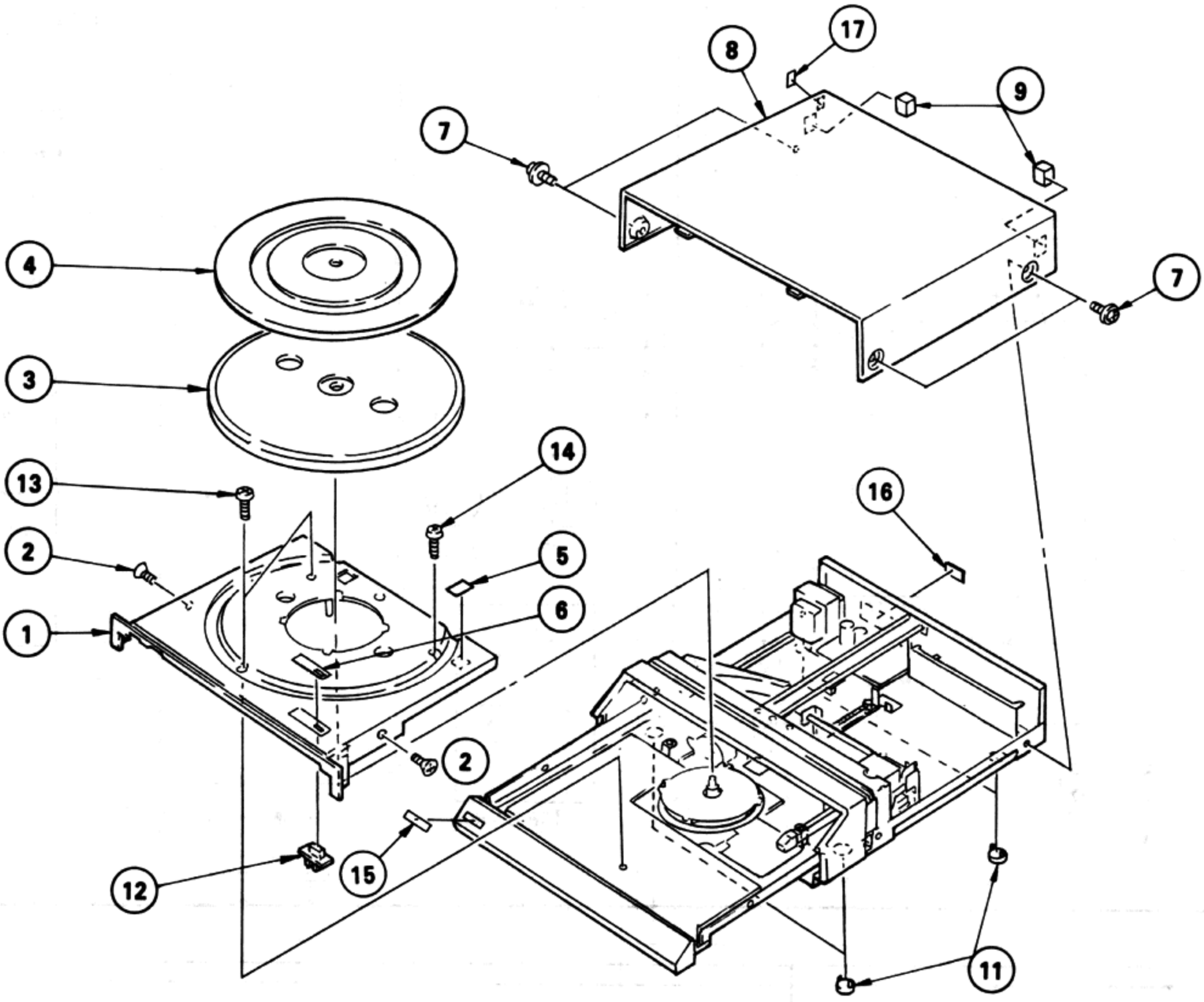

No.	Part No.	Description	REMARKS
1	4-907-969-01	COVER (A), FRAME	
2	3-703-583-11	SCREW (3X6), TIGHT	
3	4-907-962-01	TURNTABLE	
4	4-888-929-21	SHEET, TURNTABLE	
5	*4-885-792-00	PLUG IN SEAL (A)	
6	*4-906-113-01	LABEL, SENSITIVENESS SELECTION	
7	4-886-821-01	SCREW, M3 TOP PLATE	
8	4-907-970-01	PLATE, TOP	
9	3-538-026-00	CUSHION	
11	*4-907-980-01	FOOT	
12	4-907-929-01	KNOB, SELECTION, SENSITIVENESS	
13	7-682-547-09	SCREW +B 3X6	
14	7-685-751-09	SCREW +BVTT 3X6 (S)	
15	3-701-690-01	(UK)...LABEL (MADE IN JAPAN)	
16	*4-302-759-00	LABEL, SERIAL NUMBER	
17	*3-703-680-00	(US)...LABEL, CAUTION, SUB, NEW UL	

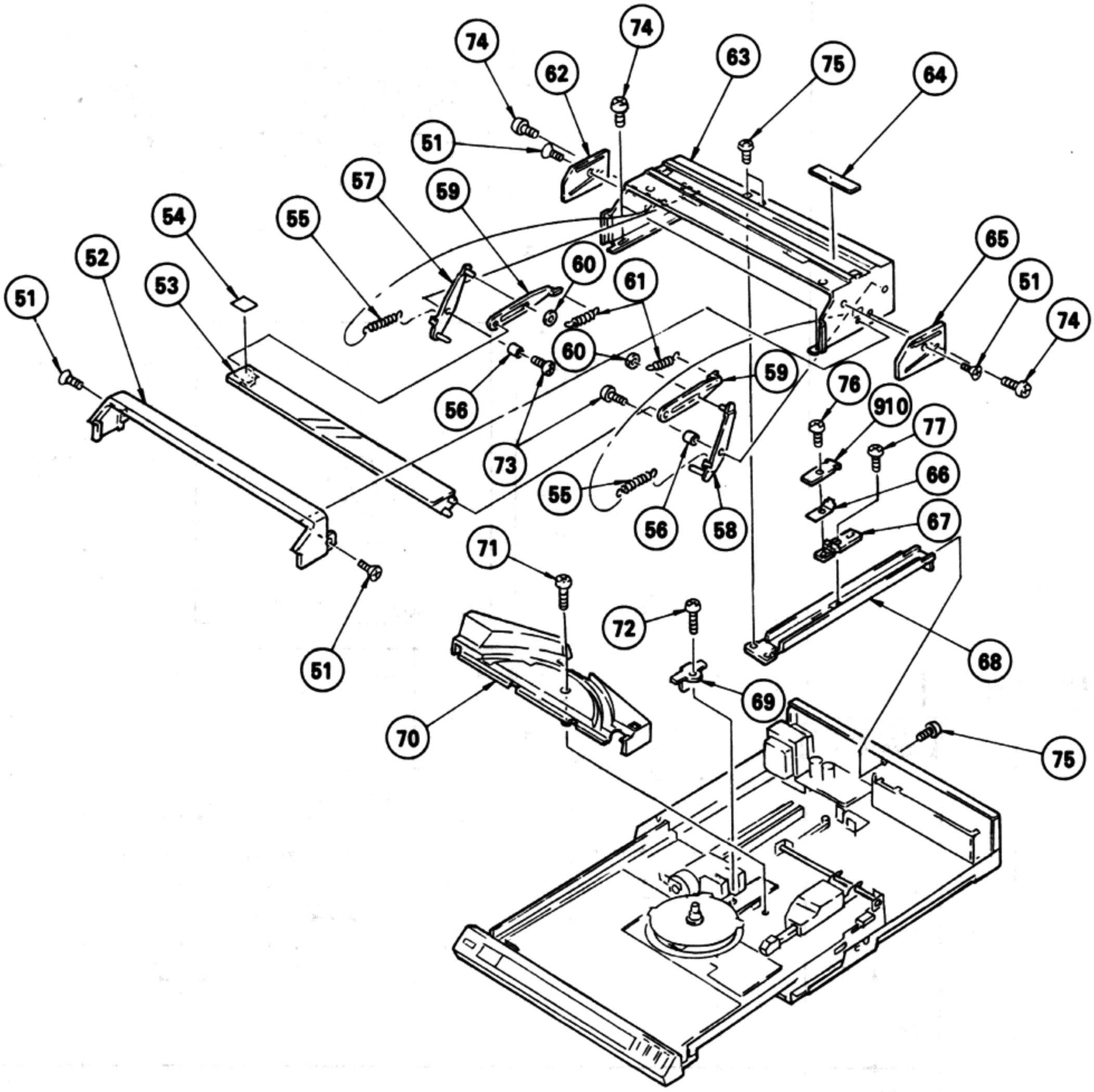

No.	Part No.	Description	REMARKS
51	3-703-583-11	SCREW (3X6), TIGHT	
52	4-907-950-01	COVER, FRONT	
53	4-907-949-01	PANEL, FRONT	
54	3-703-708-01	STICKER, SONY SYMBOL (18)	
55	4-907-982-01	SPRING, TENSION	
56	4-907-936-01	SLEEVE, SWITCHING	
57	X-4907-902-1	LEVER (LEFT) ASSY, SWITCHING	
58	X-4907-901-1	LEVER (RIGHT) ASSY, SWITCHING	
59	4-907-947-01	LEVER, INTERMEDIATION	
60	3-558-708-21	WASHER, STOPPER	
61	4-907-983-01	SPRING, TENSION	
62	4-907-948-01	CAM (LEFT), SWITCHING	
63	*4-907-964-01	REINFORCEMENT (FRONT)	
64	4-907-976-11	LABEL, CAUTION, SERVICE	

No.	Part No.	Description	REMARKS
65	4-907-952-01	CAM (RIGHT), SWITCHING	
66	4-888-945-00	SPRING, LEAF	
67	*4-888-961-00	PLATE, ADJUSTMENT, SENSOR	
68	*4-907-955-01	REINFORCEMENT (UPPER)	
69	*4-907-913-01	GUIDE, RACK	
70	4-907-966-01	COVER (B), FRAME	
71	7-685-751-09	SCREW +BVTT 3X6 (S)	
72	3-703-107-01	SCREW, TIGHT, S	
73	7-685-870-09	SCREW +BVTT 3X5 (S)	
74	7-685-750-09	SCREW +PTT 3X5 (S)	
75	7-682-547-09	SCREW +B 3X6	
76	7-621-775-40	SCREW +B 2.6X8	
77	7-685-861-09	SCREW +BVTT 2.6X5 (S)	
910	*1-610-415-00	PC BOARD, RECORD SENSOR	

(3)

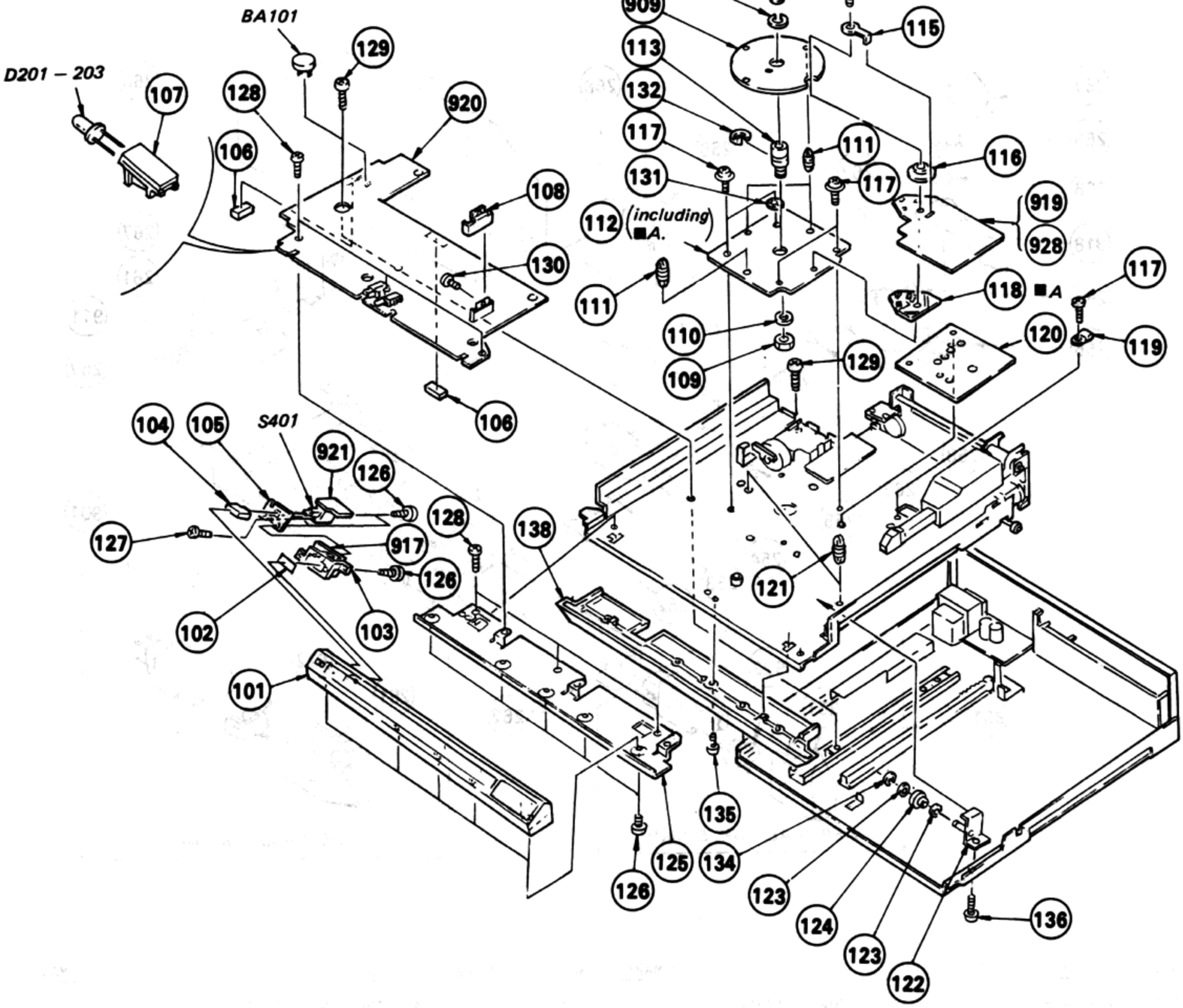

No.	Part No.	Description	REMARKS
101	X-4907-915-1	PANEL ASSY, CONTROL	
102	4-907-932-01	COVER, INDICATION	
103	*4-907-958-01	HOLDER (A), LED	
104	4-907-928-01	BUTTOM, POWER	
105	*4-907-926-01	BRACKET, SWITCH	
106	9-911-842-XX	CUSHION (S)	
107	4-907-927-01	HOLDER (B), LED	
108	*4-906-111-01	HEAT SINK (B)	
109	*4-903-330-01	NUT (TMD), BEARING	
110	4-885-728-00	PACKING	
111	4-881-636-11	SUPPORT (TMD), PC	
112	X-4887-413-1	STATOR ASSY	118
113	4-885-724-00	BEARING	
114	A-4608-232-A	ROTOR ASSY	
115	*4-881-629-00	PLATE (A), GROUND	
116	4-885-727-00	SPACER	
117	3-703-249-01	SCREW, S TIGHT, +PTTWH 3X6	
118	4-857-642-00	HOLDER, PC BOARD	
119	*3-001-707-01	HOLDER, WIRE	
120	*4-907-938-01	SHEET, PROTECTION	
121	*4-835-627-00	FASTENER, (A)	
122	X-4907-904-1	BRACKET (FRONT) ASSY, ROLLER	

No.	Part No.	Description	REMARKS
123	3-701-441-11	WASHER	
124	4-907-908-01	ROLLER	
125	*4-907-946-01	REINFORCEMENT, PANEL	
126	7-685-146-19	SCREW +BTP 3X8 TYPE2 N-S	
127	7-628-253-05	SCREW +PS 2X4	
128	7-685-870-09	SCREW +BVTT 3X5 (S)	
129	7-621-775-00	SCREW +B 2.6X3	
130	7-682-545-04	SCREW +P 3X4	
131	7-623-422-07	LW 3, TYPE B	
132	7-624-133-94	STOP RING 15, TYPE-CE	
133	7-682-149-13	SCREW +P 3X10	
134	7-624-106-04	STOP RING 3.0, TYPE -E	
135	7-682-545-04	SCREW +P 3X4	
136	7-685-870-09	SCREW +BVTT 3X5 (S)	
137	4-885-135-00	RETAINER, THRUST	
138	4-907-963-01	COVER, PANEL	
909	*1-608-883-00	PC BOARD, FG	
917	*1-613-463-11	PC BOARD, RMS	
919	*1-613-465-11	PC BOARD, SERVO AMP	
920	*1-613-466-11	PC BOARD, SYSTEM CONTROL	
921	*1-613-467-11	PC BOARD, POWER SW	
928	*A-4619-249-A	MOUNTED PCB, SERVO AMP	

(4)

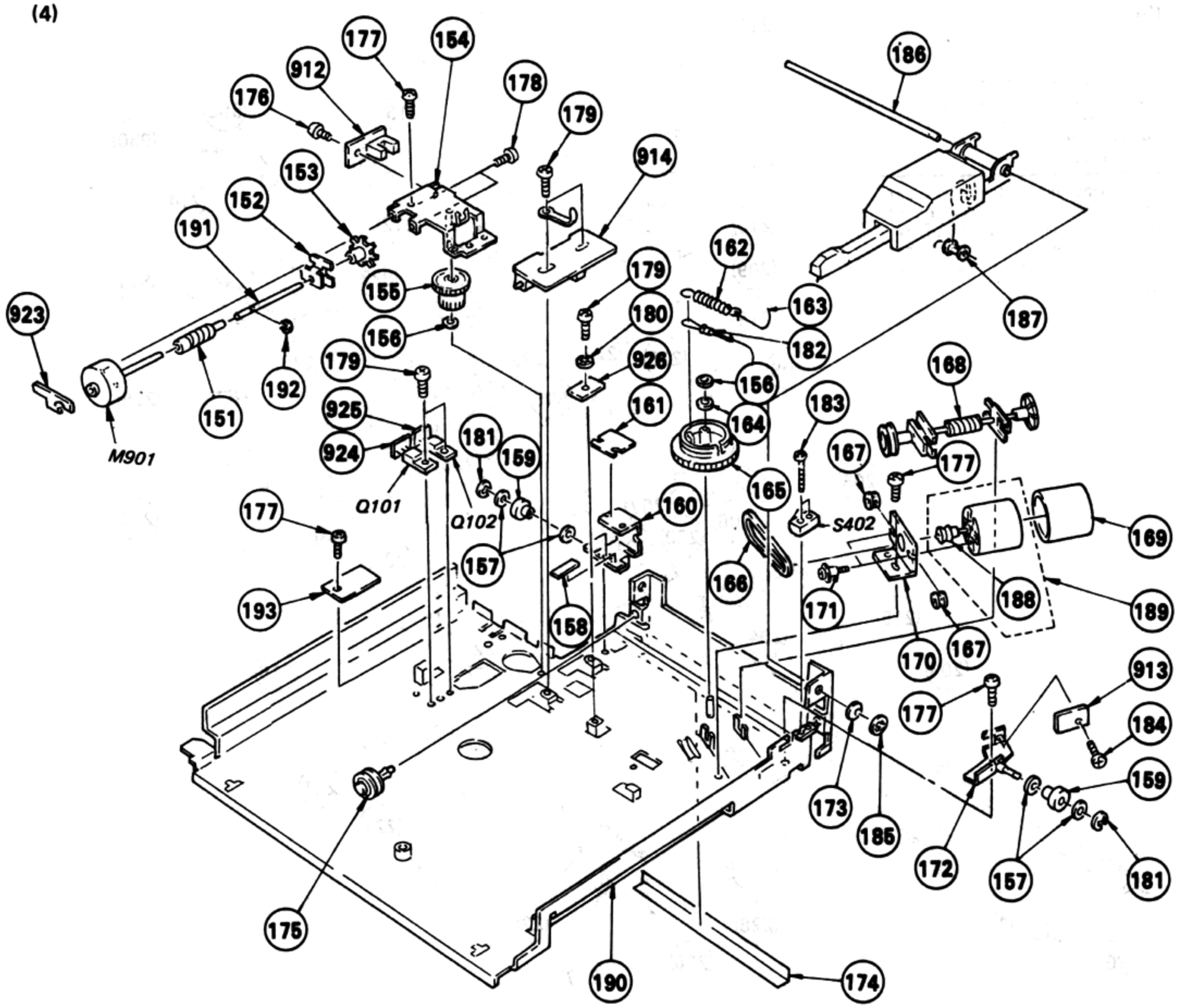

No.	Part No.	Description	REMARKS
151	4-888-904-00	WORM (A)	
153	4-906-105-01	DISK, SLIT	
154	*X-4907-907-1	BRACKET ASSY, LOADING GEAR	
155	4-907-916-01	WHEEL, WORM	
156	3-558-708-21	WASHER, STOPPER	
157	3-701-441-11	WASHER	
158	*4-907-981-01	SHEET (S)	
159	4-907-908-01	ROLLER	
160	X-4907-906-1	BRACKET ASSY, MARKER	
161	*4-907-973-01	MARKER, STANDARD	
162	4-885-767-00	SPRING, TENSION	
163	9-911-825-42	STRING, DIAL	
164	3-701-441-21	WASHER	
165	4-888-960-00	WHEEL, WORM	
166	3-573-122-00	BELT, TAKE-UP	
167	3-570-118-00	CUSHION, MOTOR	
168	X-4906-101-1	WORM ASSY	
169	*4-882-233-00	CASE, ACOUSTIC ABSORBER	
170	*4-907-943-01	BRACKET, MOTOR	
171	3-570-027-00	SCREW, MOTOR	
172	X-4907-905-2	BRACKET (REAR) ASSY, ROLLER	
173	4-905-842-01	WASHER, BENDING	
174	*4-907-940-01	SHEET, PROTECTION, LEAD WIRE	

No.	Part No.	Description	REMARKS
175	X-4907-910-1	PULLEY ASSY	
176	7-682-545-09	SCREW +B 3X4	
177	7-685-870-09	SCREW +BVTT 3X5 (S)	
178	7-628-253-95	SCREW +PS 2.6X4	
179	7-685-871-01	SCREW +BVTT 3X6 (S)	
180	7-623-422-07	LW 3, TYPE B	
181	7-624-106-04	STOP RING 3.0, TYPE -E	
182	7-623-616-01	EYELET, 2X3	
183	7-685-855-01	+BVTT 2X10 (S)	
184	7-682-546-09	SCREW +B 3X5	
185	7-624-190-31	STOP RING 4, TYPE-CS	
186	*4-907-903-01	BAR, GUIDE	
187	4-885-744-00	STOPPER, WIRE	
188	4-885-704-03	PULLEY, MOTOR	
189	A-4608-291-A	MOTOR ASSY	
190	*X-4907-913-1	FRAME ASSY	
191	4-888-902-00	SHAFT (A), WORM	
192	7-624-102-04	STOP RING 1.5, TYPE -E	
193	*4-907-990-01	REINFORCEMENT, MARKER	
912	*1-613-458-11	PC BOARD, LOADING SENSOR	
913	*1-613-459-11	PC BOARD, ARM	
914	*1-613-460-11	PC BOARD, SW	

The components identified by shading and mark ⚠ are critical for safety.
Replace only with part number specified.

Les composants identifiés par une trame et une marque ⚠ sont critiques pour la sécurité.
Ne les remplacer que par une pièce portant le numéro spécifié.

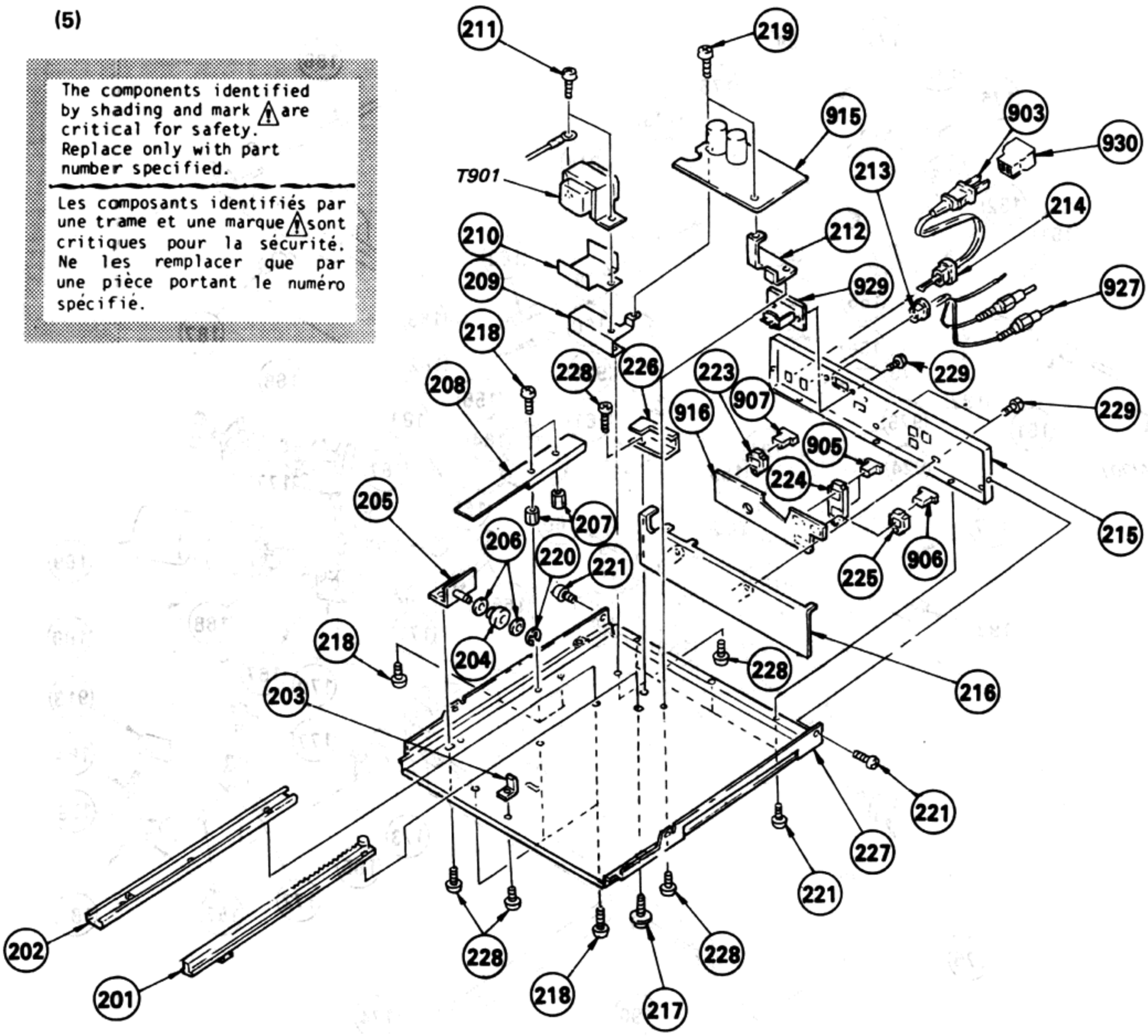

No.	Part No.	Description	REMARKS
201	4-907-951-01	PLATE, RACK	
202	X-4907-912-1	RAIL ASSY, SLIDE	
203	*4-907-902-01	PLATE (FRONT), FUNCTION, SWITCH	
204	4-907-908-01	ROLLER	
205	X-4907-911-1	BRACKET (LEFT) ASSY, ROLLER	
206	3-701-441-11	WASHER	
207	4-907-937-01	SUPPORT (A)	
208	*4-907-959-01	SHEET, RETAINER, LEAD WIRE	
209	*4-907-931-01	BRACKET, TRANSFORMER	
210	*4-907-979-01	PLATE, SHIELD	
211	3-703-249-01	SCREW, S TIGHT, +PTTWH 3X6	
212	*4-907-911-01	PLATE (REAR), FUNCTION,SWITCH	
213	3-703-244-00	BUSHING, CORD	
214	3-703-571-00	(US)....BUSHING (S), CORD	
	3-703-244-00	(Canadian,AEP,G-AEP,UK,E)..BUSHING, CORD	
215	*4-907-967-11	(G-AEP).....PLATE, REAR	
	*4-907-967-21	(US,Canadian)...PLATE, REAR	
	*4-907-967-41	(E).....PLATE, REAR	
	*4-907-967-51	(AEP).....PLATE, REAR	
216	*4-907-957-01	GUIDE, LEAD WIRE	
217	3-703-135-00	SCREW, TAPPING	
218	7-682-544-09	SCREW +B 3X3	
219	7-682-546-04	SCREW +BVTT 3X5 (S)	

No.	Part No.	Description	REMARKS
220	7-624-106-04	STOP RING 3.0, TYPE -E	
221	7-685-750-09	SCREW +PTT 3X5 (S)	
222	7-685-870-09	SCREW +BVTT 3X5 (S)	
223	*3-323-401-01	HOLDER (2 PIN), CONNECTOR	
224	*3-322-818-01	HOLDER, CONNECTOR	
225	*3-322-819-01	HOLDER, CONNECTOR	
226	*4-907-988-01	GUIDE, FRAME	
227	*4-907-971-01	PLATE, BOTTOM	
228	7-685-870-09	SCREW +BVTT 3X5 (S)	
229	7-682-546-09	SCREW +B 3X5	
903	⚠ 1-551-427-11	(AEP).....CORD, POWER	
	⚠ 1-551-472-00	(E).....CORD, POWER	
	⚠ 1-551-628-00	(US).....CORD, POWER	
	⚠ 1-551-964-00	(Canadian)...CORD, POWER	
	⚠ 1-556-560-00	(UK).....CORD, POWER	
905	*1-560-039-00	PIN, CONNECTOR	
906	*1-560-280-00	CONNECTOR PIN 3P	
907	*1-560-286-00	CONNECTOR PIN 2P	
915	*1-613-461-11	PC BOARD, POWER	
916	*1-613-462-11	PC BOARD, REMOTE CONTROL	
927	1-551-294-61	CORD (WITH PLUG)	
929	⚠ 1-552-535-00	(E)...SWITCH, VOLTAGE SELECTOR	
930	⚠ 1-526-565-00	(E)....AC PLUG ADAPTOR	

(6)

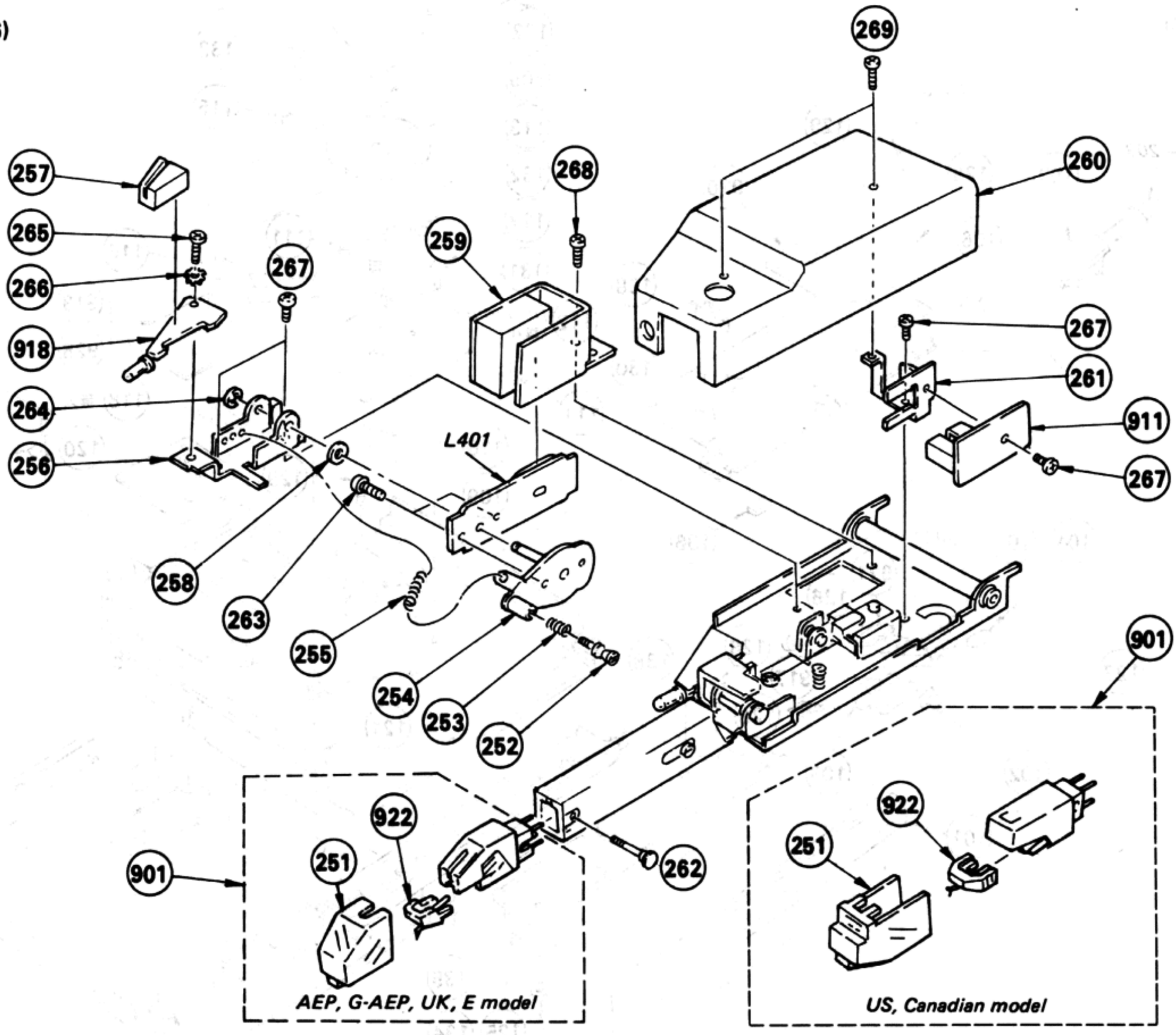

No.	Part No.	Description	REMARKS
251	4-903-347-01	(US).....COVER, STYLUS	
	2-332-001-01	(AEP,G-AEP,UK,E)...PROTECTOR, STYLUS	
252	4-885-706-04	SCREW, ADJUSTMENT, POSITION	
253	4-885-764-02	SPRING, COMPRESSION	
254	*X-4887-409-1	LEVER ASSY, LIFTER	
256	*4-887-437-01	BASE, LIFTER	
257	4-907-984-01	CUSHION, ARM LEAD	
258	3-701-437-21	WASHER	
259	X-4887-415-1	MAGNET ASSY, ARM	
260	*4-907-954-01	COVER, ARM	
261	*4-887-440-01	BRACKET, SENSOR	
262	4-885-746-00	SCREW, FITTING, CARTRIDGE	
263	7-621-772-00	SCREW +B 2X3	

No.	Part No.	Description	REMARKS
264	7-624-102-04	STOP RING 1.5, TYPE -E	
265	7-621-772-08	SCREW +B 2X3	
266	7-623-420-07	LW 2, TYPE B	
267	7-621-775-00	SCREW +B 2.6X3	
268	7-628-253-95	SCREW +PS 2.6X4	
269	7-627-553-37	SCREW, PRECISION +P 2X3	
901	A-4505-110-A	(AEP,G-AEP,UK,E)...CARTRIDGE COMPLATE ASSY (XL-300G)	
	1-549-117-00	(US,Canadian)...CARTRIDGE (VL-45G)(S)	
911	*1-612-356-21	PC BOARD, SENSOR	
918	*1-613-464-11	PC BOARD, PHONO	
922	A-4587-082-A	(AEP,G-AEP,UK,E)...STYLUS (ND-300G)	
	1-549-118-11	(US).....STYLUS (ND-145G)	

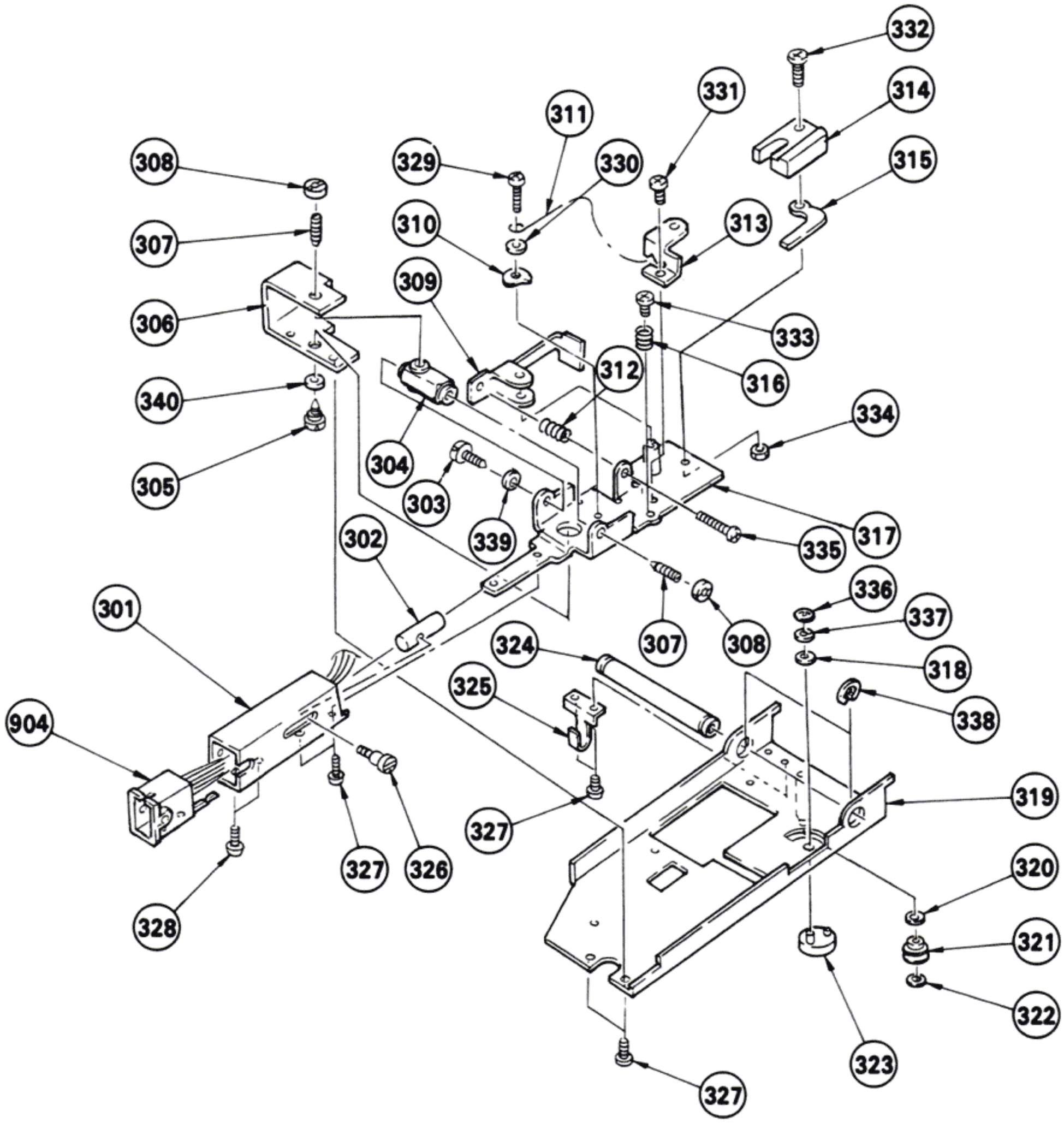

No.	Part No.	Description	REMARKS
301	4-907-923-01	PIPE, ARM	
302	4-885-770-00	WEIGHT, ADJUSTMENT	
303	4-877-816-00	SHAFT, PIVOT	
304	X-4907-909-1	HOLDER ASSY, BEARING	
305	4-887-449-01	SHAFT, PIVOT	
306	*4-907-921-01	BRIDGE, ARM	
307	2-203-518-61	SCREW, PIVOT	
308	2-203-519-00	NUT (A), LOCK, PIVOT	
309	*4-887-462-01	PLATE, ADJUSTMENT	
310	4-887-463-01	WASHER (B)	
311	4-885-737-00	WIRE	
312	4-887-461-01	SPRING, COMPRESSION	
313	*4-887-444-01	RETAINER, WIRE	
314	4-887-310-00	WEIGHT (A)	
315	4-885-768-00	WEIGHT (2)	
316	4-885-766-00	SPRING, COMPRESSION	
317	X-4907-908-1	JOINT ASSY, PIPE	
318	4-904-236-01	SPRING	
319	*X-4907-903-1	BASE ASSY, ARM	
320	3-701-441-11	WASHER	
321	4-907-995-01	ROLLER (A)	
322	3-558-708-21	WASHER, STOPPER	
323	4-907-944-01	CAM (B), ADJUSTMENT, L POSITION	
324	*4-907-920-01	SLIDER	
325	*4-907-934-01	LEVER, ARM DRIVING	
326	4-885-771-00	SCREW, ADJUSTMENT	
327	7-627-553-37	SCREW, PRECISION +P 2X3	
328	7-685-799-04	SCREW +PTT 1.7X2.5	
329	7-621-773-95	SCREW +B 2.6X6	
330	7-688-002-01	W 2.6, SMALL	
331	7-621-772-00	SCREW +B 2X3	
332	7-682-548-09	SCREW +B 3X8	
333	7-621-772-30	SCREW +B 2X6	
334	7-684-023-04	N 3, TYPE 2	
335	7-621-772-40	SCREW +B 2X8	
336	7-624-190-61	STOP RING 2.4, TYPE-CS	
337	7-688-002-11	W 2.6, MIDDLE	
338	7-624-133-44	STOP RING 9, TYPE-CE	
339	7-623-208-22	SW 3, TYPE 2	
340	7-688-003-01	W 3, SMALL	
904	1-556-552-00	CONNECTOR (PLUG IN TYPE)	

ELECTRICAL PARTS LIST

NOTE:
- Items marked " ★ " are not stocked since they are seldom required for routine service. Some delay should be anticipated when ordering these items.
- If there are two or more same circuitsin a set such as a stereophonic machine, only typical circuit parts may be indicated and capacitors and resistors in other same circuits may be omitted.

CAPACITORS:
MF:μF, PF:μμF.

RESISTORS
- All resistors are in ohms.
- F : nonflammable

COILS
- MMH : mH, UH : μH

SEMICONDUCTORS
In each case, U : μ, for example:
UA...: μA..., UPA...: μPA..., UPC...: μPC, UPD...: μPD...

The components identified by shading and mark ⚠ are critical for safety.
Replace only with part number specified.

Les composants identifiés par une trame et une marque ⚠ sont critiques pour la sécurité.
Ne les remplacer que par une pièce portant le numéro spécifié.

ELECTRICAL PARTS

Ref.No.	Part No.	Description
901	A-4505-110-A	(AEP,G-AEP,UK,E)...CARTRIDGE COMPLATE ASSY (XL-300G)
	1-549-117-00	(US,Canadian)...CARTRIDGE (VL-45G)(S)
902	*1-535-116-00	TERMINAL
903	⚠.1-551-427-11	(AEP).....CORD, POWER
	⚠.1-551-472-00	(E).....CORD, POWER
	⚠.1-551-628-00	(US).....CORD, POWER
	⚠.1-551-964-00	(Canadian)...CORD, POWER
	⚠.1-556-560-00	(UK).....CORD, POWER
904	1-556-552-00	CONNECTOR (PLUG IN TYPE)
905	*1-560-039-00	PIN, CONNECTOR
906	*1-560-280-00	CONNECTOR PIN 3P
907	*1-560-286-00	CONNECTOR PIN 2P
908	1-564-722-11	PIN, CONNECTOR (SMALL TYPE) 6P
909	*1-608-883-00	PC BOARD, FG
910	*1-610-415-00	PC BOARD, RECORD SENSOR
911	*1-612-356-21	PC BOARD, SENSOR
912	*1-613-458-11	PC BOARD, LOADING SENSOR
913	*1-613-459-11	PC BOARD, ARM
914	*1-613-460-11	PC BOARD, SW
915	*1-613-461-11	PC BOARD, POWER
916	*1-613-462-11	PC BOARD, REMOTE CONTROL
917	*1-613-463-11	PC BOARD, RMS
918	*1-613-464-11	PC BOARD, PHONO
919	*1-613-465-11	PC BOARD, SERVO AMP
920	*1-613-466-11	PC BOARD, SYSTEM CONTROL
921	*1-613-467-11	PC BOARD, POWER SW
922	A-4587-082-A	(AEP,G-AEP,UK,E)...STYLUS (ND-300G)
	1-5497118211	(US).....STYLUS (ND-145G)
927	1-551-294-61	CORD (WITH PLUG)
928	*A-4619-249-A	MOUNTED PCB, SERVO
929	⚠.1-552-535-00	(E)....SWITCH, VOLTAGE SELECTOR
930	⚠.1-526-565-00	(E)....AC PLUG ADAPTOR
BA101	1-528-120-00	BATTERY, LITHIUM (CR-2025)

C101	1-162-113-00	CERAMIC	0.01MF	30%	16V
C102	1-123-611-00	ELECT	1MF	20%	50V
C103	1-123-647-00	ELECT	47MF	20%	6.3V
C104	1-123-821-00	ELECT	47MF	20%	16V
C105	1-123-821-00	ELECT	47MF	20%	16V
C106	1-123-612-00	ELECT	2.2MF	20%	50V
C107	1-162-113-00	CERAMIC	0.01MF	30%	16V
C108	1-162-113-00	CERAMIC	0.01MF	30%	16V
C109	1-161-380-00	CERAMIC	0.0015MF	10%	50V
C110	1-123-820-00	ELECT	33MF	20%	16V
C111	1-162-110-00	CERAMIC	0.001MF	10%	50V
C112	1-162-113-00	CERAMIC	0.01MF	30%	16V

ELECTRICAL PARTS

Ref.No.	Part No.	Description			
C113	1-123-646-00	ELECT	33MF	20%	6.3V
C114	1-123-646-00	ELECT	33MF	20%	6.3V
C115	1-162-110-00	CERAMIC	0.001MF	10%	50V
C116	1-162-110-00	CERAMIC	0.001MF	10%	50V
C117	1-162-100-00	CERAMIC	150PF	10%	50V
C118	1-162-100-00	CERAMIC	150PF	10%	50V
C119	1-162-052-00	CERAMIC	22PF	5%	50V
C120	1-162-027-00	CERAMIC	39PF	5%	50V
C121	1-123-647-00	ELECT	47MF	20%	6.3V
C122	1-162-113-00	CERAMIC	0.01MF	30%	16V
C123	1-123-617-00	ELECT	10MF	20%	16V
C124	1-162-113-00	CERAMIC	0.01MF	30%	16V
C125	1-123-619-00	ELECT	4.7MF	20%	50V
C126	1-123-617-00	ELECT	10MF	20%	16V
C128	1-161-494-00	CERAMIC	0.022MF	30%	25V
C129	1-161-494-00	CERAMIC	0.022MF	30%	25V
C130	1-123-617-00	ELECT	10MF	20%	16V
C132	1-161-494-00	CERAMIC	0.022MF	30%	25V
C133	1-162-110-00	CERAMIC	0.001MF	10%	50V
C134	1-123-607-00	ELECT	0.1MF	20%	50V
C135	1-162-110-00	CERAMIC	0.001MF	10%	50V
C136	1-162-113-00	CERAMIC	0.01MF	30%	16V
C137	1-162-113-00	CERAMIC	0.01MF	30%	16V
C138	1-123-611-00	ELECT	1MF	20%	50V
C301	1-161-494-00	CERAMIC	0.022MF	30%	25V
C302	1-123-647-00	ELECT	47MF	20%	6.3V
C303	1-123-619-00	ELECT	4.7MF	20%	50V
C304	1-162-102-00	CERAMIC	220PF	10%	50V
C305	1-161-494-00	CERAMIC	0.022MF	30%	25V
C306	1-130-885-00	FILM	0.15MF	5%	50V
C307	1-123-610-00	ELECT	0.47MF	20%	50V
C308	1-123-622-00	ELECT	22MF	20%	16V
C309	1-123-619-00	ELECT	4.7MF	20%	50V
C310	1-123-610-00	ELECT	0.47MF	20%	50V
C311	1-162-113-00	CERAMIC	0.01MF	30%	16V
C312	1-162-113-00	CERAMIC	0.01MF	30%	16V
C313	1-123-821-00	ELECT	47MF	20%	16V
C314	1-123-821-00	ELECT	47MF	20%	16V
C315	1-162-113-00	CERAMIC	0.01MF	30%	16V
C501	1-123-349-00	ELECT	1000MF	20%	35V
C502	1-123-349-00	ELECT	1000MF	20%	35V
CN101	*1-564-705-11	PIN, CONNECTOR (SMALL TYPE) 3P			
CN102	*1-564-336-00	PIN, CONNECTOR 2P			
CN103	*1-564-709-11	PIN, CONNECTOR (SMALL TYPE) 7P			
CN104	*1-564-337-00	PIN, CONNECTOR 3P			

ELECTRICAL PARTS

Ref.No.	Part No.	Description
CN105	*1-564-337-00	PIN, CONNECTOR 3P
CN106	*1-560-708-00	PIN, CONNECTOR 2P
CN107	*1-560-708-00	PIN, CONNECTOR 2P
CN108	*1-564-341-11	PIN, CONNECTOR 7P
CN109	*1-560-605-00	PIN, CONNECTOR 6P
CN110	*1-564-341-11	PIN, CONNECTOR 7P
CN111	*1-564-339-00	PIN, CONNECTOR 5P
CN301	*1-564-341-11	PIN, CONNECTOR 7P
CN401	*1-560-602-00	PIN, CONNECTOR 3P
CN402	*1-564-708-11	PIN, CONNECTOR (SMALL TYPE) 6P
CP105	1-235-385-11	ENCAPSULATED COMPONENT
D101	8-719-911-19	DIODE 1SS119
D102	8-719-911-19	DIODE 1SS119
D103	8-719-911-19	DIODE 1SS119
D104	8-719-911-19	DIODE 1SS119
D105	8-719-911-19	DIODE 1SS119
D106	8-719-911-19	DIODE 1SS119
D107	8-719-911-19	DIODE 1SS119
D108	8-719-911-19	DIODE 1SS119
D109	8-719-911-19	DIODE 1SS119
D110	8-719-911-19	DIODE 1SS119
D111	8-719-911-19	DIODE 1SS119
D112	8-719-911-19	DIODE 1SS119
D113	8-719-911-19	DIODE 1SS119
D114	8-719-911-19	DIODE 1SS119
D115	8-719-911-19	DIODE 1SS119
D116	8-719-911-19	DIODE 1SS119
D117	8-719-911-19	DIODE 1SS119
D118	8-719-911-19	DIODE 1SS119
D119	8-719-911-19	DIODE 1SS119
D120	8-719-911-19	DIODE 1SS119
D121	8-719-911-19	DIODE 1SS119
D122	8-719-911-19	DIODE 1SS119
D123	8-719-911-19	DIODE 1SS119
D124	8-719-911-19	DIODE 1SS119
D125	8-719-911-19	DIODE 1SS119
D126	8-719-911-19	DIODE 1SS119
D127	8-719-911-19	DIODE 1SS119
D128	8-719-911-19	DIODE 1SS119
D129	8-719-911-19	DIODE 1SS119
D150	8-719-000-06	DIODE MC921
D151	8-719-000-06	DIODE MC921
D152	8-719-000-06	DIODE MC921
D153	8-719-000-06	DIODE MC921
D154	8-719-000-06	DIODE MC921
D155	8-719-000-06	DIODE MC921

ELECTRICAL PARTS

Ref.No.	Part No.	Description
D156	8-719-000-06	DIODE MC921
D157	8-719-000-06	DIODE MC921
D158	8-719-000-06	DIODE MC921
D159	8-719-000-06	DIODE MC921
D201	8-719-906-58	DIODE GL-5HD21
D202	8-719-906-58	DIODE GL-5HD21
D203	8-719-906-58	DIODE GL-5HD21
D250	8-719-100-36	DIODE RD5.6EB3
D251	8-719-100-55	DIODE TD9.1EB3
D401	8-719-919-70	DIODE GL-9NG4A
D402	8-719-919-70	DIODE GL-9NG4A
D403	8-719-918-70	DIODE LB-202DB
D404	8-719-900-57	DIODE GL-5HY5
D501	8-719-510-01	DIODE S1RBA10
D502	8-719-100-30	DIODE RD5.1EB2
H301	8-719-800-17	DIODE THS102A
H302	8-719-800-17	DIODE THS102A
H303	8-719-800-17	DIODE THS102A
IC101	8-759-801-78	IC LM6402G-476
IC102	8-759-602-17	IC M50761-413P
IC103	8-759-201-33	IC TC5501P
IC104	8-759-240-71	IC TC4071BP
IC105	8-759-909-95	IC BA715
IC106	8-759-909-95	IC BA715
IC107	8-759-202-01	IC TA7256P
IC108	8-759-909-95	IC BA715
IC109	8-759-600-02	IC M5218L
IC301	8-759-600-02	IC M5218L
IC302	8-759-602-65	IC CX-065B
IC303	8-759-909-95	IC BA715
L401	1-422-162-11	COIL
Q101	8-729-202-02	TRANSISTOR 2SB1015-Y
Q102	8-729-201-78	TRANSISTOR 2SD1406-Y
Q103	8-729-204-83	TRANSISTOR 2SA1048-GR
Q104	8-729-204-83	TRANSISTOR 2SA1048-GR
Q105	8-729-177-32	TRANSISTOR 2SD773
Q106	8-729-178-55	TRANSISTOR 2SC2785E
Q107	8-729-178-55	TRANSISTOR 2SC2785E
Q108	8-729-178-55	TRANSISTOR 2SC2785E
Q109	8-729-900-89	TRANSISTOR DTC144ES
Q110	8-729-600-08	TRANSISTOR 2SK381-E
Q111	8-729-900-61	TRANSISTOR DTA114ES
Q112	8-729-900-89	TRANSISTOR DTC144ES
Q113	8-729-900-30	TRANSISTOR DTA144ES
Q115	8-729-900-89	TRANSISTOR DTC144ES
Q116	8-729-900-30	TRANSISTOR DTA144ES

ELECTRICAL PARTS

Ref.No.	Part No.	Description
Q117	8-729-900-80	TRANSISTOR DTC114ES
Q118	8-729-802-22	TRANSISTOR 2SB1014
Q119	8-729-802-22	TRANSISTOR 2SB1014
Q120	8-729-900-89	TRANSISTOR DTC144ES
Q121	8-729-900-89	TRANSISTOR DTC144ES
Q122	8-729-204-83	TRANSISTOR 2SA1048-GR
Q123	8-729-900-80	TRANSISTOR DTC114ES
Q124	8-729-900-89	TRANSISTOR DTC144ES
Q125	8-729-900-30	TRANSISTOR DTA144ES
Q126	8-729-204-83	TRANSISTOR 2SA1048-GR
Q127	8-729-900-30	TRANSISTOR DTA144ES
Q128	8-729-900-89	TRANSISTOR DTC144ES
Q301	8-729-204-83	TRANSISTOR 2SA1048-GR
Q302	8-729-178-55	TRANSISTOR 2SC2785E
Q303	8-729-177-32	TRANSISTOR 2SD773
Q304	8-729-113-32	TRANSISTOR 2SB733
Q305	8-729-177-32	TRANSISTOR 2SD773
Q306	8-729-113-32	TRANSISTOR 2SB733
Q401	8-719-918-74	DIODE GP-1S04
Q402	8-719-918-74	DIODE GP-1S04
Q403	8-719-411-28	DIODE ON1128
Q404	1-806-664-11	PHOTO COUPLER (REFLECTION TYPE)
R101⚠	**1-217-383-00**	**FUSIBLE 4.7 5% 1/4W F**
R102	1-247-848-00	CARBON 5.1K 5% 1/6W
R103	1-247-127-00	CARBON 680 5% 1/4W
R104	1-247-854-00	CARBON 9.1K 5% 1/6W
R105	1-247-855-00	CARBON 10K 5% 1/6W
R106	1-247-848-00	CARBON 5.1K 5% 1/6W
R107	1-247-815-00	CARBON 220 5% 1/6W
R108	1-247-847-00	CARBON 4.7K 5% 1/6W
R109	1-244-842-00	CARBON 51 5% 1/2W
R110⚠	**1-217-383-00**	**FUSIBLE 4.7 5% 1/4W F**
R111	1-247-127-00	CARBON 680 5% 1/4W
R112	1-247-855-00	CARBON 10K 5% 1/6W
R113	1-247-854-00	CARBON 9.1K 5% 1/6W
R114	1-247-855-00	CARBON 10K 5% 1/6W
R115	1-247-855-00	CARBON 10K 5% 1/6W
R116	1-247-843-00	CARBON 3.3K 5% 1/6W
R117	1-247-891-00	CARBON 330K 5% 1/6W
R118	1-247-903-00	CARBON 1M 5% 1/6W
R119	1-247-875-00	CARBON 68K 5% 1/6W
R120	1-247-807-00	CARBON 100 5% 1/6W
R121	1-247-847-00	CARBON 4.7K 5% 1/6W
R122	1-247-851-00	CARBON 6.8K 5% 1/6W
R123	1-247-903-00	CARBON 1M 5% 1/6W
R124⚠	**1-213-132-11**	**METAL OXIDE 120 5% 1W F**

ELECTRICAL PARTS

Ref.No.	Part No.	Description			
R125	1-247-825-00	CARBON	560	5%	1/6W
R126	1-247-813-00	CARBON	180	5%	1/6W
R127	1-247-810-00	CARBON	130	5%	1/6W
R128	1-247-822-00	CARBON	430	5%	1/6W
R129	1-247-848-00	CARBON	5.1K	5%	1/6W
R130	1-247-855-00	CARBON	10K	5%	1/6W
R131	1-247-855-00	CARBON	10K	5%	1/6W
R132	1-247-903-00	CARBON	1M	5%	1/6W
R133	1-247-867-00	CARBON	33K	5%	1/6W
R134	1-247-865-00	CARBON	27K	5%	1/6W
R135	1-247-855-00	CARBON	10K	5%	1/6W
R136	1-247-851-00	CARBON	6.8K	5%	1/6W
R137	1-247-855-00	CARBON	10K	5%	1/6W
R138	1-247-855-00	CARBON	10K	5%	1/6W
R139	1-247-807-00	CARBON	100	5%	1/6W
R140	1-247-855-00	CARBON	10K	5%	1/6W
R145	1-247-855-00	CARBON	10K	5%	1/6W
R146	1-247-855-00	CARBON	10K	5%	1/6W
R147	1-247-865-00	CARBON	27K	5%	1/6W
R148	1-247-867-00	CARBON	33K	5%	1/6W
R149	1-247-879-00	CARBON	100K	5%	1/6W
R150	1-247-863-00	CARBON	22K	5%	1/6W
R151	1-247-855-00	CARBON	10K	5%	1/6W
R152	1-247-855-00	CARBON	10K	5%	1/6W
R153	1-247-867-00	CARBON	33K	5%	1/6W
R154	1-247-855-00	CARBON	10K	5%	1/6W
R155	1-247-855-00	CARBON	10K	5%	1/6W
R156	1-247-831-00	CARBON	1K	5%	1/6W
R157	1-247-903-00	CARBON	1M	5%	1/6W
R158	1-247-831-00	CARBON	1K	5%	1/6W
R159	1-247-847-00	CARBON	4.7K	5%	1/6W
R160	1-247-847-00	CARBON	4.7K	5%	1/6W
R161	1-247-847-00	CARBON	4.7K	5%	1/6W
R162	1-247-847-00	CARBON	4.7K	5%	1/6W
R163	1-247-861-00	CARBON	18K	5%	1/6W
R164	1-247-861-00	CARBON	18K	5%	1/6W
R165	1-247-861-00	CARBON	18K	5%	1/6W
R166	1-247-861-00	CARBON	18K	5%	1/6W
R167	1-247-831-00	CARBON	1K	5%	1/6W
R168	1-247-831-00	CARBON	1K	5%	1/6W
R169	1-247-831-00	CARBON	1K	5%	1/6W
R170	1-247-831-00	CARBON	1K	5%	1/6W
R171	1-247-855-00	CARBON	10K	5%	1/6W
R172	1-247-855-00	CARBON	10K	5%	1/6W
R173	1-247-855-00	CARBON	10K	5%	1/6W

The components identified by shading and mark ⚠ are critical for safety.
Replace only with part number specified.

Les composants identifiés par une trame et une marque ⚠ sont critiques pour la sécurité.
Ne les remplacer que par une pièce portant le numéro spécifié.

ELECTRICAL PARTS

Ref.No.	Part No.	Description			
R174	1-247-855-00	CARBON	10K	5%	1/6W
R175	1-247-903-00	CARBON	1M	5%	1/6W
R176	1-247-831-00	CARBON	1K	5%	1/6W
R177	1-247-831-00	CARBON	1K	5%	1/6W
R178	1-247-831-00	CARBON	1K	5%	1/6W
R179	1-247-831-00	CARBON	1K	5%	1/6W
R180	1-247-831-00	CARBON	1K	5%	1/6W
R181	1-247-817-00	CARBON	270	5%	1/6W
R182	1-247-817-00	CARBON	270	5%	1/6W
R183	1-247-817-00	CARBON	270	5%	1/6W
R184	1-247-817-00	CARBON	270	5%	1/6W
R185	1-247-817-00	CARBON	270	5%	1/6W
R186	1-247-817-00	CARBON	270	5%	1/6W
R187	1-247-817-00	CARBON	270	5%	1/6W
R189	1-247-815-00	CARBON	220	5%	1/6W
R190	1-247-815-00	CARBON	220	5%	1/6W
R191	1-247-861-00	CARBON	18K	5%	1/6W
R192	1-247-861-00	CARBON	18K	5%	1/6W
R193	1-247-861-00	CARBON	18K	5%	1/6W
R194	1-247-847-00	CARBON	4.7K	5%	1/6W
R195	1-247-847-00	CARBON	4.7K	5%	1/6W
R196	1-247-847-00	CARBON	4.7K	5%	1/6W
R197	1-247-854-00	CARBON	9.1K	5%	1/6W
R198	1-247-831-00	CARBON	1K	5%	1/6W
R199	1-247-831-00	CARBON	1K	5%	1/6W
R200	1-247-831-00	CARBON	1K	5%	1/6W
R201	1-247-831-00	CARBON	1K	5%	1/6W
R202	1-247-831-00	CARBON	1K	5%	1/6W
R203	1-247-831-00	CARBON	1K	5%	1/6W
R204	1-247-831-00	CARBON	1K	5%	1/6W
R205	1-247-831-00	CARBON	1K	5%	1/6W
R206	1-247-847-00	CARBON	4.7K	5%	1/6W
R207	1-247-831-00	CARBON	1K	5%	1/6W
R208	1-247-831-00	CARBON	1K	5%	1/6W
R209	1-247-855-00	CARBON	10K	5%	1/6W
R210	1-247-855-00	CARBON	10K	5%	1/6W
R211	1-247-807-00	CARBON	100	5%	1/6W
R212	1-247-847-00	CARBON	4.7K	5%	1/6W
R213	1-247-879-00	CARBON	100K	5%	1/6W
R214	1-247-879-00	CARBON	100K	5%	1/6W
R215	1-247-865-00	CARBON	27K	5%	1/6W
R216	1-247-867-00	CARBON	33K	5%	1/6W
R217	1-247-853-00	CARBON	8.2K	5%	1/6W
R218	1-247-845-00	CARBON	3.9K	5%	1/6W
R219	1-247-861-00	CARBON	18K	5%	1/6W

ELECTRICAL PARTS

Ref.No.	Part No.	Description			
R220	1-247-855-00	CARBON	10K	5%	1/6W
R221	1-247-855-00	CARBON	10K	5%	1/6W
R222	1-247-855-00	CARBON	10K	5%	1/6W
R223	1-247-855-00	CARBON	10K	5%	1/6W
R224	1-247-855-00	CARBON	10K	5%	1/6W
R225	1-247-878-00	CARBON	91K	5%	1/6W
R226	1-247-879-00	CARBON	100K	5%	1/6W
R227	1-247-891-00	CARBON	330K	5%	1/6W
R228	1-247-887-00	CARBON	220K	5%	1/6W
R229	1-247-887-00	CARBON	220K	5%	1/6W
R230	1-247-855-00	CARBON	10K	5%	1/6W
R231	1-247-855-00	CARBON	10K	5%	1/6W
R232	1-247-855-00	CARBON	10K	5%	1/6W
R233	1-247-855-00	CARBON	10K	5%	1/6W
R234	1-247-882-00	CARBON	130K	5%	1/6W
R235	1-247-887-00	CARBON	220K	5%	1/6W
R236	1-247-771-00	CARBON	3.3	5%	1/6W
R237	1-247-795-00	CARBON	33	5%	1/6W
R238	1-247-795-00	CARBON	33	5%	1/6W
R239	1-247-887-00	CARBON	220K	5%	1/6W
R240	1-247-855-00	CARBON	10K	5%	1/6W
R241	1-247-831-00	CARBON	1K	5%	1/6W
R242	1-247-831-00	CARBON	1K	5%	1/6W
R243	1-247-825-00	CARBON	560	5%	1/6W
R244	1-247-855-00	CARBON	10K	5%	1/6W
R245	1-247-831-00	CARBON	1K	5%	1/6W
R246	1-247-855-00	CARBON	10K	5%	1/6W
R247	1-247-817-00	CARBON	270	5%	1/6W
R248	1-247-817-00	CARBON	270	5%	1/6W
R249	1-247-817-00	CARBON	270	5%	1/6W
R250	1-247-848-00	CARBON	5.1K	5%	1/6W
R252	1-247-855-00	CARBON	10K	5%	1/6W
R253	1-247-896-00	CARBON	510K	5%	1/6W
R254	1-247-831-00	CARBON	1K	5%	1/6W
R255	1-247-831-00	CARBON	1K	5%	1/6W
R256	1-247-896-00	CARBON	510K	5%	1/6W
R257	1-247-867-00	CARBON	33K	5%	1/6W
R258	1-247-867-00	CARBON	33K	5%	1/6W
R259	1-247-855-00	CARBON	10K	5%	1/6W
R260	1-247-857-00	CARBON	12K	5%	1/6W
R261	1-247-888-00	CARBON	240K	5%	1/6W
R262	1-247-903-00	CARBON	1M	5%	1/6W
R263	1-247-864-00	CARBON	24K	5%	1/6W
R265	1-247-903-00	CARBON	1M	5%	1/6W
R266	1-247-879-00	CARBON	100K	5%	1/6W

ELECTRICAL PARTS

Ref.No.	Part No.	Description			
R267	1-247-115-00	CARBON	220	5%	1/4W
R268	1-247-800-00	CARBON	51	5%	1/6W
R269	1-247-831-00	CARBON	1K	5%	1/6W
R270	1-247-771-00	CARBON	3.3	5%	1/6W
R271	1-247-855-00	CARBON	10K	5%	1/6W
R272	1-247-831-00	CARBON	1K	5%	1/6W
R273	1-247-863-00	CARBON	22K	5%	1/6W
R274	1-247-848-00	CARBON	5.1K	5%	1/6W
R275	1-247-863-00	CARBON	22K	5%	1/6W
R276	1-247-848-00	CARBON	5.1K	5%	1/6W
R301	1-247-807-00	CARBON	100	5%	1/6W
R302	1-247-887-00	CARBON	220K	5%	1/6W
R303	1-247-839-00	CARBON	2.2K	5%	1/6W
R304	1-247-869-00	CARBON	39K	5%	1/6W
R305	1-247-855-00	CARBON	10K	5%	1/6W
R306	1-247-839-00	CARBON	2.2K	5%	1/6W
R307	1-247-903-00	CARBON	1M	5%	1/6W
R308	1-214-767-00	METAL	39K	1%	1/4W
R309	1-214-779-00	METAL	120K	1%	1/4W
R311	1-247-855-00	CARBON	10K	5%	1/6W
R312	1-247-815-00	CARBON	220	5%	1/6W
R313	1-247-847-00	CARBON	4.7K	5%	1/6W
R314	1-247-847-00	CARBON	4.7K	5%	1/6W
R315	1-247-835-00	CARBON	1.5K	5%	1/6W
R316	1-247-893-00	CARBON	390K	5%	1/6W
R317	1-247-843-00	CARBON	3.3K	5%	1/6W
R318	1-247-843-00	CARBON	3.3K	5%	1/6W
R319	1-247-893-00	CARBON	390K	5%	1/6W
R320	1-247-843-00	CARBON	3.3K	5%	1/6W
R321	1-247-843-00	CARBON	3.3K	5%	1/6W
R322	1-247-895-00	CARBON	470K	5%	1/6W
R323	1-247-895-00	CARBON	470K	5%	1/6W
R324	1-247-895-00	CARBON	470K	5%	1/6W
R325	1-247-807-00	CARBON	100	5%	1/6W
R326	1-247-807-00	CARBON	100	5%	1/6W
R327	1-247-895-00	CARBON	470K	5%	1/6W
R501	1-247-831-00	CARBON	1K	5%	1/6W
R502	1-247-807-00	CARBON	100	5%	1/6W
R503	1-247-783-00	CARBON	10	5%	1/6W
RV101	1-226-240-00	RES, ADJ, CARBON 200K			
RV102	1-226-241-00	RES, ADJ, CARBON 500K			
RV103	1-228-542-00	RES, ADJ, METAL GLAZE 10K			
RV104	1-228-542-00	RES, ADJ, METAL GLAZE 10K			
RV301	1-228-238-00	RES, ADJ, METAL GLAZE 20K			
RV302	1-228-239-00	RES, ADJ, METAL GLAZE 50K			

ELECTRICAL PARTS

Ref.No.	Part No.	Description
RV303	1-226-234-00	RES, ADJ, CARBON 2K
RV304	1-226-234-00	RES, ADJ, CARBON 2K
RV305	1-226-235-00	RES, ADJ, CARBON 5K
RV306	1-226-235-00	RES, ADJ, CARBON 5K
RY401	1-515-519-00	RELAY
S101	1-554-088-00	SWITCH, KEY BOARD
S102	1-554-088-00	SWITCH, KEY BOARD
S103	1-554-088-00	SWITCH, KEY BOARD
S104	1-554-088-00	SWITCH, KEY BOARD
S105	1-554-088-00	SWITCH, KEY BOARD
S106	1-554-088-00	SWITCH, KEY BOARD
S107	1-554-088-00	SWITCH, KEY BOARD
S108	1-554-088-00	SWITCH, KEY BOARD
S109	1-554-088-00	SWITCH, KEY BOARD
S110	1-554-088-00	SWITCH, KEY BOARD
S111	1-554-088-00	SWITCH, KEY BOARD
S112	1-554-088-00	SWITCH, KEY BOARD
S113	1-554-088-00	SWITCH, KEY BOARD
S114	1-554-088-00	SWITCH, KEY BOARD
S115	1-554-088-00	SWITCH, KEY BOARD
S116	1-554-088-00	SWITCH, KEY BOARD
S117	1-554-088-00	SWITCH, KEY BOARD
S118	1-554-088-00	SWITCH, KEY BOARD
S201	1-552-339-00	SWITCH, SLIDE (SENSITIVITY)
S401 ⚠	**1-570-043-11**	**SWITCH, PUSH (1 KEY)(POWER)**
S402	1-554-921-11	SWITCH, MICRO (APM REST)
S403	1-554-205-00	SWITCH, PUSH (CLOSE)
S404	1-554-205-00	SWITCH, PUSH (OPEN)
T901 ⚠	**1-446-851-00**	**(E).....TRANSFORMER, POWER**
T901 ⚠	**1-447-124-00**	**(AEP,G-AEP,UK)...TRANSFORMER, POWER**
T901 ⚠	**1-447-125-00**	**(US,Canadian)....TRANSFORMER, POWER**
TP101	*1-564-336-00	PIN, CONNECTOR 2P
TP102	*1-564-337-00	PIN, CONNECTOR 3P
TP103	*1-564-336-00	PIN, CONNECTOR 2P
TP104	*1-564-336-00	PIN, CONNECTOR 2P
TP105	*1-564-338-00	PIN, CONNECTOR 4P
TP106	*1-564-336-00	PIN, CONNECTOR 2P
X101	1-567-192-11	OSCILLATOR, CERAMIC
X102	1-527-532-00	OSCILLATOR, CERAMIC

The components identified by shading and mark ⚠ are critical for safety.
Replace only with part number specified.

Les composants identifiés par une trame et une marque ⚠ sont critiques pour la sécurité.
Ne les remplacer que par une pièce portant le numéro spécifié.

ACCESSORY & PACKING MATERIAL

Part No.	Description
⚠.1-526-565-00	(E3)...AC PLUG ADAPTOR
1-556-372-41	CORD, CONNECTION (4 CORE)
1-557-109-21	CORD, CONNECTION
3-532-616-00	BAG, POLYETHYLENE
3-610-931-11	SPACER, SHAFT, DRUM, HEAD
3-701-616-00	BAG, POLYETHYLENE
3-701-630-00	BAG, POLYETHYLENE
3-701-634-00	BAG, POLYETHYLENE
3-701-806-00	ADAPTOR, 45RPM, (E)
3-760-118-11	(US,Canadian,AEP,UK,E)... MANUAL, INSTRUCTION
3-760-118-41	(AEP,G-AEP)...MANUAL, INSTRUCTION
3-795-753-21	(US)...INSTRUCTION
4-808-459-51	SCREW (B), MOTOR LOCK
4-885-782-00	PROTECTOR (B)
4-888-942-00	SCREWDRIVER, ADJUSTMENT
4-907-918-01	LOCK, TRANSPORT
4-907-919-01	LOCK, TRANSPORT, ARM
4-907-974-01	CUSHION (RIGHT)
4-907-975-01	CUSHION (LEFT)
4-907-978-01	HOLDER, TURNTABLE
4-907-985-01	PROTECTOR (SMALL)
4-907-986-01	CUSHION, ARM
4-907-987-01	SCREW, TRANSPORT
4-907-992-01	SLEEVE, TRANSPORT
4-907-996-01	INDIVIDUAL CARTON
7-682-557-09	SCREW +B 3X40

The components identified by shading and mark ⚠ are critical for safety.
Replace only with part number specified.

Les composants identifiés par une trame et une marque ⚠ sont critiques pour la sécurité.
Ne les remplacer que par une pièce portant le numéro spécifié.

9-951-584-11

Sony Corporation

English
85A0589-1
Printed in Japan
1985