Deze download wordt u gratis aangeboden door Pick-upnaalden.nl

Web	:	www.pickupnaalden.com
Email	:	info@pick-upnaalden.nl
Facebook	:	www.facebook.com/pickupnaalden
Twitter	:	twitter.com/Pickupnaalden
Google+	:	https://plus.google.com/+FCaris_pickupnaalden

1. BLOCK DIAGRAM

1) SR-737/SR-7090

Fig. 1-1

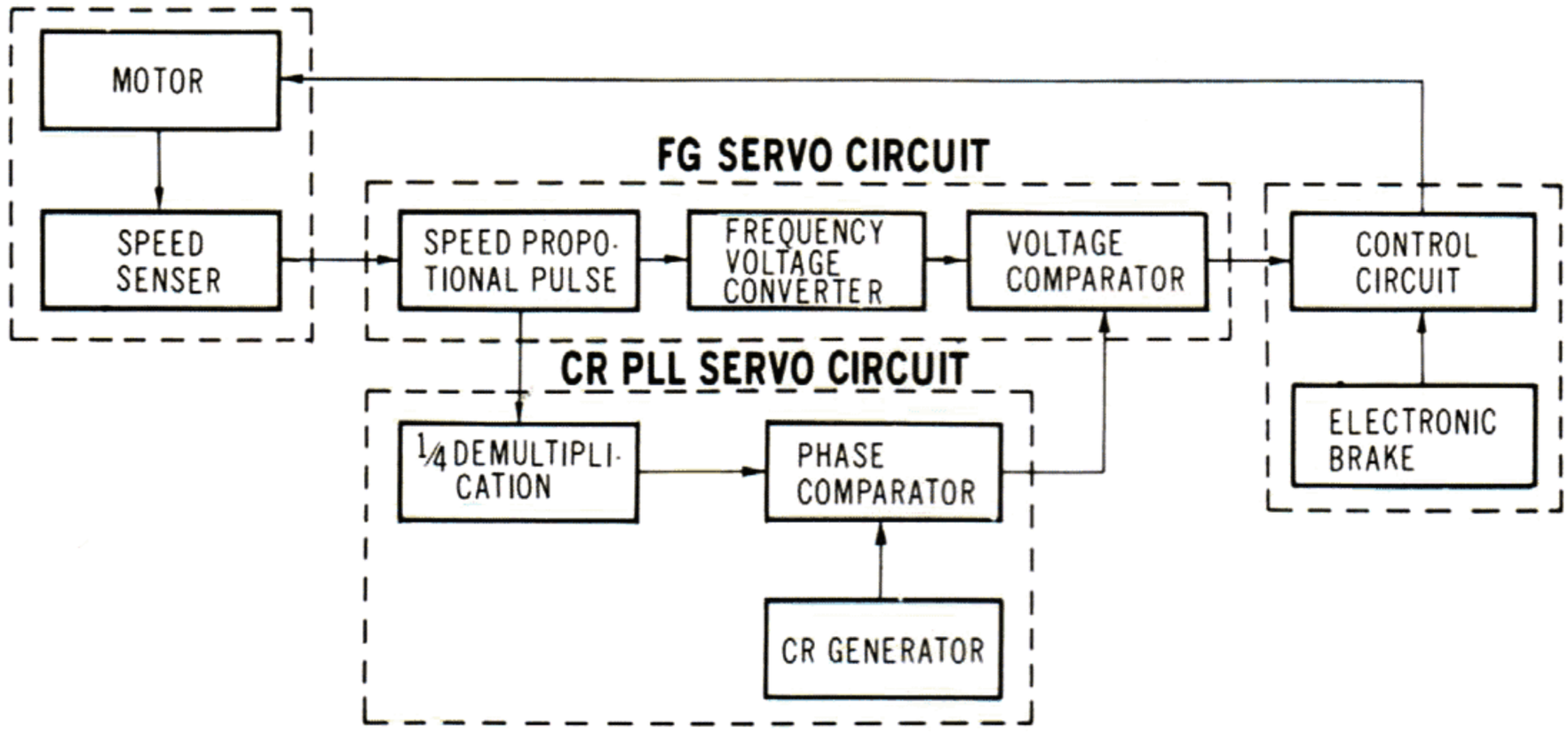

Fig. 1-2

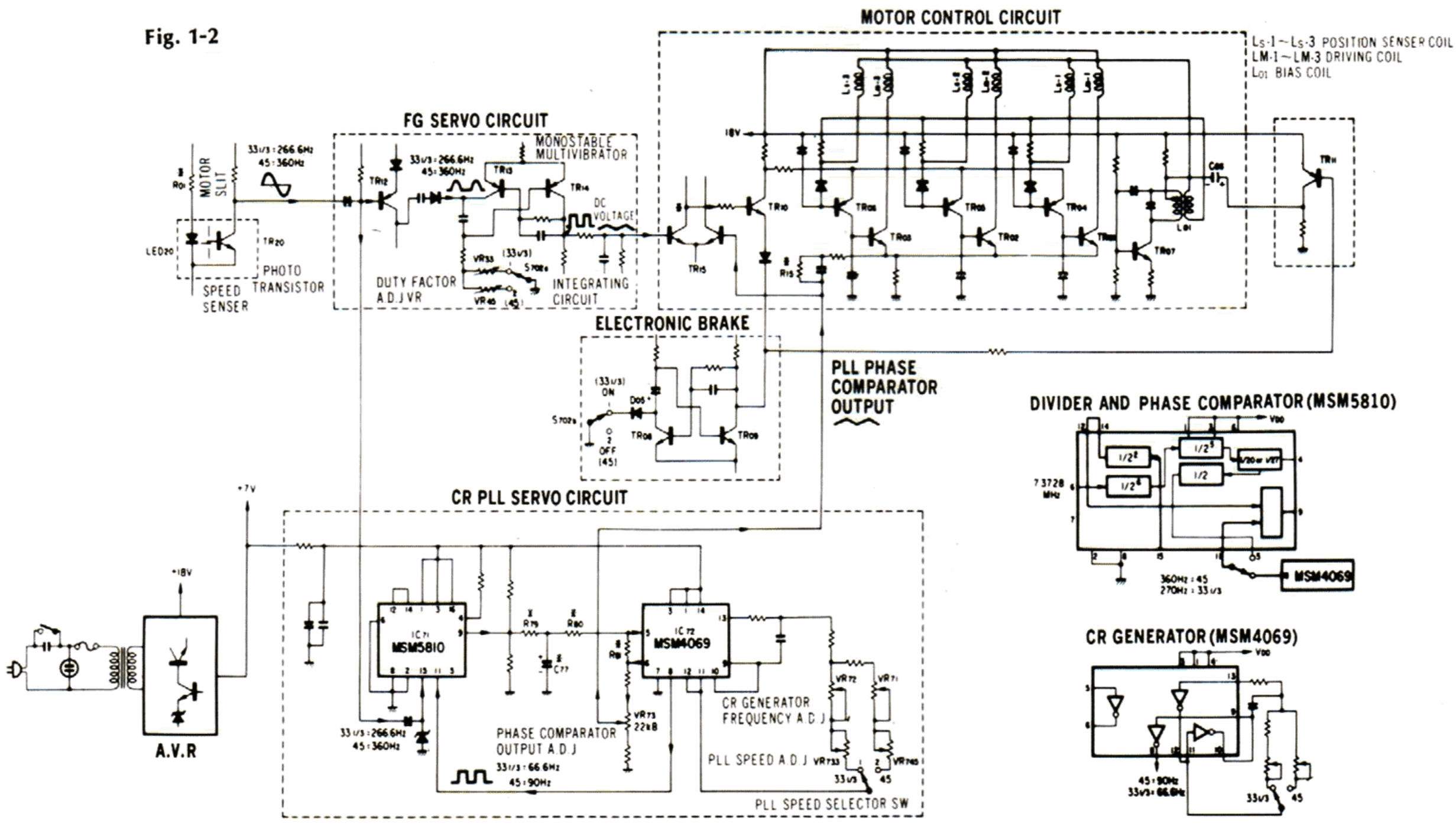

SR-737, SR-7090 Main Circuit

The electronic circuitry in this set is two servo circuits and a motor control circuit.
The servo circuit employs the PLL servo system and the speed control system (frequency-generator servo) together.

This set employs both the F-G servo system and PLL servo system by which rotation fluctuation is always locked in the reference signal.

2) SR-535/SR-5090

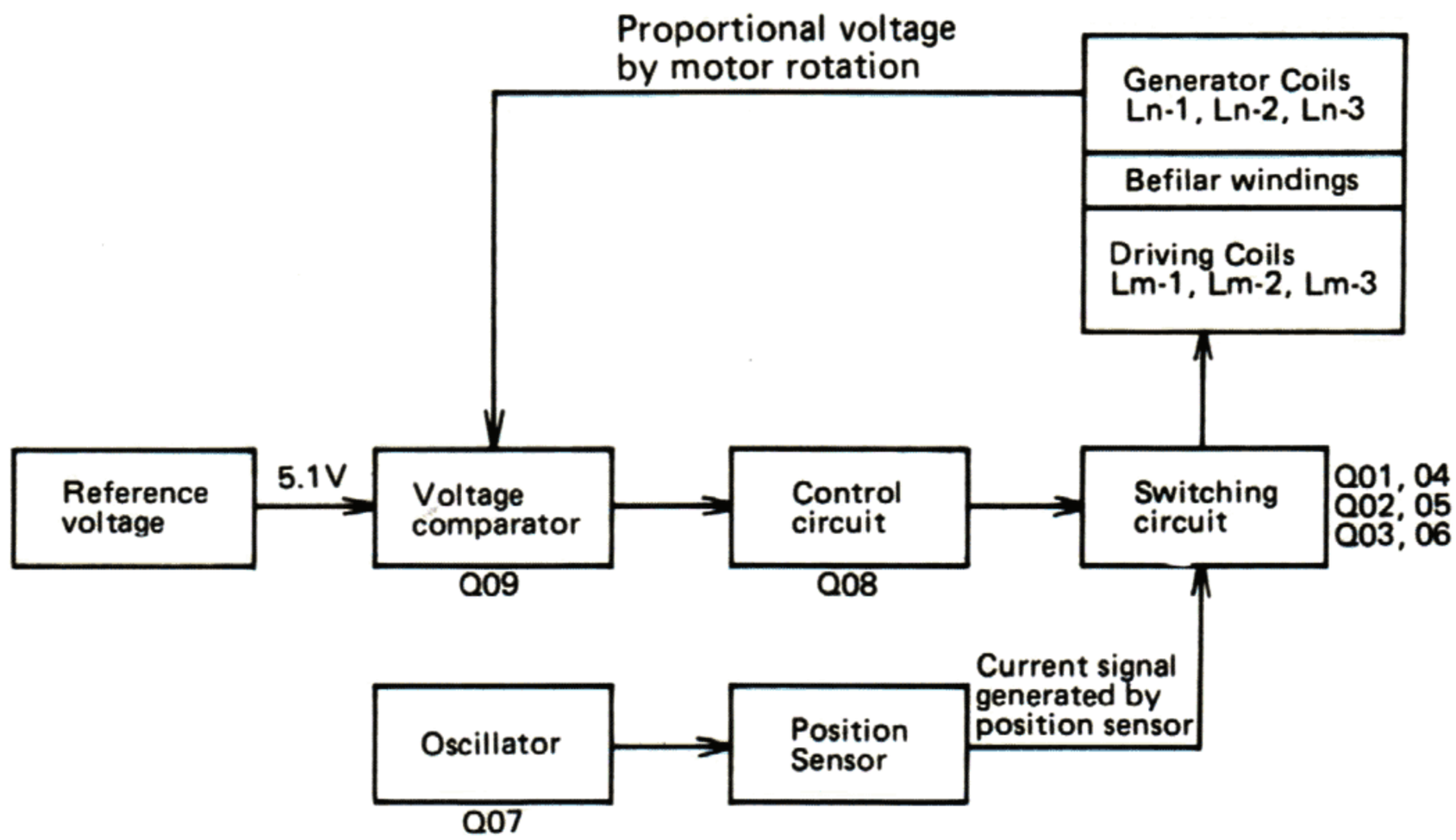

2. OPERATIONS OF ELECTRIC CIRCUIT

A.SR-535/SR-5090

D.D. Motor of this direct-drive player system is DC blushless servo motor having 20-pole on interior surface of the rotor magnet and 30 slots for winding stator coils, which ensure the performance for extremely less wow-flutter and over-load fluctuation. Namely, driving operations of this D.D. Motor connected with V.G (Voltage Generator) servo circuit board are as follows.

Generator coils, Ln-1, Ln-2 and Ln-3 oscillate voltage proportional by rotation speed of the motor. Voltage comparator compares the voltage induced by rotation speed with reference voltage, 5.1 volts, from printed circuit board, S-0015. Control circuit, Q08, restricts current of driving coils by control signal occurred in the voltage comparator, Q09.

When this current flows by turn into one of three driving coils, Lm-1, Lm-2 and Lm-3, the motor rotation speed varies to the current proportionally. And, the induced voltage of three generator coils change proportionally by changing motor rotation speed. In other words, voltage comparator compares the voltage proportional by rotation speed induced in generator coils with reference voltage, 5.1 V, as a result, control voltage appears at one of collectors of Q09. This control voltage is provided for the purpose of obtaining an accurate rotation speed of the motor free from load-fluctuation of motor revolution.

As mentioned above, the motor is blushless outer rotor motor and this outer rotor on interior surface is magnetized in order of N-S-N-S poles regularly. The induced current by the rotor-turn flows into one of driving coils. Namely, very weak high-frequency signal, 83 kHz generated by oscillator coil, L01, and capacitor, C07, adds to three position sensors. This sensor detects the turning angle of rotor, and it generates current signal corresponding to rotation angle which operates for switching circuits, Q01, Q02, Q03, Q04, Q05 & Q06, then it flows into Lm-1, Lm-2 and Lm-3 by turn, resultly, the current drives turntable (platter) to obtain an accurate normal speed rotation.

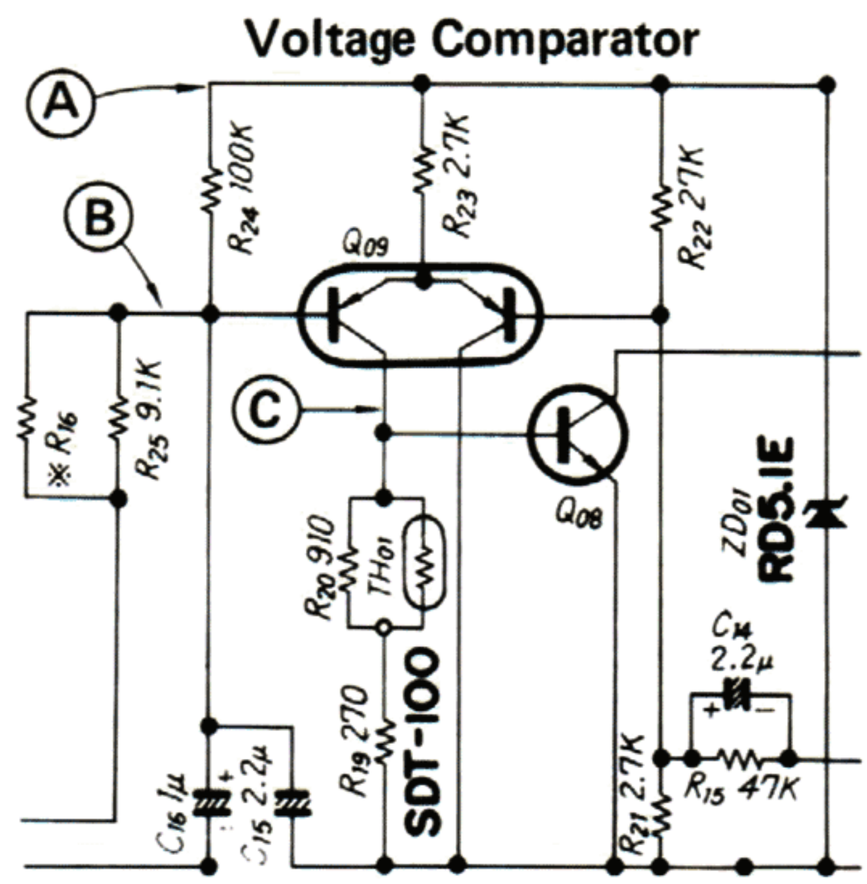

Ⓐ : Reference voltage 5.1V

Ⓑ : Proportional voltage from generator coils by rotatoin speed of motor

Ⓒ : Control voltage

B. SR-737/SR-7090

1) The Function and Operation of MSM5810 (Fig. 2-1)

CR. PLL

1. From CR generator in MSM4069, the reference signal enters into the pin No. 11 of MSM5810.
2. A signal from speed sensor is supplied to pin No. 15 and after divided into 1/2, the signal is supplied to phase comparator.
3. In quartz PLL, the revolution speed is locked by its generating frequency; however, in CR PLL, pitch is controllable by altering its generating frequency.

2) Frequency-voltage Converter Circuit (Fig. 2-2)

The frequency-voltage converter circuit is composed of a monostable multivibrator by TR13, TR14.
When trigger pulse detected by speed sensor is supplied to TR13, pulses which width are defined by time constant CR20, R22, R68, and VR33 (R22, VR45), appears at the collector of TR14 as the same number as input trigger pulses.
The volume of VR33 and VR45 are for duty factor adjustment to determine the "t", the pulse width.
With fluctuation of turntable revolution speed, the trigger pulse frequency occurred in a unit period varies.
As the width "t" of the pulse is defined by above mentioned C, R, it would not change but term "T" in which the trigger occurs, would change.
Therefore, at the output of the next stage, integrating circuit, the proportioned D.C output to the trigger pulse frequency is obtained.

- **Duty Factor**

When a pulse of width "t" is occurring in a certain term "T", t/T is so called DUTY FACTOR.

$$\text{DUTY FACTOR (D)} = \frac{\text{PULSE WIDTH (t)}}{\text{TERM (T)}}$$

Fig. 2-1

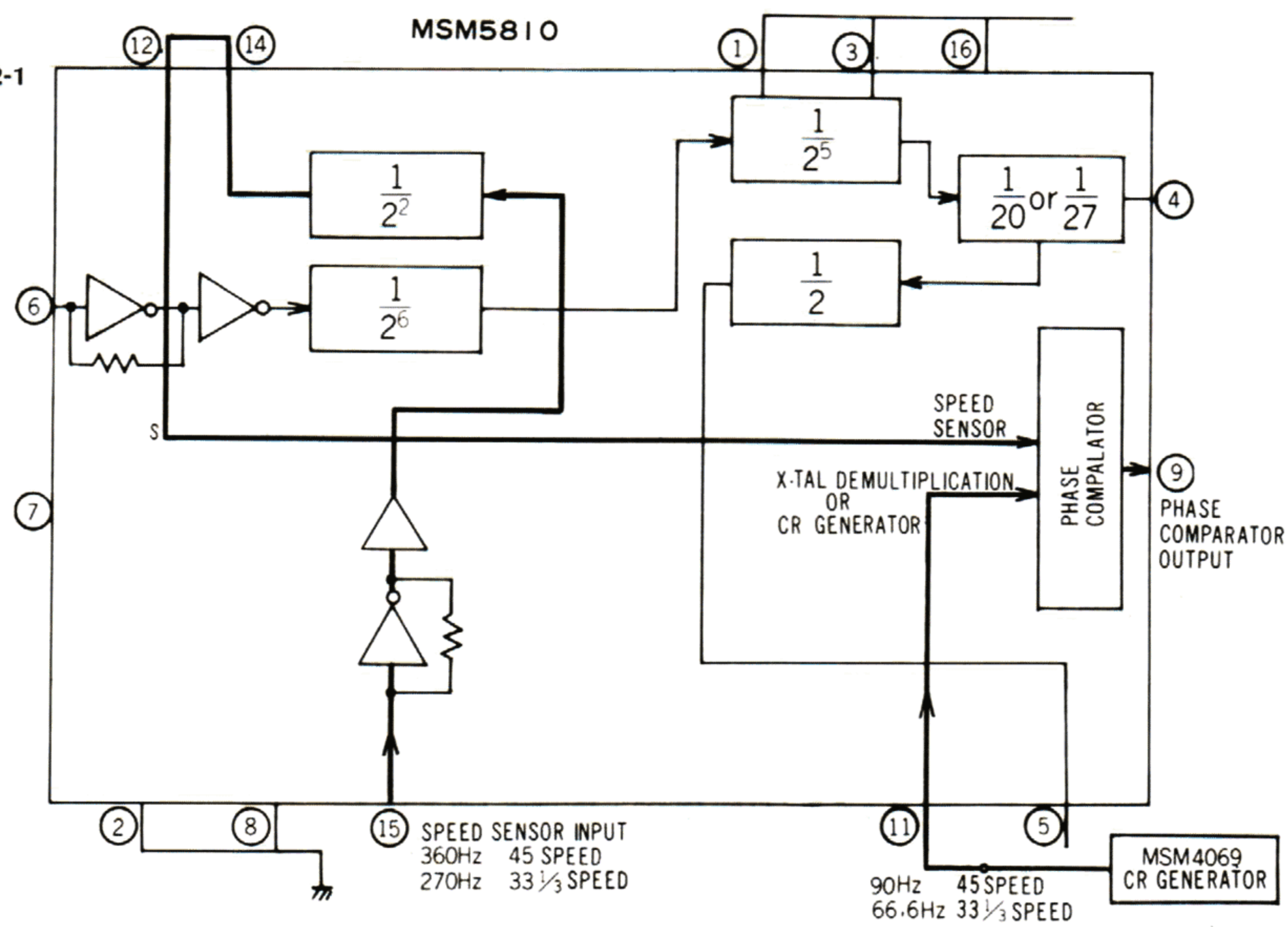

3) Electronic Brake (Fig. 2-3)

Configuration

As turntables (platters) which are employed in direct drive system players, have great inertial moment, it requires certain time to settle the rotation when shifting the revolution speed from 45 rpm to 33-1/3 rpm.
To avoid above phonemenon, this model is developed to have Electronic Brake. The torque needed for the brake is obtained by reversing the revoluting direction of motor to eliminate the capacitor C06 electrically from high frequency oscillator in the motor control circuit and by switching off the speed control transistor (TR10) to omit the servo control that the reverse revolution torque is increased.
In fact, turntable platter would not begin reverse turn because of the inertial moment and time length of braking.
The circuit to eliminate the capacitor C06 electrically and to turn off the speed control transistor is monostable multivibrator and selector switch as shown in Fig. 2-3.

Operation

A circuit including TR08 and TR09 is a monostable multivibrator and usually its operation is in stable state with TR09 being ON. When TR09 is ON, TR10 functions normally and TR11 is ON. C06 and R20 are parallelly connected and functioning to TR11. When revolution speed is shifted from 45 rpm to 33-1/3 rpm, namely S702 is switched from 2 to 1, a minus trigger is supplied to monostable multivibrator.

At the same time, plus pulse defined by R13 and C11 is generated at the collector of TR09. By this pulse, the emitter voltage of TR10 is increased so that TR10 becomes not to function as speed control and the servo system does not function.
Since this pulse is supplied to the base of TR11 simultaneously, TR11 turns off and makes C06 not function completely.
When C06 is eliminated electrically, both reverse turn and torque increase by cutting off the servo system occur at once. Consequently, the brake functions only while the pulse is generated.

Reverse Revolution

At normal revolution, the direction is defined by relation between position sensor coil and magnet, position sensor coil and driving coil, and others. One of 3 position sensor coils functions successively and individually which turns on the switching transistors connected to position sensor coil to function driving coils.
At reverse revolution, a signal wave having 90° ~ 180° of phase difference against standard wave is mixed to preceeding standard wave by eliminating C06 electrically. Then the mixed wave is supplied to switching transistors.
Above function breaks the electrical balance of position sensor coils and its function becomes opposite; therefore, the position sensor coil which is normally ON turns OFF and other coils become ON. As a result, the opposite revolution torque for brake is obtained.

Fig. 2-2

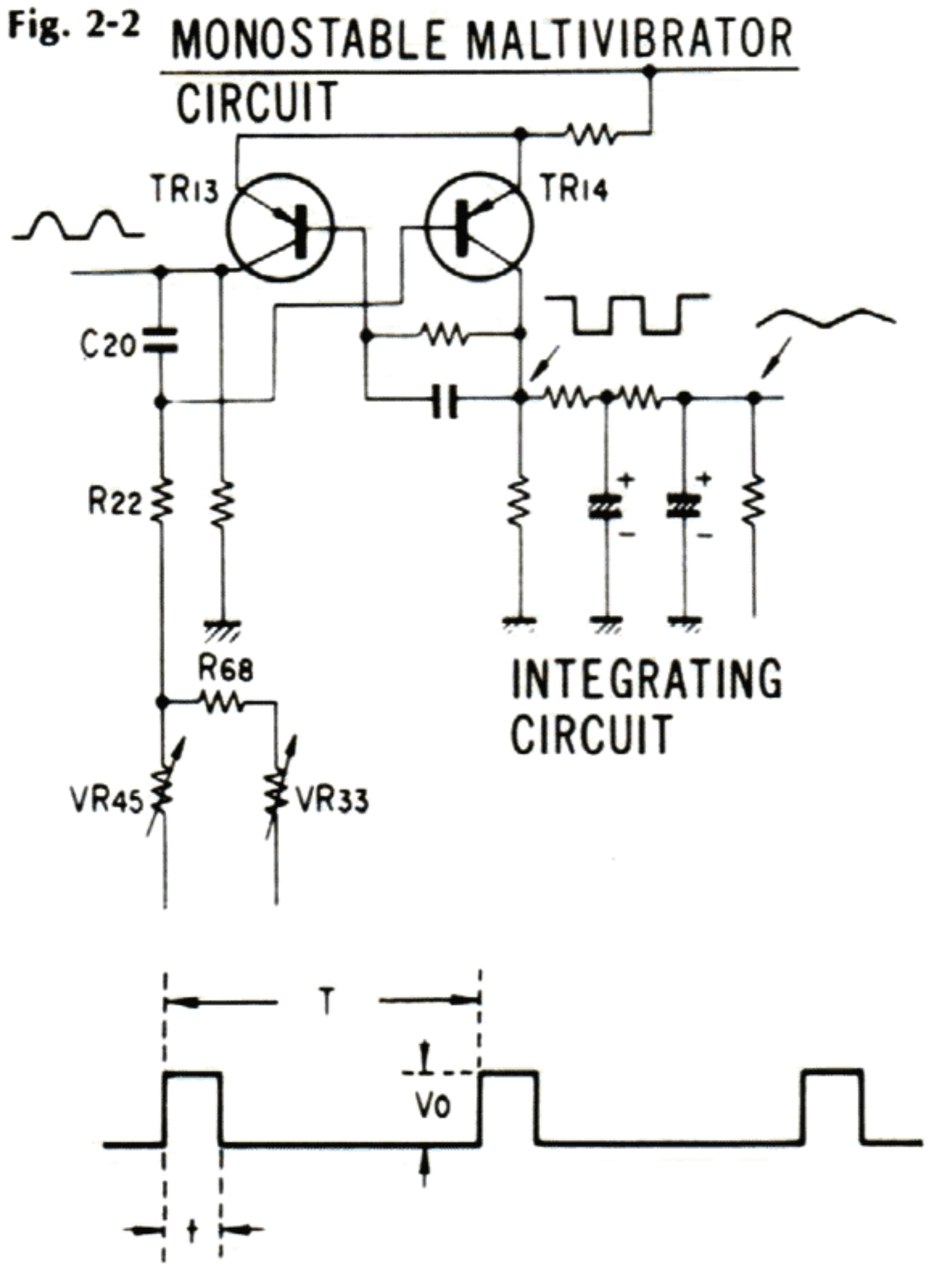

Fig. 2-3

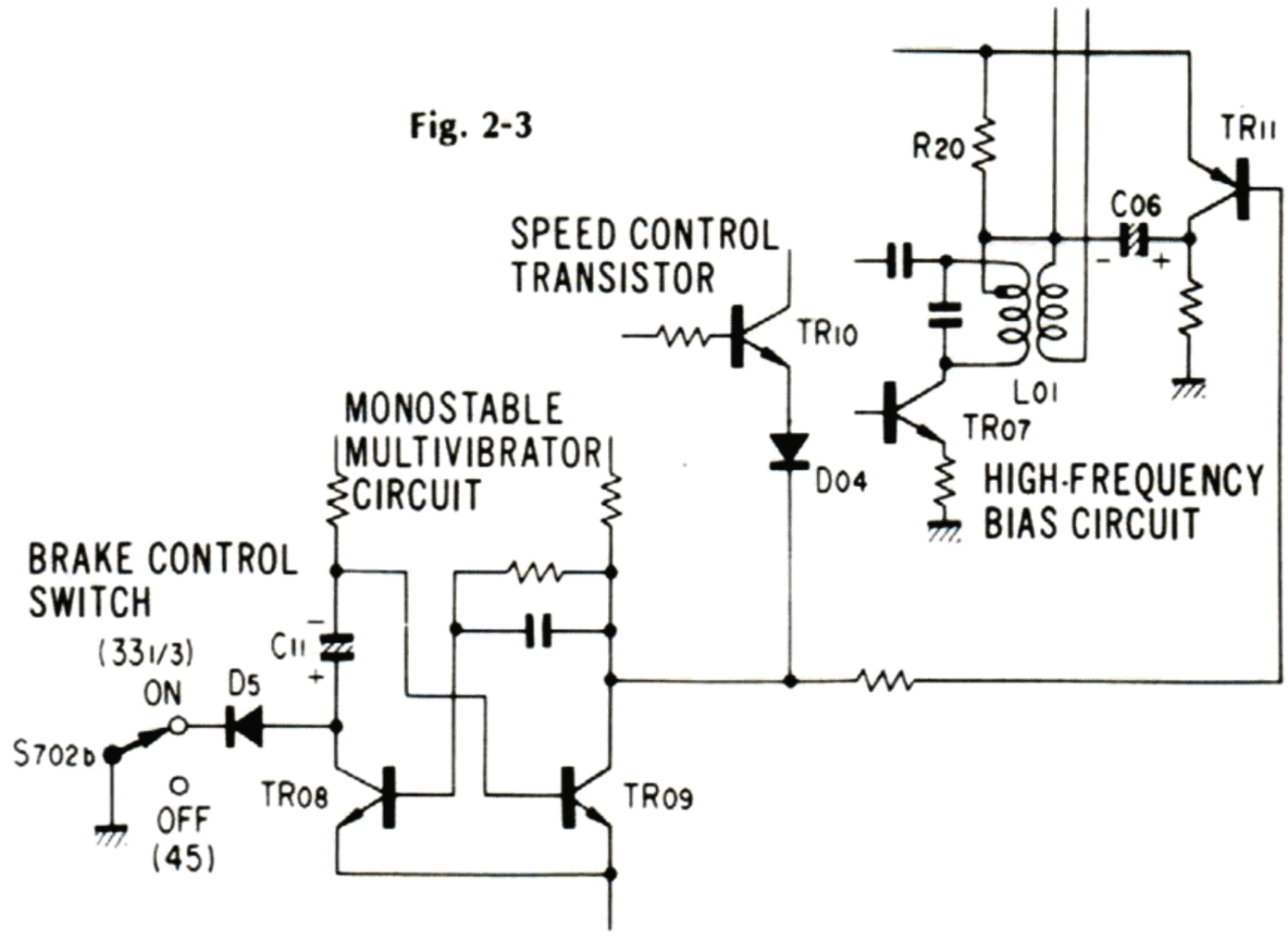

3. OPERATIONS OF AUTO MECHANISM

1) AUTO-RETURN MOVEMENT (Fig. 3-2)

After a record having been played and when the stylus proceeding to the lead-out groove, as to model SR-535/SR-5090 the L.O. adjusting plate under the tone arm pushes the sensor lever directly, and as to model SR-737/SR-7090, the L.O. adjusting plate under the tone arm passes through over the Cds sensor plate, and by this action, the sensor obtains a position detecting signal which makes sensor AMP and Plunger function, and then the sensor lever is pushed.
Movement of the crutch makes both the T.T. gear and the main gear engage each other and then the main gear rotates by one revolution.
The first half revolution of the main gear pushes the driving arm outward and also the swing disk rotates in its return direction. At this moment, two rubber rings mounted on the chucking arm end of the swing disk catch the T.A. driving board under the tone arm by the operation of a guide hole of the mechanical chassis.
As a result of this, the tone arm moves in the same direction as the swing disk and is replaced on the arm rest owing to this auto-return movement.
Just before the reverse revolution of the swing disk, the release cam (triangle shape) makes release the catching action of the T.A. driving board operated by the two rubber rings mounted on the chucking arm end of the swing disk.
Therefore, at the time of the reverse revolution of the swing disk (in the lead-in direction) depending on the second half of the main gear revolution, the controlling of the tone arm is completely released. At the same time, just before completion of the swing disk movement, the claw lever moves outwards and the claw lever hooks the auto switch lever to move the switch-fixing board, so that the power supply switch is turned off.

2) AUTO-START MOVEMENT (Fig. 3-3)

When the cuing knob is turned to the Auto-Start position, the manual check lever is pulled and also the manual cam is moved through the link rod (2), and then the start lever and the sensor lever are both pushed.
Hence, the crutch moves and engages with the T.T. gear of the rotating center shaft. Further, the pushing-out of the start lever móves the auto switch lever and makes the switch-fixing board keep apart from the driving arm to turn on the power switch, as a result, turntable (platter) begins rotating.
The first half revolution of the main gear pushes the driving arm and then the swing disk rotates in such a direction that the tone arm can return. The second half revolution of the main gear pulls the driving arm and then the swing disk rotates reversely in such a direction that the tone arm can make the lead-in movement.
At this moment, two rubber rings mounted on the chucking arm end of the swing disk catch the T.A. driving board under the tone arm by the operation of a guide hole of the mechanical chassis, and tone arm moves in the same direction as the swing disk movement.
At some point of the first half revolution of the swing disk (in the return direction), although the T.A. driving board under the tone arm has a tendency to move owing to the catching of two rubber rings mounted on the chucking arm end of the swing disk, the arm rest stops the tone arm, making only the swing disk slide.
At some point of the second half reverse revolution of the swing disk (in the lead-in direction) in the same way, the T.A. driving board under the tone arm is caught and the tone arm moves in the lead-in direction.
At the same time, the disk size selector is set by moving the S.S. arm with the peripheral part of the swing disk.
When the L.I. adjusting board fixed on the T.A. driving board under the tone arm hits against this disk size selector, the lead-in movement of the tone arm is stopped.
After that, two rubber rings mounted on the chucking arm end of swing disk continue to catch the T.A. driving board, and swing disk slides while turning. At some point of time, the two rubber rings mounted on the chucking arm end release the T.A. driving board under the tone arm by the operation of guide hole of the mechanical chassis.
When the movement of the swing disk is completed, the groove of the swing disk makes the lifter go down, and then the stylus is carried up to the lead-in groove position of the record, finishing the Auto Start Movement.

3) REPEAT MOVEMENT (Fig. 3-4)

By indicating a repeat number by the use of the repeat knob, the repeat cam is set and also link lever pulls the release cam (triangle shape) by a spring usually.
Owing to that, this release cam is hid under the mechanical chassis and does not jut out from the guide hole part of the mechanical chassis, even after the tone arm having automatically returned, the movement of catching the T.A. driving board is continued and then the auto lead-in motion of the tone arm is made continuously by the timing of the mechanical chassis guide hole.
Also, during this lead-in motion, by the second half revolution of the main gear, the groove of the main gear moves the release lever, pulling the feeding levers, and turns back the repeat cam and also the repeat knob is returned one step of repeat number indicate.
Therefore, when the repeat action of a repeat number indicated on the repeat knob is completed, the repeat knob returns back at the position OFF, and the auto-return movement, afterward, makes the same as the above-mentioned auto-return movement, and the power supply is turned off automatically after the tone arm having auto-returned.
When an auto-cut is required during the repeat movement, to set the repeat knob to the position OFF makes the repeat movement release.

4) AUTO-CUT MOVEMENT

When a record is required to stop playing, turn the cuing knob to the position AUTO-CUT.
The manual check lever is pulled and the manual cam is also pulled by the link rod (2), pushing the start lever and the sensor lever, and then the above-mentioned auto-return movement is made. (In this case, the repeat knob is required to set at the position OFF).

5) OPERATION DIAGRAM OF AUTO MECHANISM

Part Names of Auto Mechanism

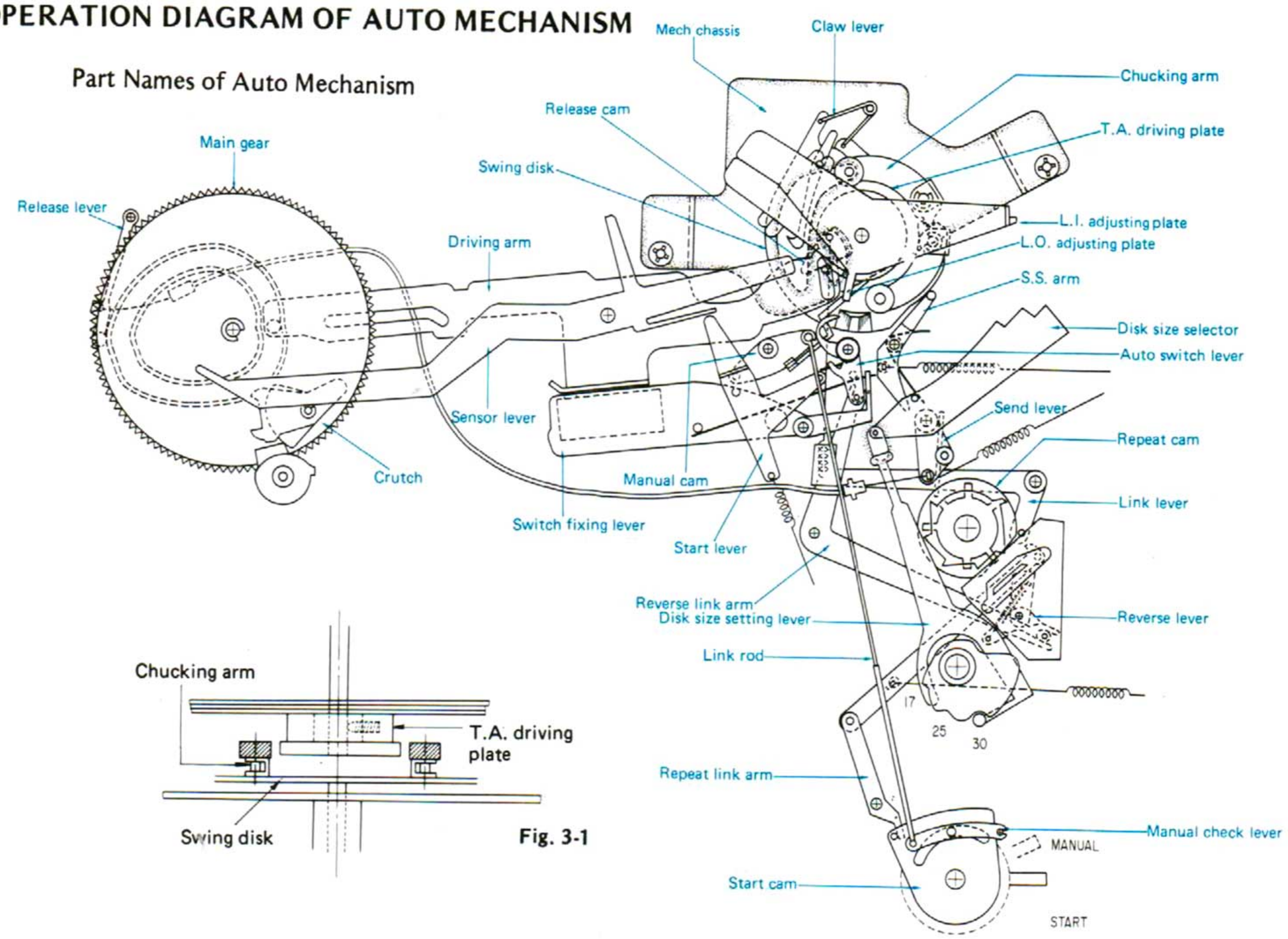

Fig. 3-1

- **AUTO-RETURN MOVEMENT**

Operation of a guide hole of mech chassis

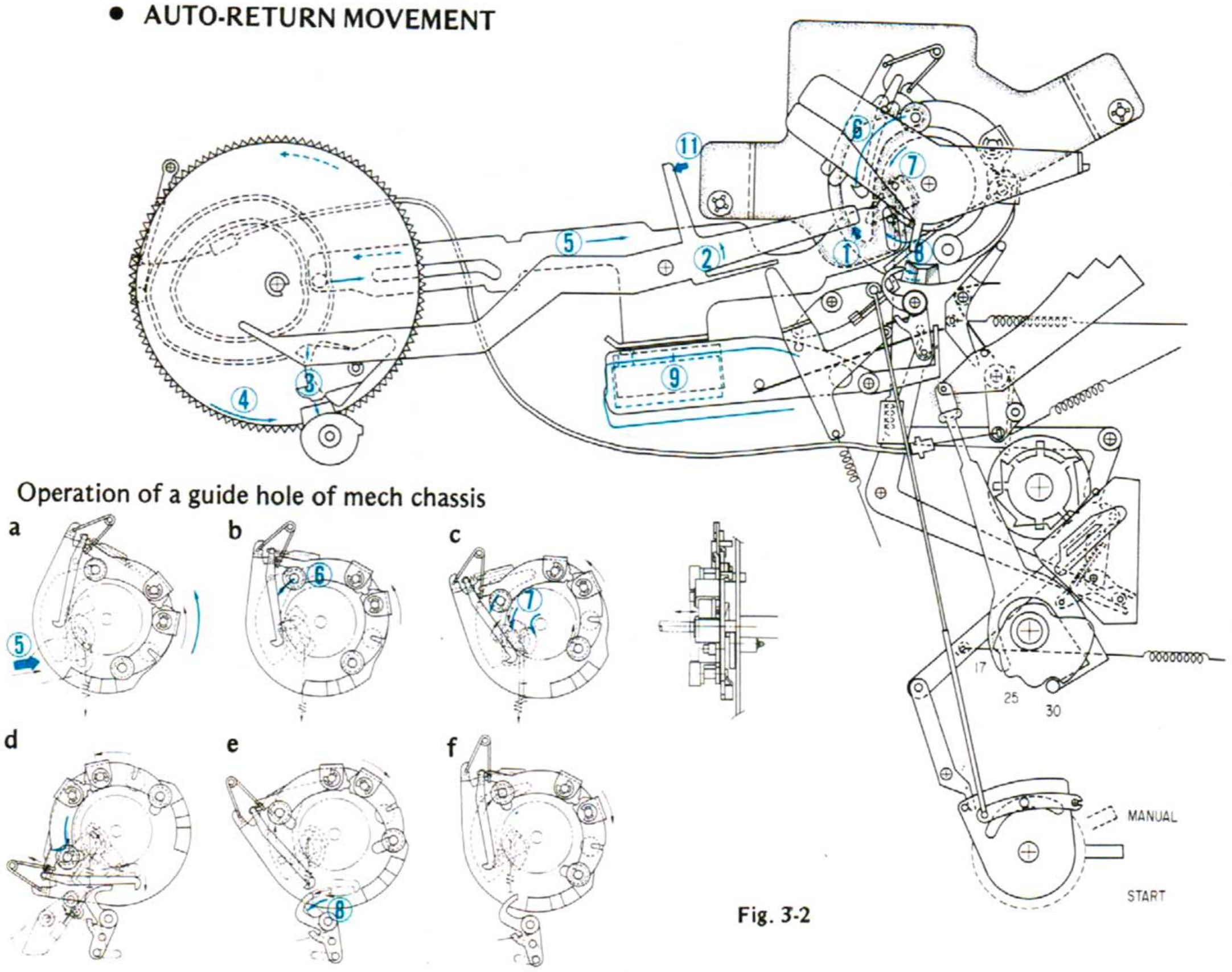

Fig. 3-2

• AUTO-START MOVEMENT

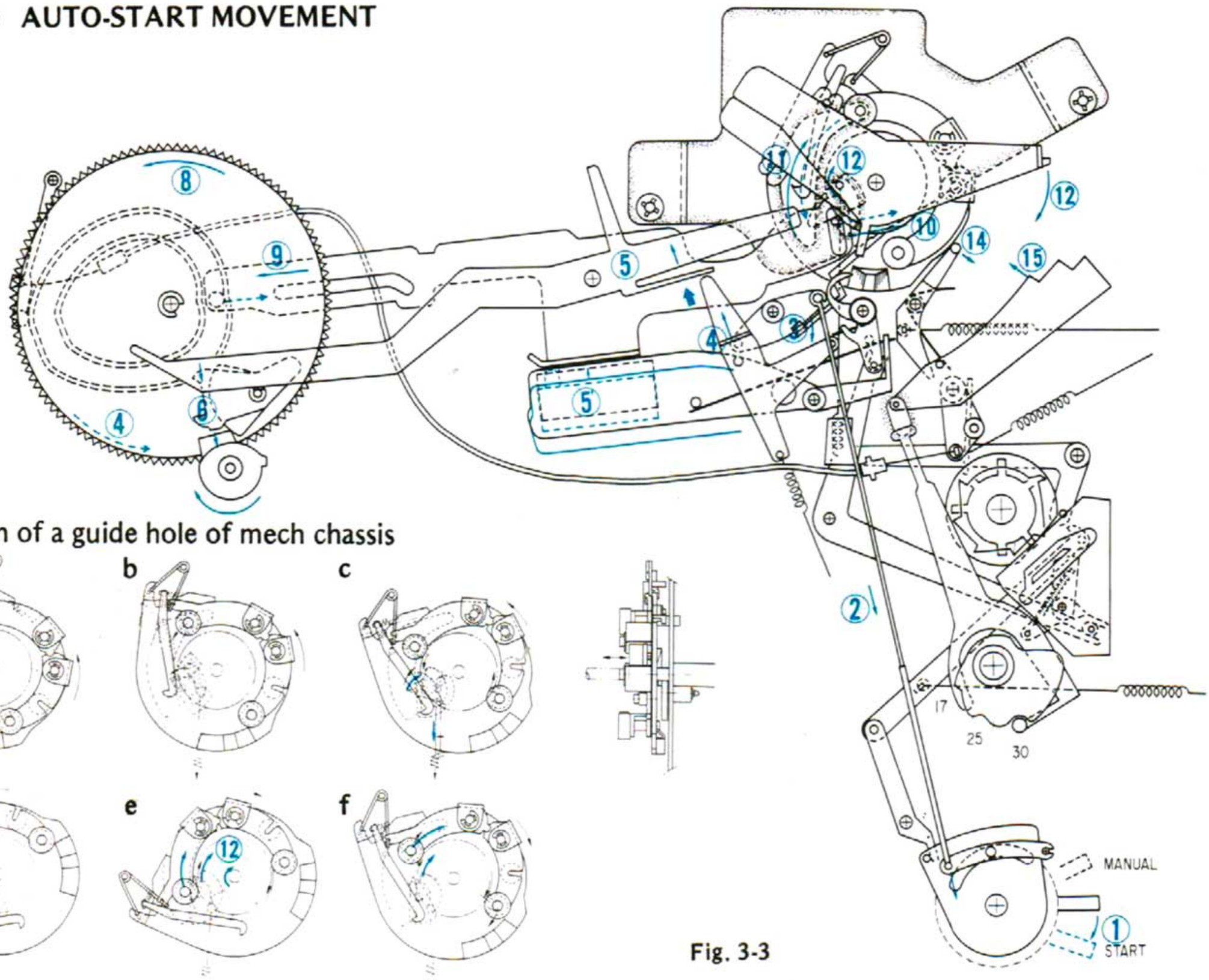

Operation of a guide hole of mech chassis

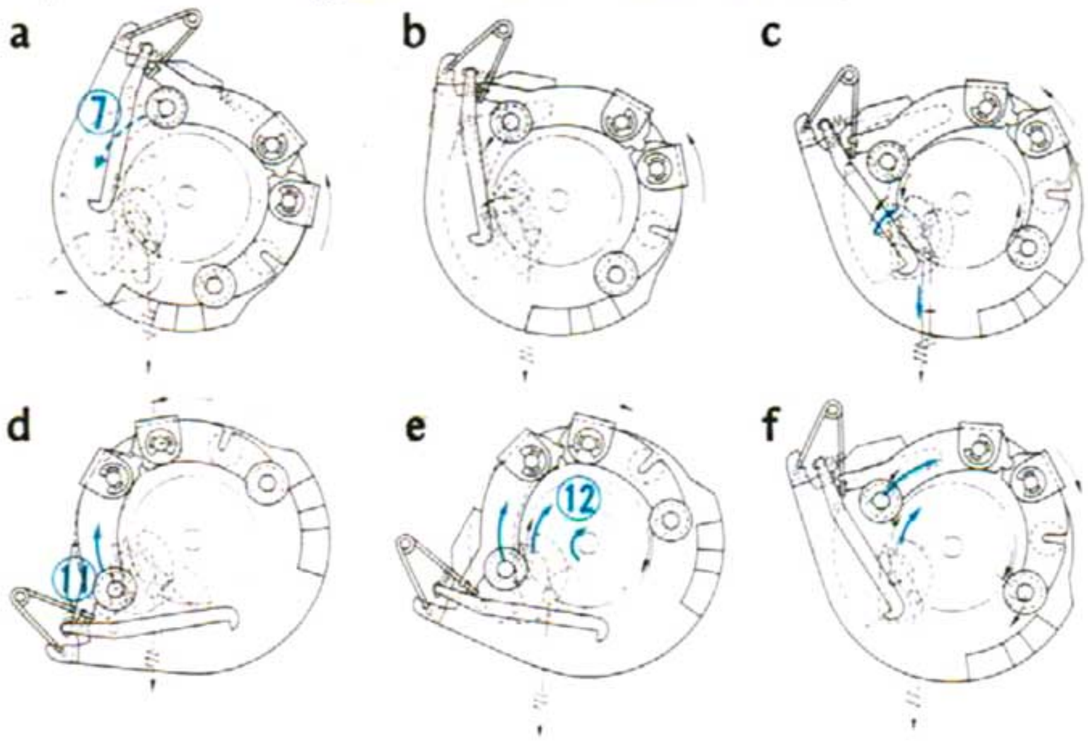

Fig. 3-3

• REPEAT MOVEMENT

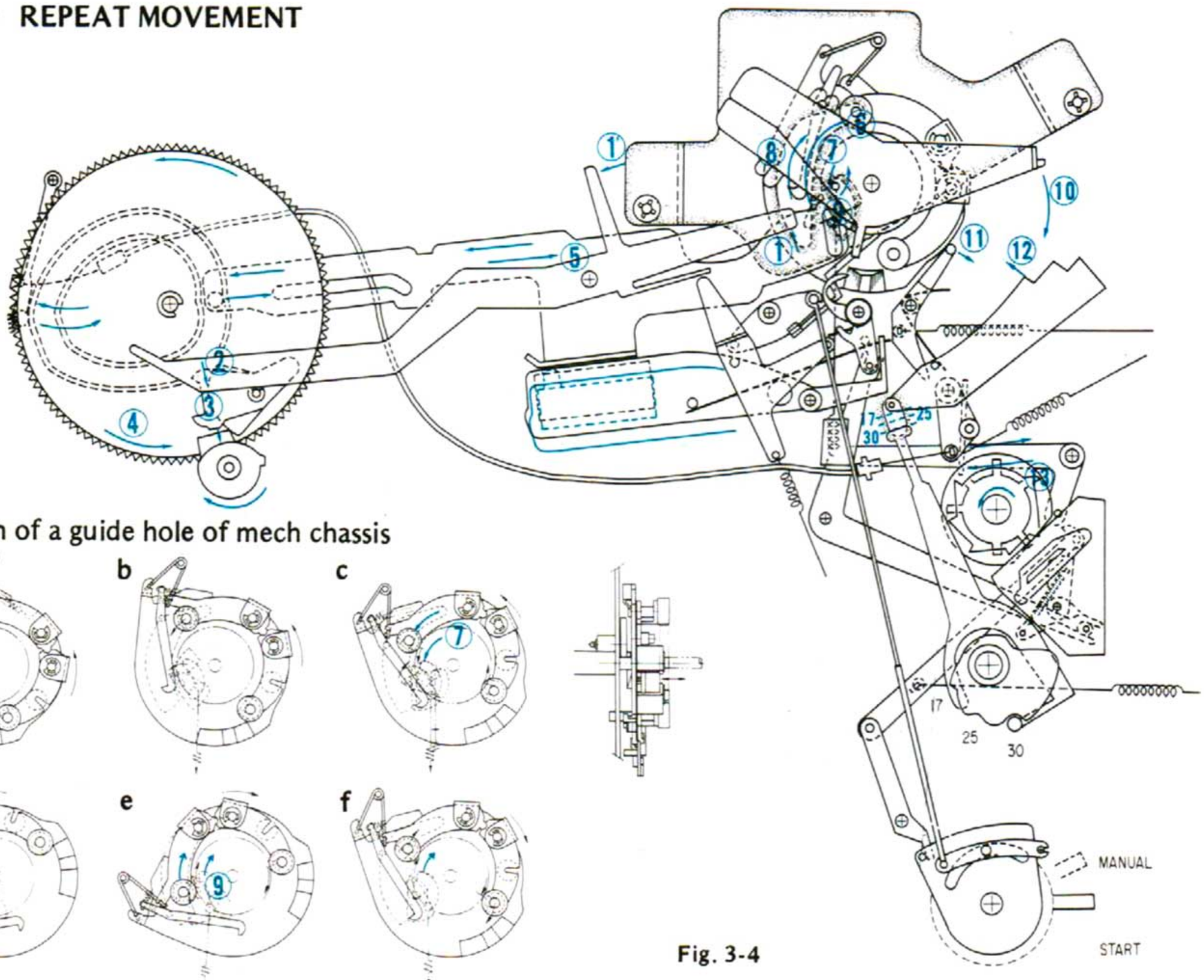

Operation of a guide hole of mech chassis

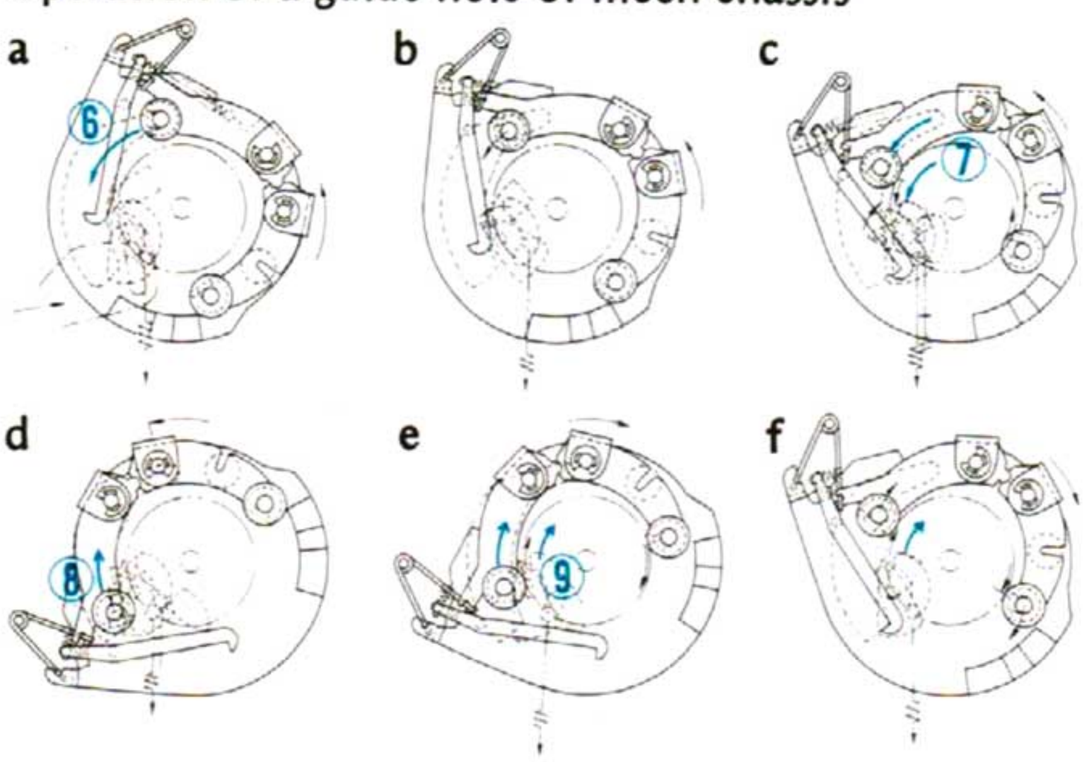

Fig. 3-4

4. MAIN PARTS REPLACEMENT

1) Replacement of Main Chassis Ass'y. (See Bottom View on page 7)

1. Extract the knobs of Repeat and Size Selector.
2. Remove 15 pcs. of screws No. 34 .
3. Take the Bottom Plate off.
4. Remove 3 pcs. of screws No. 13 ,one pc. of screw No. 39 and No. 40 .
5. Take off the shield plate over the Circuit Board, S-0012.
6. Disconnect the lead wires soldered on the Circuit Board, S-0012.
7. Disconnect the lead wires soldered on the Circuit Board, S-0020 from the Circuit Boards, S-0018 & S-0019.
8. Pluck out the connectors of each Circuit Board on chassis.
9. Remove 6 pcs. of Nuts No. 36 .

2) Replacement of Tone arm Ass'y (See Exploded View on page 10)

1. Take out chassis (See Replacement 1).
2. Loosen the Hex screw No. 43 with T.A. driving Board.
3. Remove 4 pcs. of screws No. 50 .
4. Take off the Tone arm base Ass'y (SR-737/SR-7090 only).
5. Loosen the screw No. 52 . (SR-737/SR-7090 only).
6. Take off the Light Screening Plate No. 53 . (SR-737/SR-7090 only).
7. Loosen the Hex screw No. 54 .
8. Pull the Tone arm Ass'y upward.

3) Installation of T.A. driving Board Ass'y. (See Exploded View on page 10)

1. Put the Tone arm on the Arm rest.
2. Fix the T.A. driving Board Ass'y as Fig. 4-1, 4-2.
3. Confirm that the Tone arm moves smoothly.

4) Installation of Light Screening Plate. (See Exploded View on page 10)

1. Put the Tone arm on the Arm rest.
2. Fix the Light Screening Plate as Fig. 4-3, 4-4.
3. Confirm that the Tone arm moves smoothly.

5) Installation of Cueing knob Ass'y. (See Exploded View on page 10)

1. Set the Cueing Cam to OFF position as Fig. 4-5.
2. Set the Connection Pin No. 13 to Cueing Cam.
3. Set the Cueing Knob No. 4 to Mark ▭ position on panel.

6) Installation of Insulators (See Bottom View on page 7)

Since pressure on each insulator differs at each corner, the springs are distinguished.

Fig. 4-1

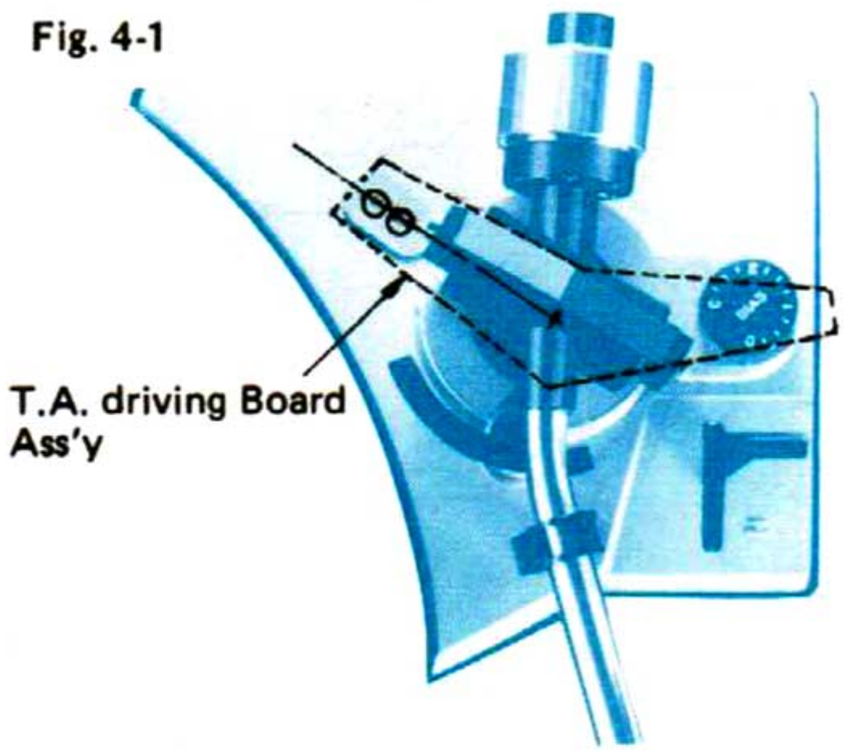

Fig. 4-2

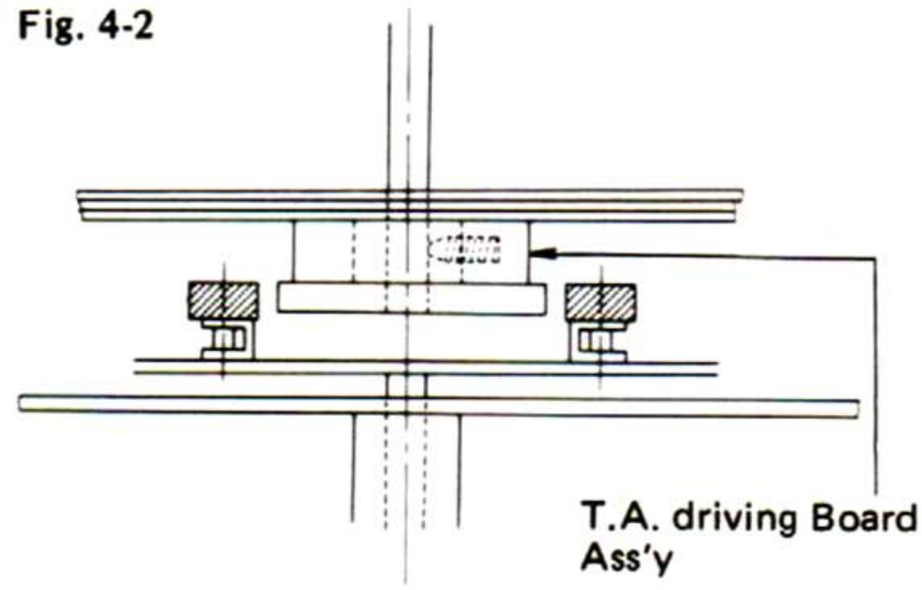

Fig. 4-3

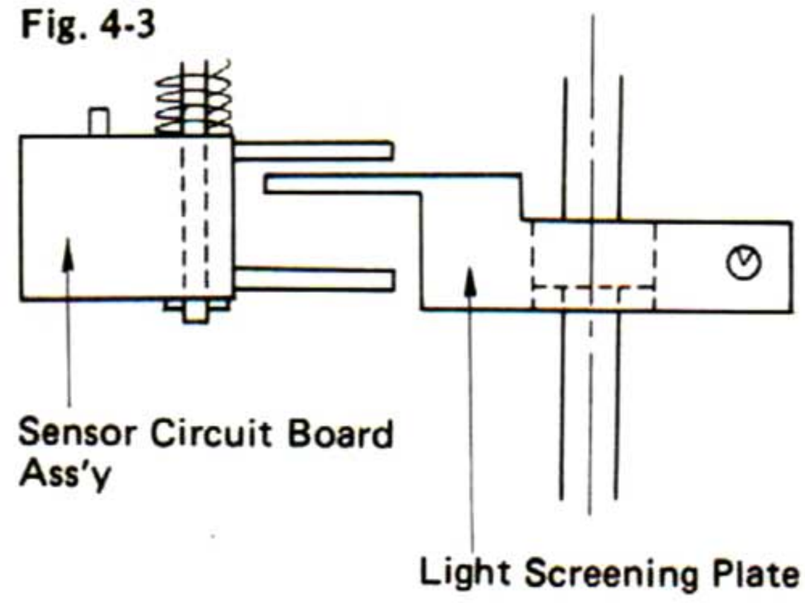

Fig. 4-4

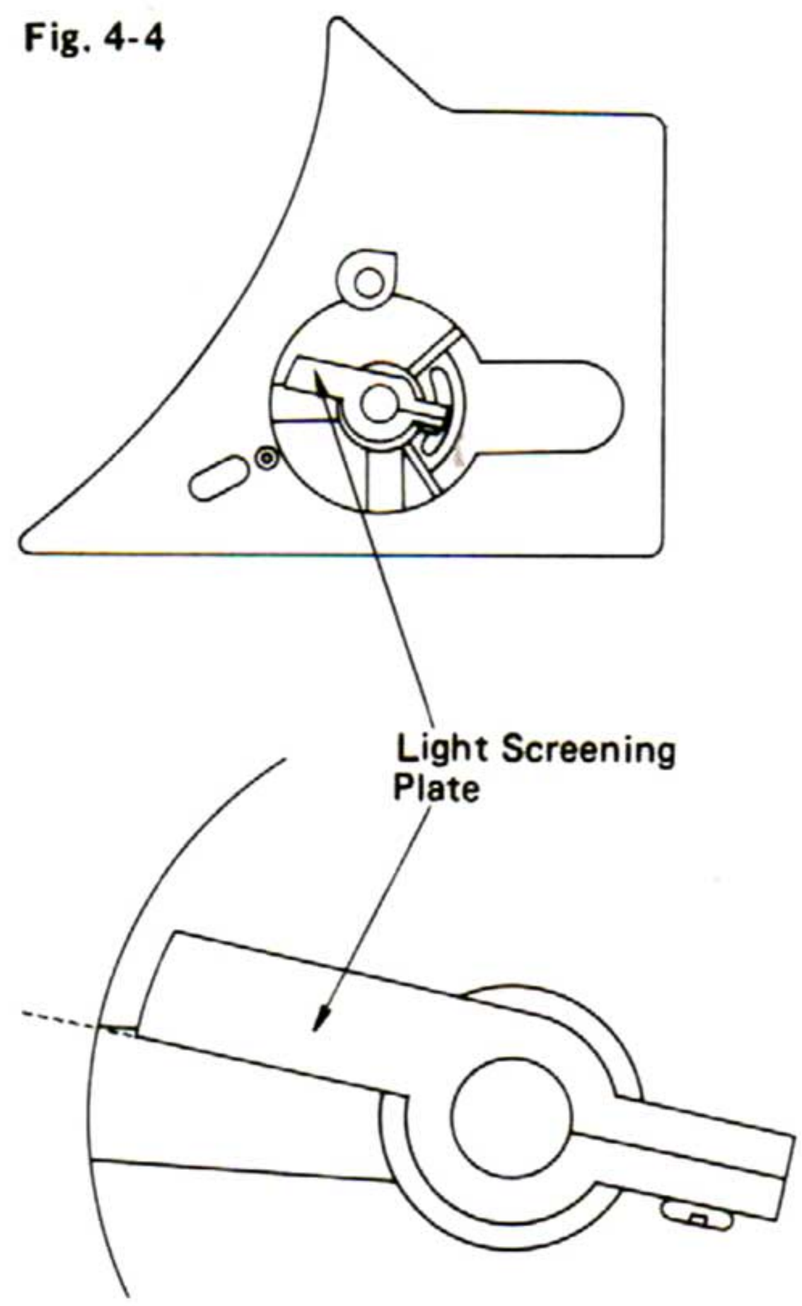

Fig. 4-5

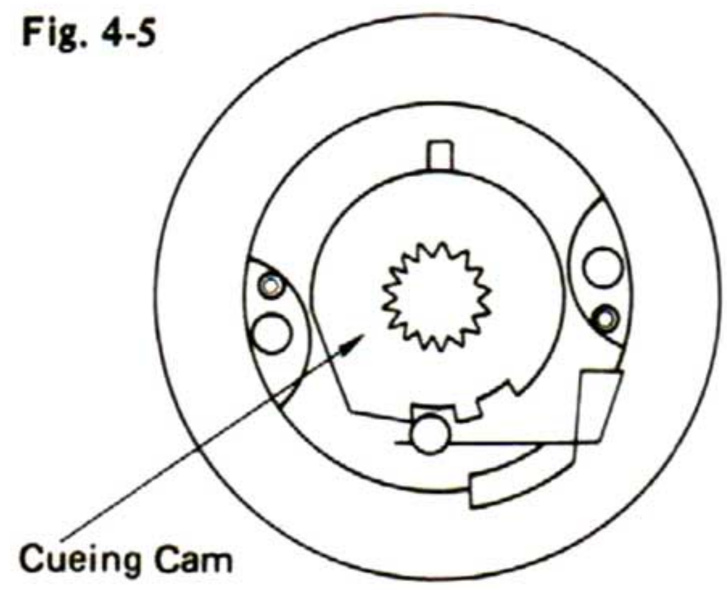

5. MECHANISM PARTS LOCATION AND PARTS LIST

1) Bottom View

SR-535/SR-5090

SR-737/SR-7090

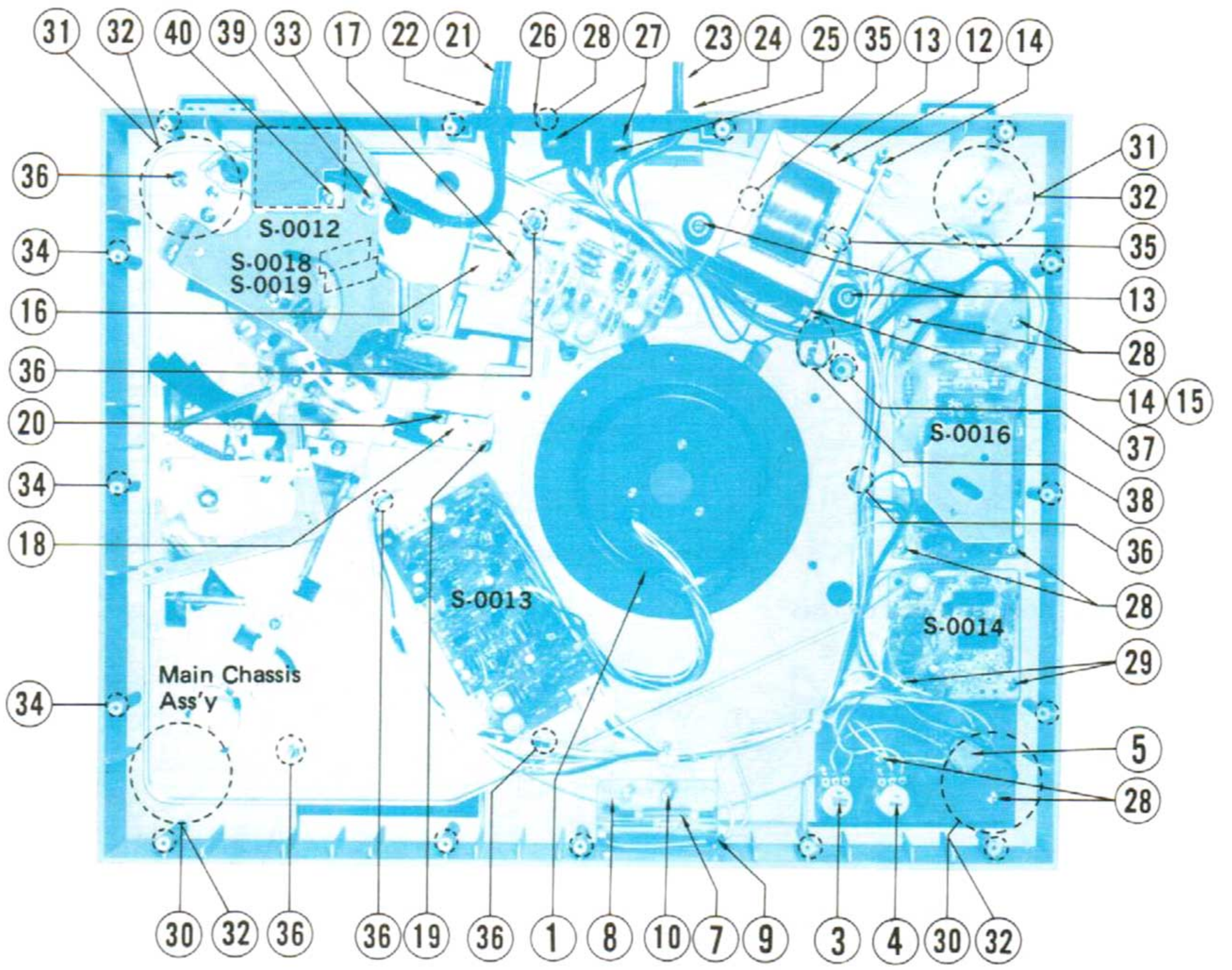

With units sold in U.S.A., Canada and certain European countries, no cartridge is provided.

Parts List (Bottom View)

Parts No.		Stock No.	Description
1		4320480	D.D Motor (SR-535, SR-5090)
		4320500	D.D Motor (SR-737, SR-7090)
2	VR733, 745	1005330	Volume 2 kΩ B Pitch Control (SR-535, SR-5090)
3	VR733	1005111	Volume 50 kΩ B Pitch Control (33 rpm) (SR-737, SR-7090)
4	VR745	1005380	Volume 40 kΩ B Pitch Control (45 rpm) (SR-737, SR-7090)
5	S 702	1101830	Speed Selector Switch EU, BS (SR-535, SR-737)
		1101870	Speed Selector Switch XX, CSA, UL (SR-535, SR-737)
		1101790	Speed Selector Switch (SR-5090, SR-7090)
6	NL701	0410130	Neon Lamp NE-2HUWSA-5 (SR-535, SR-5090)
7	NL701	0410140	Neon Lamp NE-2HUWSA-6 (SR-737, SR-7090)
8		5262290	Lamp Holder
9		5502841	Stopper Rubber
10		5109122	BT Type Screw M3 x 8
11	PT 01	4002690	Power Transformer XX (SR-535, SR-5090)
		4002692	Power Transformer CSA, UL (SR-535)
		4002694	Power Transformer EU, BS (SR-535)
12	PT 01	4002700	Power Transformer XX (SR-7090) (SR-737)
		4002702	Power Transformer CSA, UL (SR-737)
		4002704	Power Transformer EU, BS (SR-737)
13		5502650	Flowting Rubber, transformer
		5162540	S Type Screw
14		5101862	BSA Type Screw M4 x 8
15		5122560	TLE Type Washer 4φ
16	SL 701	4340170	Preasure Magnet (SR-737, SR-7090 only)
17		5109122	BT Type Screw M3 x 8 (SR-737, SR-7090 only)
18	S 701	1160250	Micro Switch
19		5162720	PSA Type Screw M3 x 16
20		5103545	PT Type Screw M3 x 16
		3810290	P.U Output Cord EU, CSA, BS (SR-5090, SR-7090)
21		3810310	P.U Output Cord XX, UL (SR-535, SR-737)
22		3910570	Strain Relief (8.2φ), output cord
23		3800420	Power Cord XX, CSA, UL
		3800421	Power Cord EU
24		3910600	Strain Relief (5.2φ), power cord XX, CSA, UL
25		1190510	Voltage Selector XX (SR-5090, SR-7090) (SR-535, SR-737)
		1190520	Voltage Selector EU, BS (SR-535, SR-737)
26		5109222	BT Type Screw M3 x 8 (black)
27		5103543	PT Type Screw M3 x 10
28		5162700	BT Type Screw M3 x 10
29		5109122	BT Type Screw M3 x 8
30		7072090	Insulator (I)
31		7072100	Insulator (J)
32		5107764	PSB Type Screw M4 x 12
33		5616290	Cord Bushing (SR-737, SR-7090)
34		5162570	WT Type Screw M3 x 14, bottom plate
35		5107764	PSB Type Screw M4 x 12, shipping screws
36		5110261	H Type Nut M4 x 3.2
		5121360	S Type Washer 4φ
		5120161	P Type Washer 4φ
37		5182361	H Type Nut M4 x 3.2
		5121360	S Type Washer 4φ
		5182361	P Type Washer 4.5φ
38		5162700	BT Type Screw M3 x 10
39		5162700	BT Type Screw M3 x 10
40		5103543	PT Type Screw M3 x 10

2) Top View

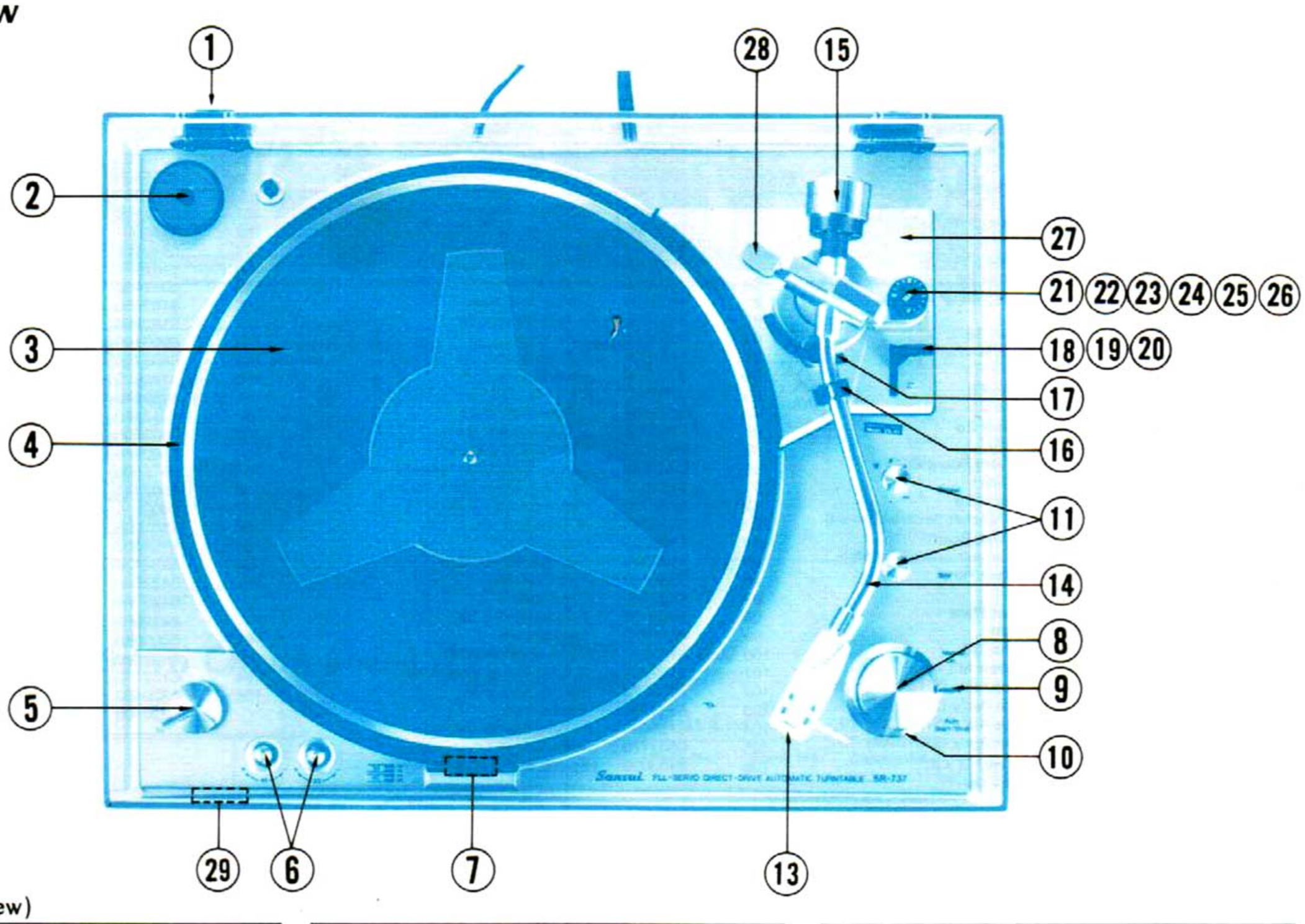

Parts List (Top View)

Parts No.	Stock No.	Description
1	7012161	Dust Cover Ass'y
	5062342	Dust Cover
	6922330	Auto Hinge
	6922340	Auto Hinge Plate
	5502711	Rubber Cushion
	5101163	B Type Screw M4 x 10
2	6172040	45 Adaptor
3	5502901	Rubber Mat, turntable XX, UL (SR-5090, SR-7090) (SR-535, SR-737)
	5502891	Rubber Mat, turntable EU, CSA, BS (SR-535, SR-737)
4	6112183	Turntable (Platter) (SR-535, SR-5090)
	6112191	Turntable (Platter) (SR-737, SR-7090)
5	5312310	Knob, speed selector
6	4312280	Knob, pitch control
7	5442030	Illuminator
8	5312320	Knob, cueing (1)
9	5312360	Knob, cueing (2)
10	6502870	Knob, cueing (3)
11	531239	Knob, repeat & Record size
12	6642270	Head Shell (SR-535, SR-5090)
	6642280	Head Shell (SR-737, SR-7090)
13	4310370	Cartridge Ass'y (SC-50) (with stylus, stylus cover, screw ass'y) (SR-535, SR-5090) XX, AS only
	4940230	Stylus (SN-50) (SR-535, SR-5090) XX, AS only
	5012090	Stylus Cover
	5192160	Screw Ass'y
	4310340	Cartridge Ass'y (SV-43) (with stylus, stylus cover, screw ass'y) (SR-737 SR-7090) XX, AS only
	4940220	Stylus (SN-43)
	5012080	Stylus Cover
	5192180	Screw Ass'y
14	7092670	Tonearm (without main weight) (SR-535, SR-5090)
	7092680	Tonearm (without main weight) (SR-737, SR-7090)
15	6912570	Main Weight
16	6622260	Arm Rest Ass'y (with screw)
17	7082300	Tonearm Guide Ass'y (with SS Type Setscrew)
	5105520	SS Type Setscrew M2.6 x 3, tonearm guide
18	7052410	Lifter Lever Ass'y (with SS Type Setscrew)
	5105502	SS Type Setscrew M2 x 3, Lifter Lever
19	6012510	Lifter Cam Ass'y (with P Type Washer)
20	7012170	Lifter Cam Plate Ass'y (with screw or washers)
	5103304	P Type Screw M2 x 6, lifter cam plate
21	7102090	I.F.C. Knob Ass'y (with SS Type Setscrew)
	5105521	SS Type Setscrew M2.6 x 4, I.F.C. knob
22	6903370	Click Spring Ass'y (with steel boll 2φ)
23	6903360	Cushion Spring
24	6012520	Canceller Cam
25	7052420	Canceller Lever Ass'y (with E Type Washer 1.5φ)
	5151001	E Type Washer 1.5φ, canceller lever
26	6903380	Canceller Spring
27	7092690	Tonearm Base Ass'y (with lifter) (SR-535)
	7092770	Tonearm Base Ass'y (with lifter) (SR-5090)
	7092700	Tonearm Base Ass'y (with lifter) (SR-737)
	7092780	Tonearm Base Ass'y (with lifter) (SR-7090)
28	5052130	Cap, adjust
29	5332091	Sansui Badge

There is no cartridge provided for some XX model.

3) Exploded View

Parts List <Exploded View>

Parts No.	Stock No.	Description	Position
1	5312310	Speed Selector Knob	
2	5312390	Repeat & Record Size Knob	
	7102100	Cueing Knob Ass'y (with 3, 4, 6 ~ 12)	
3	5312320	Cueing Knob (1)	
4	5312361	Cueing Knob (2)	
5	5109122	BT Type Screw M3 x 8	
6	6502870	Cueing Knob (3)	
7	5182970	CS Type Washer 8φ	
8	5232450	P Type Felt Washer (2) 10.2φ	
9	5183040	P Type Nylon Washer 10.2φ	
10	6903170	Board Spring	
11	6322010	Steel Ball (4)	
12	6012391	Cueing Cam	
13	5192090	Connection Pin	
14	5107867	PSA Type Screw M4 x 18	
15	5232470	Chassis Hold Washer 4φ	
16	5312280	Pitch-Control Knob	
17	5332091	Sansui Mark	
18	5110261	H Type Nut M4 x 3.2	
19	5121360	S Type Washer 4φ	
20	5120161	P Type Washer 4φ	
21	5182361	P Type Washer M4.5 x 18	
22	5162700	BT Type Screw M3 x 10	
23	6903270	Spring, pu cord	
24	5103543	PT Type Screw M3 x 10	
25	5032060	Shield Plate	
26	5162700	BT Type Screw M3 x 10	
27	3910160	Nylon Cord Stopper	
28	2593661	S-0012 Printed Board for connections	
29	3810290	PU Output Cord EU, CSA, BS (SR-5090, SR-7090)	SR-535, SR-737)
	3810310	PU Output Cord UL, XX	
30	5101862	BSA Type Screw M4 x 8	
	7142100	Mechanical Chassis Ass'y (with 31 ~ 41)	
31	5202181	Mechanical Chassis	
32	5151004	E Type Washer 3φ	
33	6903101	Spring, chucking arm	
34	6502840	Claw Lever	
	6903231	Spring (7), claw	
	5183000	CS Type Washer 2φ	
	5183030	P Type Thrust Washer 2.5φ	
35	6592070	Swing Disk	
36	5151004	E Type Washer 3φ	
	5182570	P Type Thrust Washer 4.0φ	
37	6592051	Chucking Arm (1)	
38	6592060	Chucking Arm (2)	
39	5502760	Arm Rubber	
40	5183000	CS Type Washer 2φ	
41	6012430	Release Cam	
	7062330	Tonearm Driving Board Ass'y (with 42 ~ 49)	
42	5151005	C Type Washer 10φ	
43	5106061	SF Type Hex Socket Setscrew M4 x 6	
44	6912403	Tonearm Driving Board	
45	6903241	Spring (8), lead-out orin adjust plate	
46	6502880	Lead-out Adjust Plate	
47	6502901	Cam Holder	
48	6502891	Lead-in Adjust Plate	
49	6012462	Adjusting Cam	
	5182980	W Type Washer 3φ	
50	5101944	BSB Type Screw M3 x 8	
51	7092690	Tonearm Base Ass'y (SR-535)	with 54, 69, 70
	7092770	Tonearm Base Ass'y (SR-5090)	
	7092700	Tonearm Base Ass'y (SR-737)	
	7092780	Tonearm Base Ass'y (SR-7090)	
52	5109122	BT Type Screw M3 x 8 (SR-737, 7090 only)	
53	5042090	Light Screening Plate (SR-737, 7090 only)	
54	5106143	SC Type Hex Socket Setscrew M3 x 6	
55	7092670	Tonearm (SR-535, SR-5090)	
	7092680	Tonearm (SR-737, SR-7090)	
56	5182290	CS Type Washer 3φ (SR-737, 7090 only)	
57	5232400	Circuit Board Holder (SR-737, 7090 only)	
58	7595621	S-0018 Circuit Board (SR-737 only)	
	7595961	S-0018 Circuit Board (SR-7090 only)	
59	7595601	S-0019 Circuit Board (SR-737 only)	
	7595951	S-0019 Circuit Board (SR-7090 only)	
60	5183020	P Type Nylon Washer 3φ (SR-737, SR-7090 only)	
61	6903282	Spring, circuit board stopper (SR-737, SR-7090 only)	
62	7102090	Bias Knob Ass'y (with Screw)	
	5105521	SS Type Setscrew M2.6 x 4	
63	6903370	Click Spring Ass'y (with steel ball)	
64	6903360	Spring, canceler cam	
65	6012520	Canceler Cam	
66	5151001	E Type Washer 1.5φ	
67	7052420	Canceler Lever Ass'y	
68	6903380	Spring, canceler lever	
69	5105520	SS Type Setscrew M2.6 x 3	
70	7082300	Tonearm Guide Ass'y (with 69)	
71	5103304	P Type Screw M2 x 6	
72	5124001	P Type Washer 2φ, lifter cam plate	
73	7012170	Lifter Cam Plate Ass'y (with 71 72)	
74	6012510	Lifter Cam Ass'y	
75	7052410	Lifter Lever Ass'y (with screw)	
	5105502	SS Type Setscrew M2 x 3	
76	5105640	SF Type Setscrew M3 x 3	
77	6622260	Arm Rest Ass'y (with 76)	
78	5052130	Cap, adjust	
79	5182990	P Type Thrust Washer 2φ	
80	5502770	Rubber	
81	6903120	Spring, link lever	
82	5151004	E Type Washer 3φ	
83	6502760	Link Lever	
84	5151004	E Type Washer 3φ	
85	6512180	Reverse Link Arm	
86	5103543	PT Type Screw M3 x 10	
87	5120161	P Type Washer 4φ	
88	5151004	E Type Washer 3φ	
89	6592040	Switch Fixing Board	
90	6903140	Spring, switch fixing board	
91	5103545	PT Type Screw M3 x 16	
92	5162720	PSA Type Screw M3 x 16	
93	5110241	H Type Nut 3φ	
94	1160250	Micro-Switch	
95	5182960	CS Type Washer 2φ	
96	6532150	Link Rod (2)	
97	6502750	Cam Lever	
98	5151004	E Type Washer 3φ	
99	6012370	Manual Cam	
100	5182960	CS Type Washer 2φ	
101	5182330	P Type Thrust Washer 4φ	
102	6903210	Spring, start lever	
103	6502790	Start Lever	
104	5151004	E Type Washer 3φ	
105	6502770	Auto Switch Lever	
106	6903090	Spring, auto switch lever	
107	5182960	CS Type Washer 2φ	
108	5182570	P Type Thrust Washer 4φ	
109	6903111	Spring, auto switch lever	
110	5182550	P Type Thrust Washer 3.5φ	
111	6903200	Spring (4), SS arm	
112	5151004	E Type Washer 3φ	
113	6903162	Spring, SS arm	
114	6592030	SS Arm	
115	6032180	Release Wire	
116	6903262	Spring (10), lever base	
117	5151004	E Type Washer 3φ	
118	6903130	Spring, back lever	
119	5182960	CS Type Washer 2φ	
120	6502810	Back Lever	
121	6632190	Lever Base	
122	5151004	E Type Washer 3φ	
123	6502820	Disk Size Selector	
	7062340	Repeat Cam Ass'y (with 124 ~ 130)	
124	5182970	CS Type Washer 8φ	
125	6012411	Repeat Cam (2)	
126	5182270	CS Type Washer 4φ	
127	5120161	P Type Washer 4φ	
128	6903070	Spring, repeat cam	
	5182650	P Type Thrust Washer 6.2φ	
129	6012381	Repeat Cam (1)	
130	6522070	Friction Washer	
131	6903220	Spring (6), link lever	
132	6502850	Link Lever	
	7062350	Repeat Grooved Cam Ass'y (with 133 ~ 138)	
133	6903191	Spring (3), reverse cam	
134	5151002	E Type Washer 2φ	
135	6502800	Reverse Lever	
136	6092020	Reverse Cam	
137	5100946	BT Type Screw M3 x 12	
138	6012363	Repeat Grooved Cam	
139	6903180	Spring (2), repeat link arm	
140	5182960	CS Type Washer 2φ	
141	6512170	Repeat Link Arm (2)	
142	5151004	E Type Washer 3φ	
143	6512160	Repeat Link Arm (1)	
144	5182970	CS Type Washer 8φ	
145	6012450	Start Cam	
146	5182960	CS Type Washer 2φ	
147	5182960	CS Type Washer 2φ	
148	6903190	Spring (3), manual check lever	
149	6502780	Manual Check Lever	
150	5182970	CS Type Washer 8φ	
151	5232440	P Type Felt Washer (1) 8.2φ	
152	6012440	Select Cam	
153	6502830	Disk Size Select Arm	
154	5100946	PT Type Screw M3 x 12	
155	6912560	Balance Weight	
156	6502741	Sensor Lever	
157	6502911	Driving Arm	
158	5151005	E Type Washer 4φ	
159	5151002	E Type Washer 2φ	
160	5232420	P Type Nylon Washer 2φ	
161	6422040	E Trip (Upper)	(SR-535, SR-5090)
	6422050	E Trip (Under)	
	6422060	E Trip (SR-737, SR-7090)	
162	6002050	Main Gear	
163	6502860	Release Lever	
164	5162710	PT Type Screw M4 x 8	
165	4320480	D.D Motor (SR-535, SR-5090)	
	5320500	D.D Motor (SR-737, SR-7090)	

Abbreviations

1. Pan Head Tapping Screw .....PT Type
2. Washer Head Tapping Screw .....WT Type
3. Pan Head Screw .....P Type
4. Pan Head SEMS A Screw ....PSA Type
5. Pan Head SEMS B Screw ....PSB Type
6. Binding Head SEMS F Screw ..BSF Type
7. Binding Head Screw .....B TYPE
8. Flat Counter Sunk Head Screw..F Type
9. Flat Counter Sunk Wood Screw .....FC Type
10. Round Head Wood Screw ....RH Type
11. Hex. Socket Setscrew..SC Type
12. Slot Type Setscrew..SS Type
13. Binding Head SEMS B Screw .....BSB Type
14. Spring Washer .....S Type
15. Plain Washer .....P Type
16. Retaining Ring (E Washer)..E Type
17. Toothed Lock Washer (External) .....TLE Washer
18. Wave Washer
19. Hexagon Nut H Type Nut

Exploded View

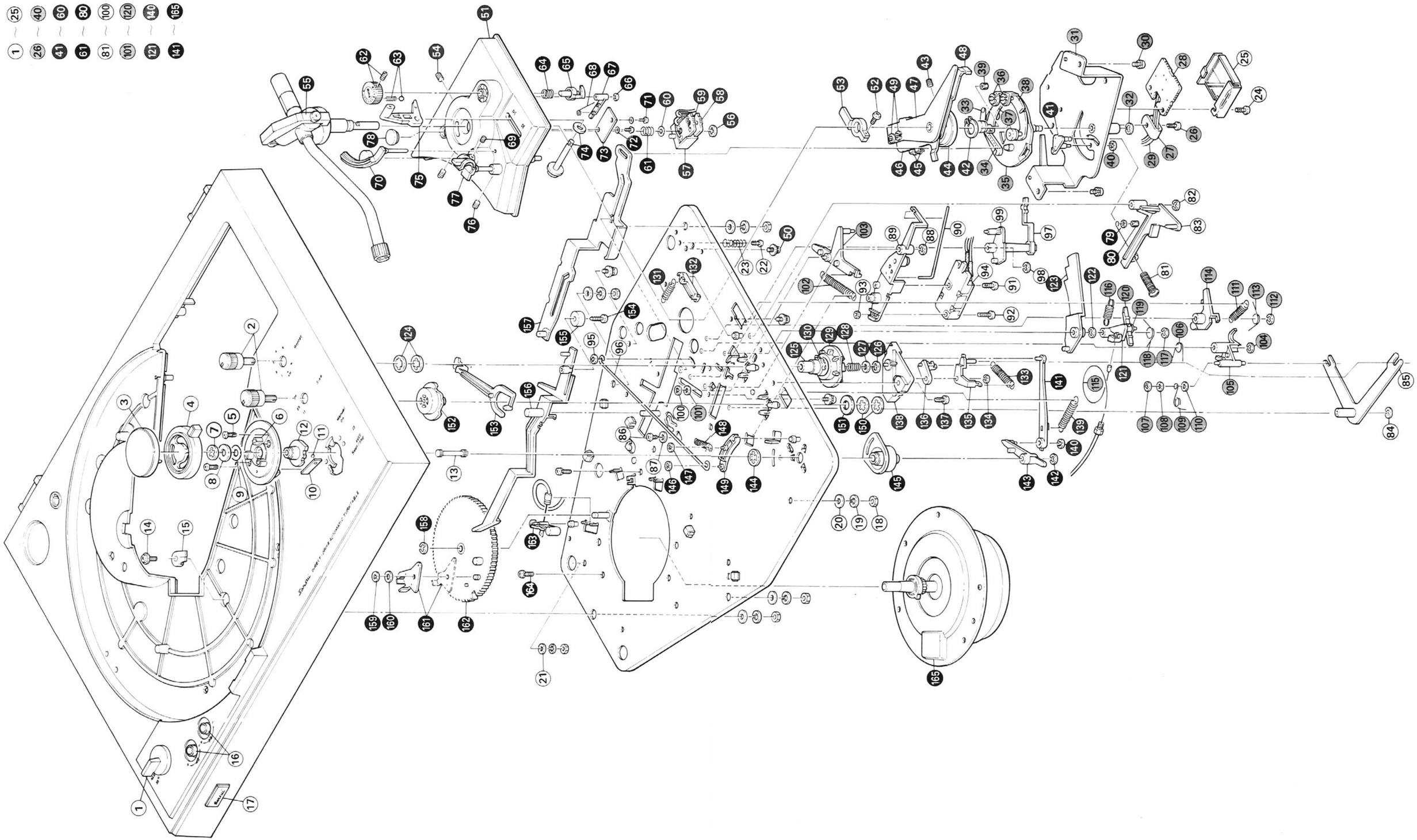

6. PARTS LOCATION & PARTS LIST

Since some of capacitors and resistors are omitted from parts lists in this Service Manual, refer to the common parts list for capacitors & resistors which was appended previously to each Sansui Manual.

1) S-0013 Motor Control Circuit Board (Stock No. 7595771 SR-737/SR-7090)

Conductor Side

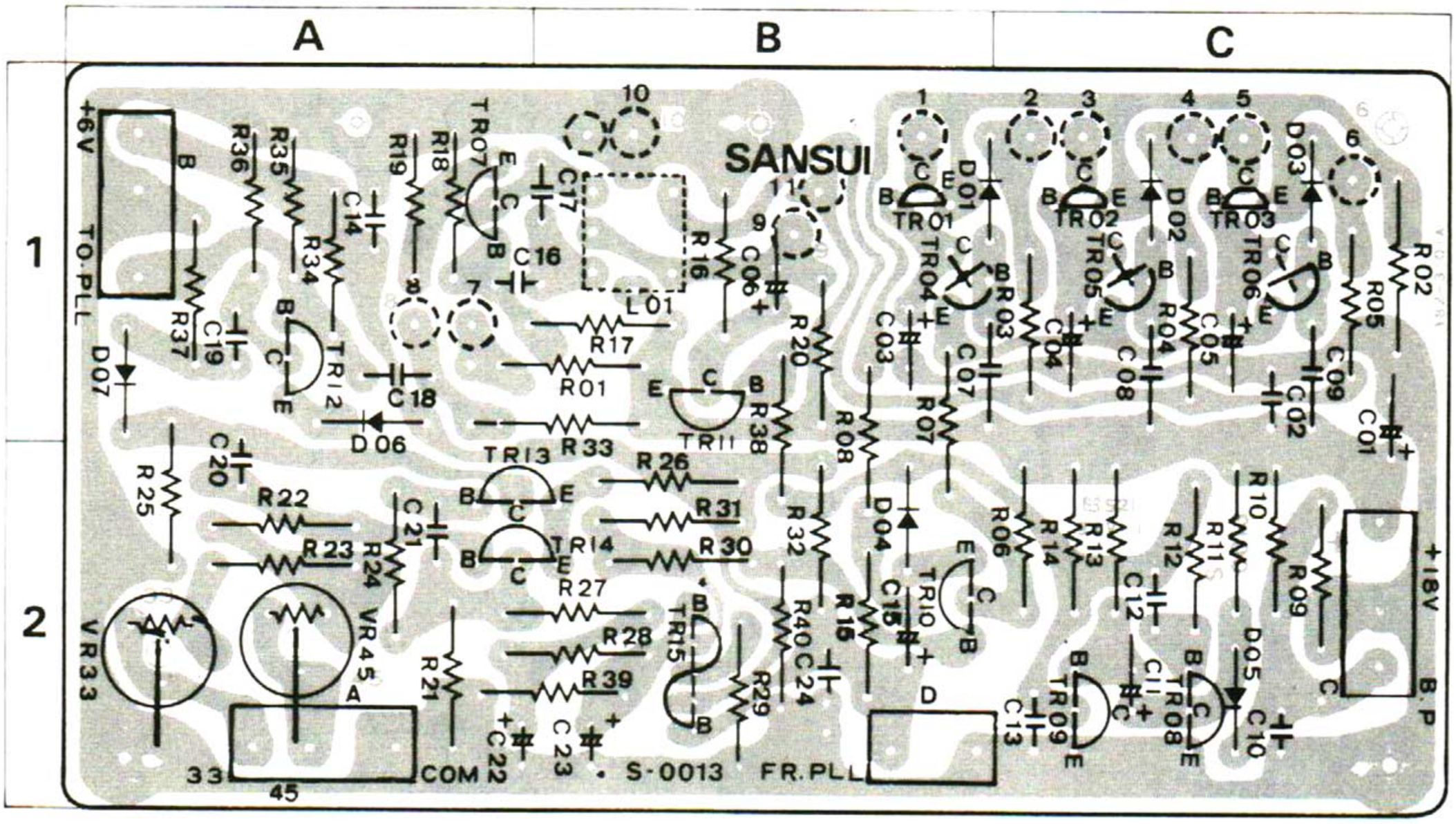

Parts List

Parts No.	Stock No.	Description	Position
TR01 ~03	0308590, 2	2SD471 (M, L, K) Transistor	1B, 1C
TR04 ~06	0300680, 1	2SA733 (P, Q) Transistor	1B, 1C
TR07 ~09	0305951 ~3	2SC945 (Q, P, K) Transistor	1A, 1C
TR10	0305952	2SC945 (P) Transistor	2B
TR11, 12	0300680, 1	2SA733 (P, Q) Transistor	1B, 1A
TR13, 14	0300680	2SA733 (P) Transistor	2A
TR15		2SC1583 (G) Transistor	2B
D 01 ~07	0311050	1S953 Diode	1B
C 02	0656223	22000pF 25V C.C	1C
C 10	0656223	22000pF 25V C.C	2C
C 14	0656223	22000pF 25V C.C	1A
C 20	0625103	10000pF 50V P.C	2A
C 24	0656223	22000pF 25V C.C	2B
R 01	0200821	820Ω ½W N.I.R.	
	0200102	1kΩ ½W N.I.R.	
	0200122	1.2kΩ ½W N.I.R.	
	0200152	1.5kΩ ½W N.I.R.	
	0200182	1.8kΩ ½W N.I.R.	1B
R 01	0200222	2.2kΩ ½W N.I.R.	
	0200272	2.7kΩ ½W N.I.R.	
	0200332	3.3kΩ ½W N.I.R.	
R 02	0200229	2.2ΩM	1C
VR33	1035190	100kΩ (B)	2A
VR45	1035190	100kΩ (B)	2A
L 01	4220700	OSC Coil	1B
LD01	0319140	SR106C L.E.D	
TR20	0390010	PH101 Transistor	

2) S-0014 PLL Servo Circuit Board (Stock No. 7595581) SR-737 (Stock No. 7595981) SR-7090

Conductor Side

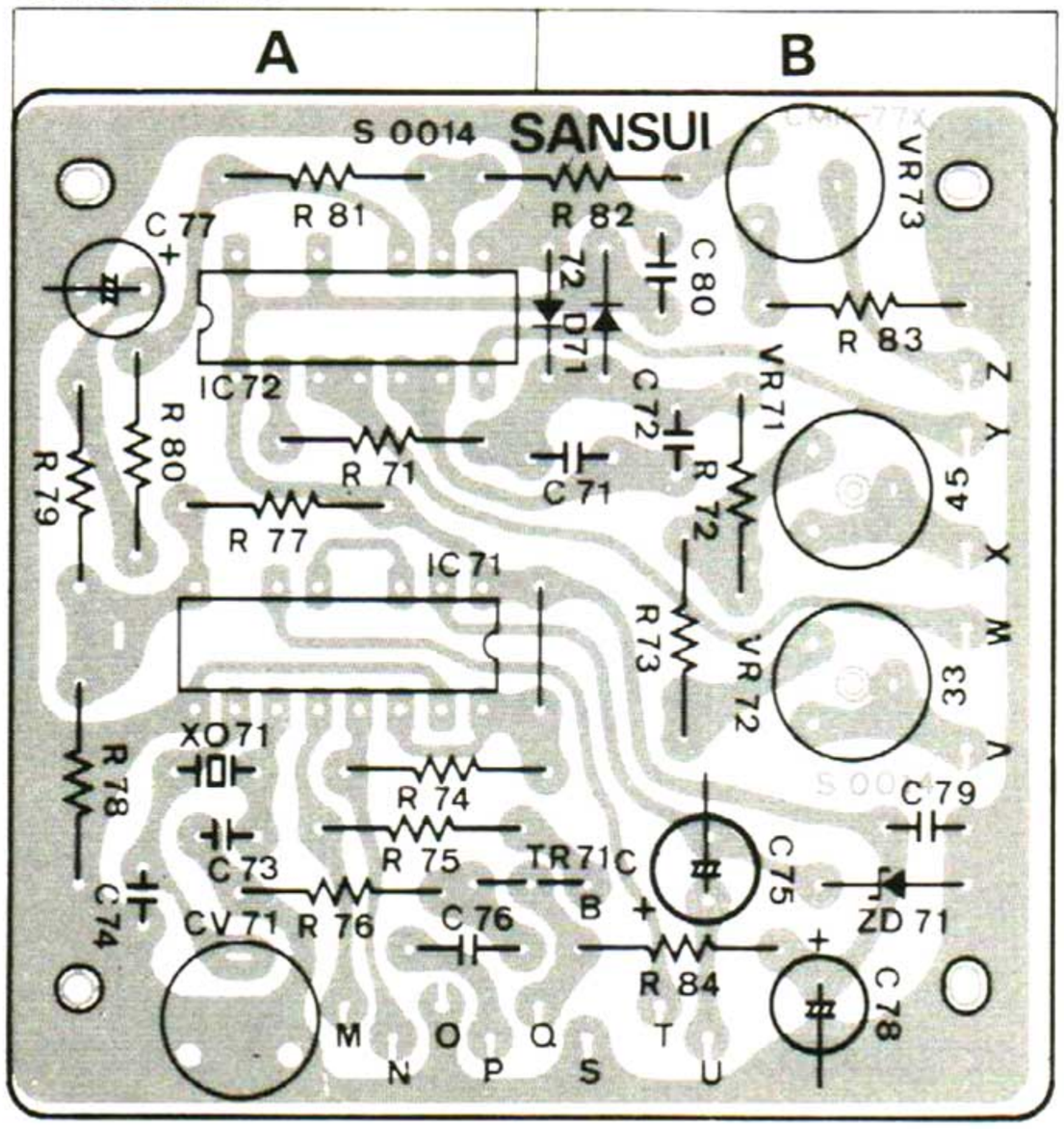

Parts List

Parts No.	Stock No.	Description	Position
IC 71	0360560	MSM5810 IC	A
IC 72	0360570	MSM4069 IC	A
ZD71	0315770	EQA01-065 Zener Diode	B
C 79, 80	0657223	22000pF 50V C.C	B
R 72	0231334	330kΩ ½W M.R	
R 73	0231154	150kΩ ½W M.R	
VR71, 72	1034360	330kΩ (B)	B
VR73	1035160	33kΩ (B)	

3) S-0016 Power Supply Circuit Board (Stock No. 7502541 XX, 7502543 EU, 7502544 CSA, 7502548 UL. 7502549 BS) SR-737 (Stock No. 7502711) SR-7090

Conductor Side

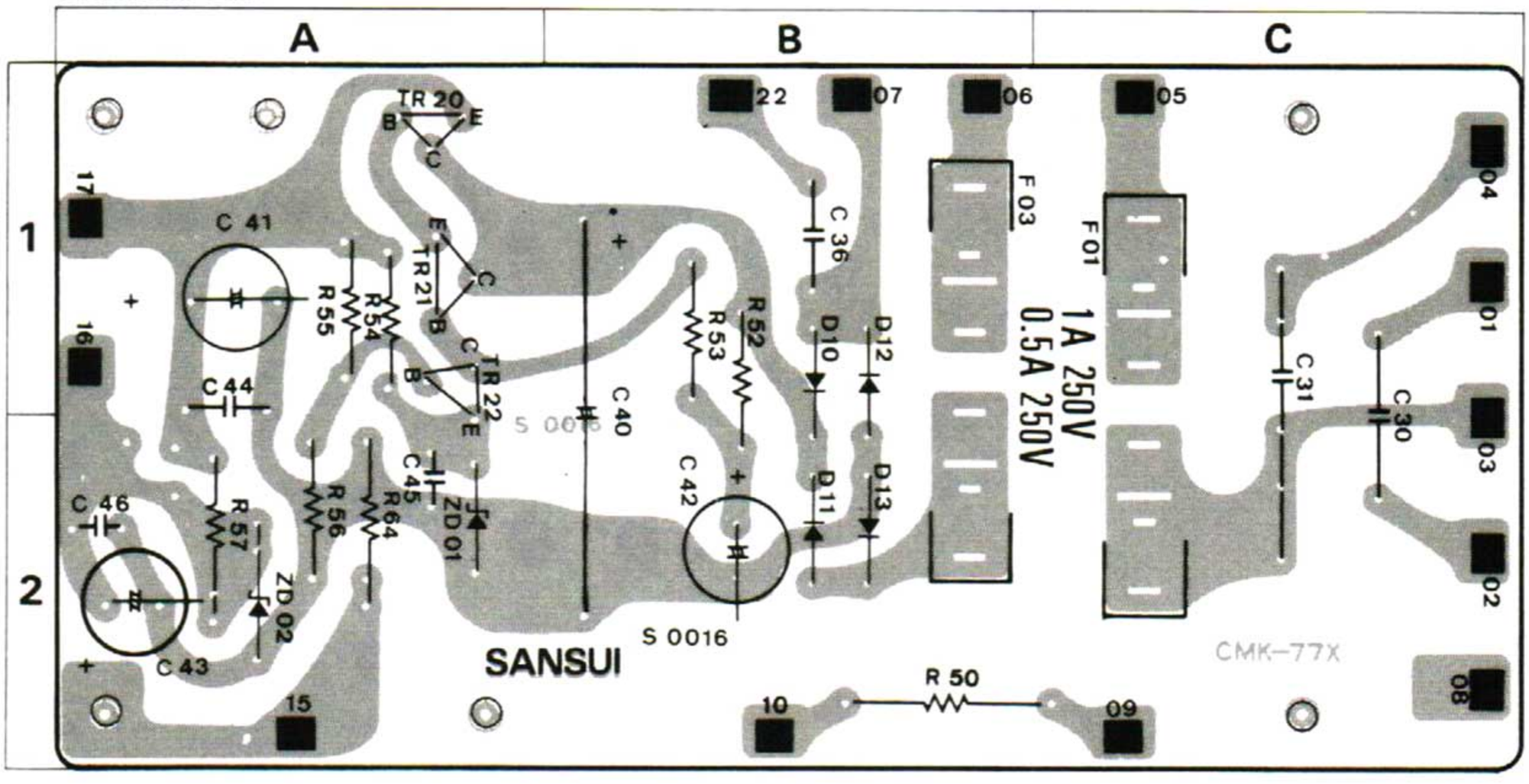

Parts List

Parts No.	Stock No.	Description	Position
TR20	0306541 ~ 3	2SC1986 (Q, Y, G)	
TR21	0305951 ~ 3	2SC945 (Q, P, K) Transistor	1A
TR22	0306070 ~ 2	2SC1313 (F, G, H)	1A
D 10 ~ 13	0310340	10D1 Diode	1, 2B
ZD01	0316630	RD5.1E Zener Diode	2A
ZD02	0315580	EQB01-07 Zener Diode	2A
C 30, 31	0598337	0.033μF 250V M.C. EU, BS	
C 31	0603337	0.033μF 125V M.C. UL (SR-737)	
	0605337	0.033μF 250V M.C. XX (SR-737)	
	0635337	0.033μF 125V P.C. C.S.A. (SR-737)	
C 36	0602108	0.1μF 100V M.C. EU, BS	
C 40	0505471	470μF 50V E.C.	1, 2B
C 44	0656473	47000pF 25V C.C.	1A
R 50	0211333	33kΩ 1W N.I.R. EU, BS (SR-737)	2B
	0211123	12kΩ 1W N.I.R. XX, C.S.A., UL	
R 57	0211391	390Ω 1W N.I.R.	2A
F-01	0432210	0.5A 250V AC Fuse XX, C.S.A., UL	1, 2C
F 03	0432220	1A 250V AC Fuse XX, C.S.A., UL	1, 2B
	0435090	800mA 250V AC Fuse EU, BS (SR-737)	
	2310220	Fuse Holder (Large) XX, C.S.A., UL	
	2310230	Fuse Holder (Small) EU, BS	

4) S-0020 Sensor Amplifier Circuit Board (Stock No. 7595561) SR-737 (Stock No. 7595971) SR-7090

Conductor Side

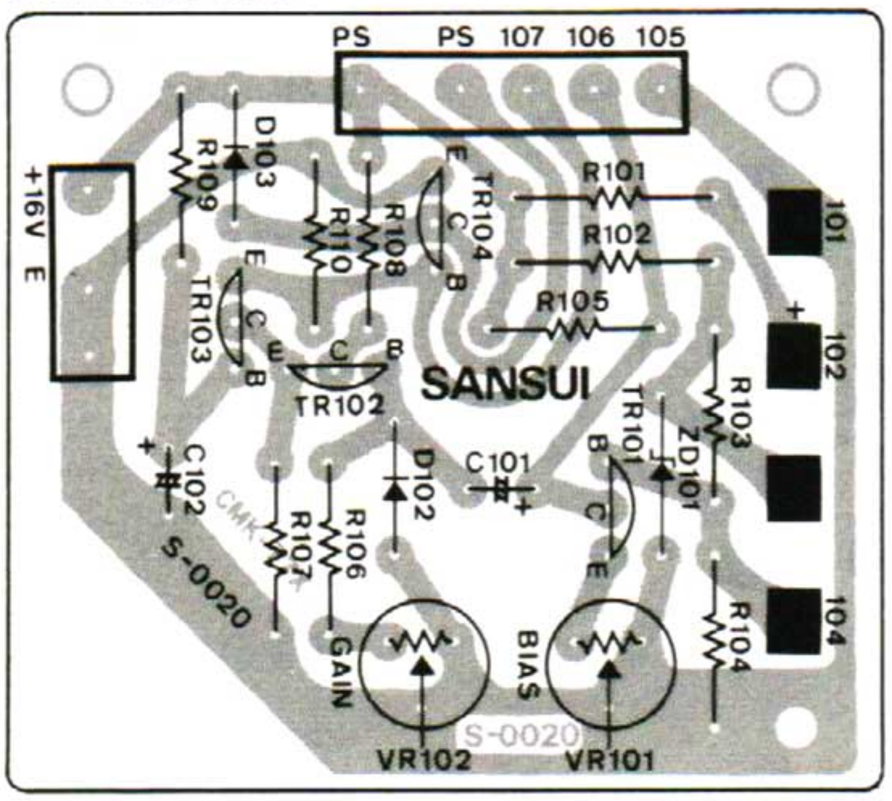

Parts List

Parts No.	Stock No.	Description	
TR101 ~ 103	0305951, 2	2SC945 Q, P	Transistor
TR104	0308591, 2	2SD471 L, K	
D 102	0311050	1S953	Diode
D 103	0310340	10D1 (1S2226)	
ZD101	0316250	RD-10E B Zener Diode	
C 101	0573100	35V 10μF	
R101 ~ 102	0103681	680Ω ½W	
VR101	1035040	330Ω (B)	
VR102	1035200	150kΩ (B)	
	2410570	5P Pin Ass'y Type D	
	2410580	3P Pin Ass'y Type D	

5) S-0018 L E D Circuit Board

(Stock No. 7595621/SR-737)
(Stock No. 7595961/SR7090)

Conductor Side

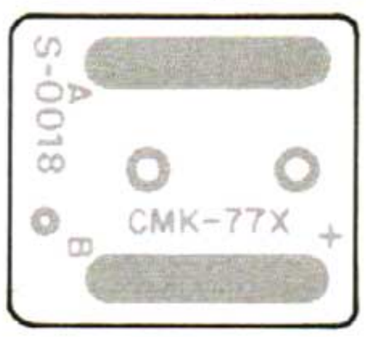

Parts List

Parts No.	Stock No.	Description
LD01	0319140	SR-106C LED

6) S-0019 C D S Circuit Board

(Stock No. 7595601/SR-737)
(Stock No. 7595951/SS-7090)

Conductor Side

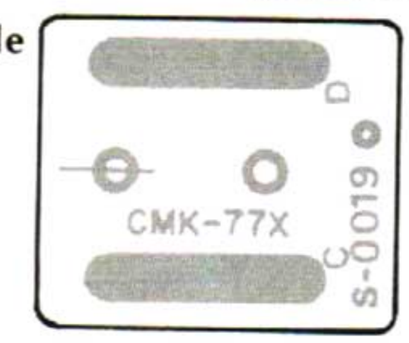

Parts List

Parts No.	Stock No.	Description	
CD01	0920070	P380-05 cds 25 ~ 60kΩ	cds

7) V.G Servo Circuit Board (SR-535/SR-5090)

Note: Complete V.G Servo printed circuit board will not be supplied due to an assembly board with D.D motor. When necessary, order D.D motor (Stock No. 4320480) which contains complete V.G Servo printed circuit board. But, individual parts on V.G Servo printed circuit board will be supplied to your order.

Conductor Side

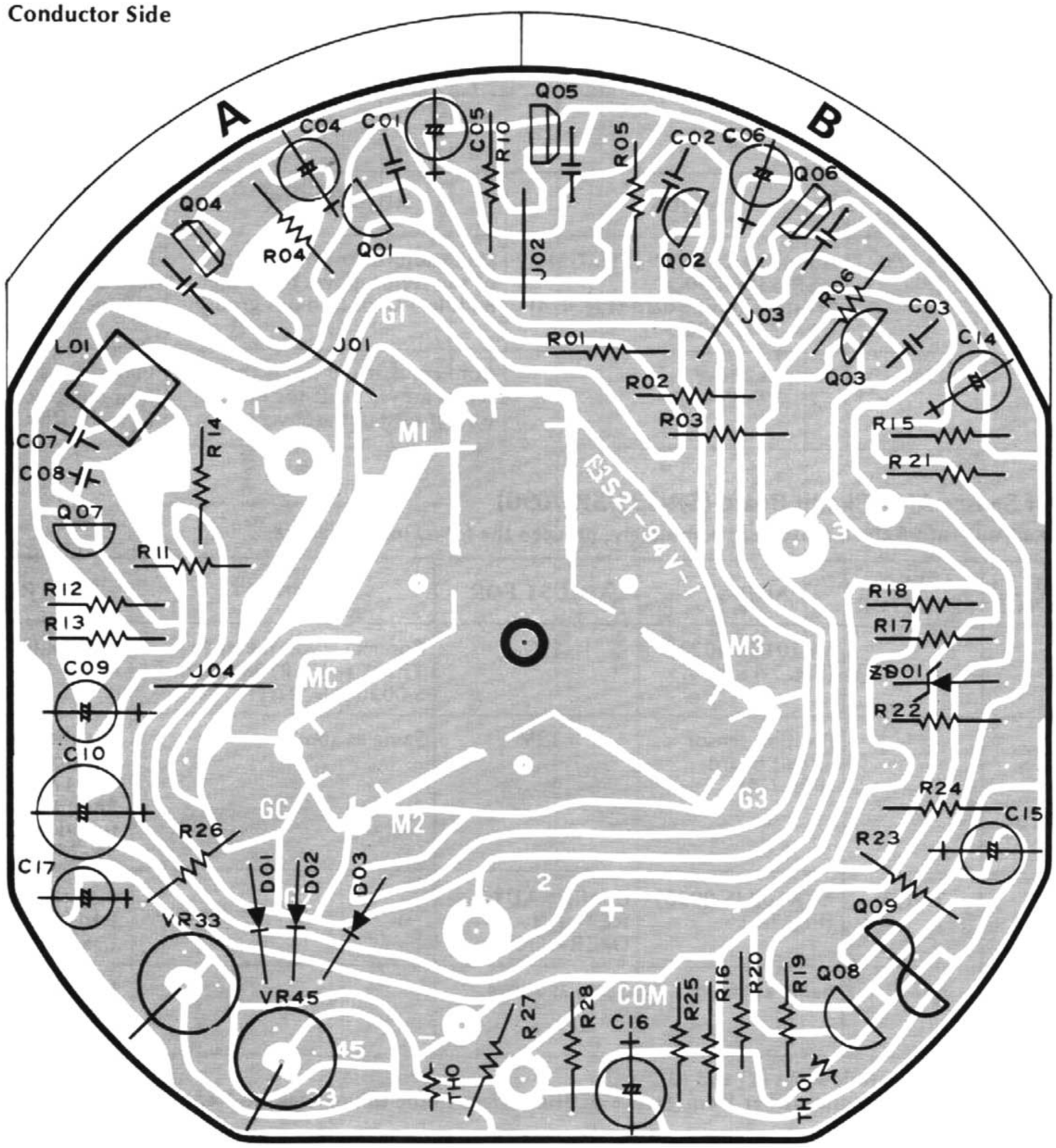

Parts List

Parts No.	Stock No.	Description	Position
Q 01 ~03	0300680, 1	2SA733 (P, Q) Transistor	A, B
Q 04 ~06	0308590, 1, 2	2SD471 (M.L.K) Transistor	A, B
Q 07, 08	0305951, 2, 3	2SC945 (Q.P.K) Transistor	A, B
Q 09	0360291, 2	2SA798 (G.H) Dual Transistor	B
ZD01	0316630	RD5.1E Zener Diode	B
D 01 ~03	0311180	1S1588 Diode	A

Parts No.	Stock No.	Description	Position
TH01, 02	0320140	SDT-100 Thermistor	
C 01 ~03	0656473	0.047μF 25V C.C.	A, B
C 07	0601107	0.01μF 50V M.C	A
C 08	0601226	0.0022μF 50V M.C	A
R 10	0200229	2.2Ω ½W N.I.R.	A
R 20	0240911	910Ω ¼W C.R	

Parts No.	Stock No.	Description	Position
R 25	0240912	9.1kΩ ¼W C.R.	
L 01	4220700	Oscillator Coil	
	2420480	Connector	
	2230170	Chip Terminal	

Abbreviations

C.R.	: Carbon Resistor	**N.I.R.**	: Non-Inflammable Resistor	**C.C.**	: Ceramic Capacitor
S.R.	: Solid Resistor	**M.C.**	: Mylar Capacitor	**Mi.C.**	: Mica Capacitor
Ce.R.	: Cement Resistor	**E.C.**	: Electrolytic Capacitor	**O.C.**	: Oil Capacitor
M.R.	: Metal Film Resistor	**BP.E.C.**	: Bi-Polar Electrolytic Capacitor	**P.C.**	: Polystyrene Capacitor
F.R.	: Fusing Resistor			**T.C.**	: Tantalum Capacitor

8) S-0015 Power Supply Circuit Board (Stock No. 7502521 XX, 7502523 EU, 7502524 CSA, 7502528 UL, 7502529 BS/SR-535) (Stock No. 7502721/SR-5090)

Conductor Side

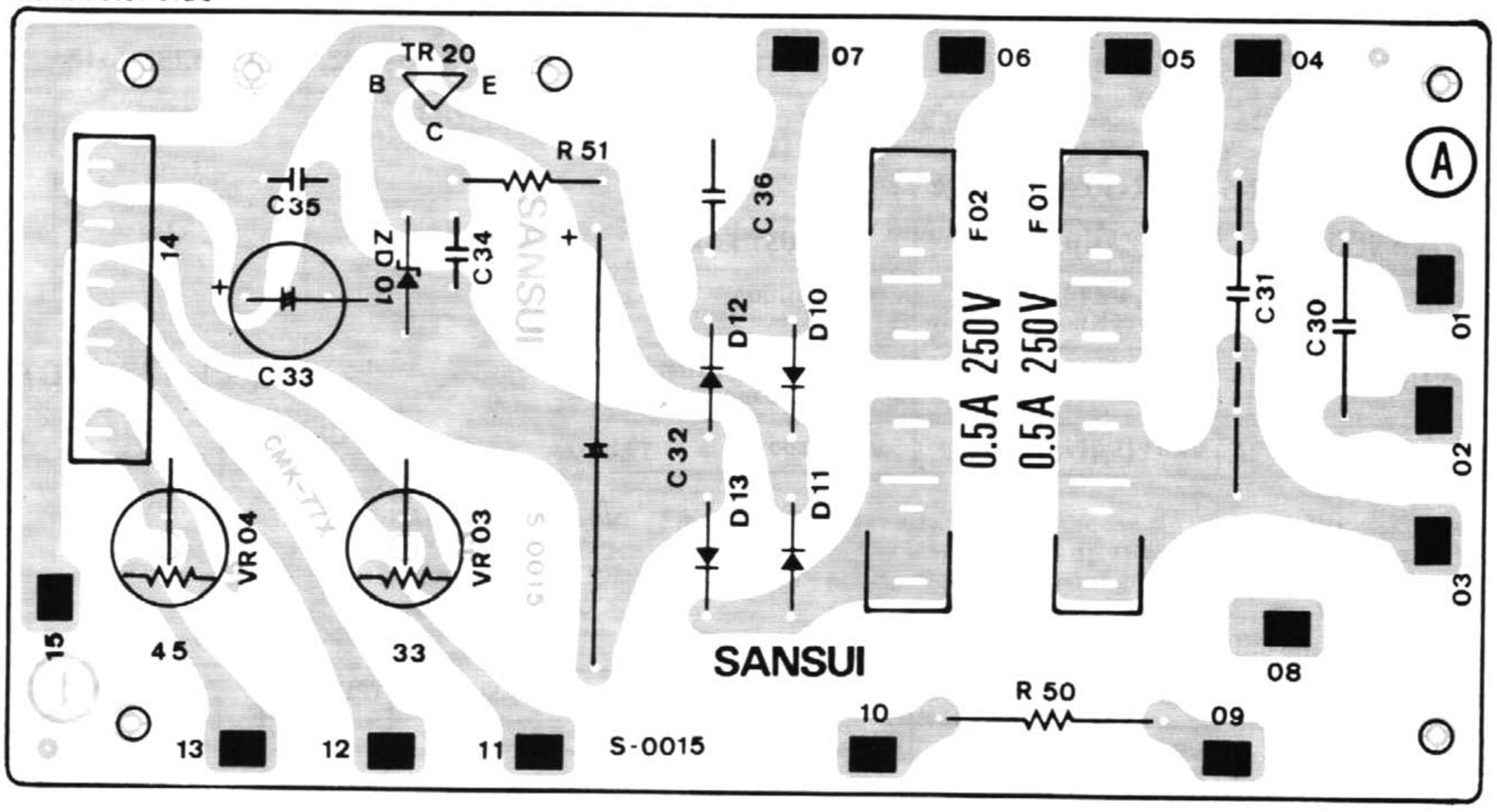

Parts List

Parts No.	Stock No.	Description
TR 20	0308391, 2, 3	2SD313 (D, E, F) Transistor
D 10 ~ 13	0310340	10D1 (1S2226) Diode
ZD 01	0315380	RD-19AM Zener Diode
C 30, 31	0598337	0.033μF 250V M.C. EU, BS
C 31	0603337	0.033μF 125V M.C. UL
	0635337	0.033μF 125V P.C. C.S.A.
	0605337	0.033μF 250V M.C. XX
C 32	0505331	330μF 50V E.C.

Parts No.	Stock No.	Description
C 34	0656473	47,000pF 25V C.C.
C 36	0602108	0.1μF 100V M.C.
R 50	0211123	12kΩ 1W N.I.L. . . . UL, C.S.A., XX
	0211333	33kΩ 1W N.I.L. . . . BS, EU
VR03, 04	1035130	10kΩ (B), Semi-variable Resistor

Parts No.	Stock No.	Description
F 01, 02	0432210	AC Fuse 0.5A 250V . . . UL, C.S.A., XX
F 02	0435060	Time-Lag Fuse 400mA 250V . . . BS, EU
	2310220	Fuse Holder (Large) XX, C.S.A., UL
	2410570	5P Pin Ass'y Type D

9) S-0012 Circuit Board for connections between P.U output cord & color wires from cartridge (Stock No. 2593661 SR-535/SR-5090/SR-737/SR-7090)

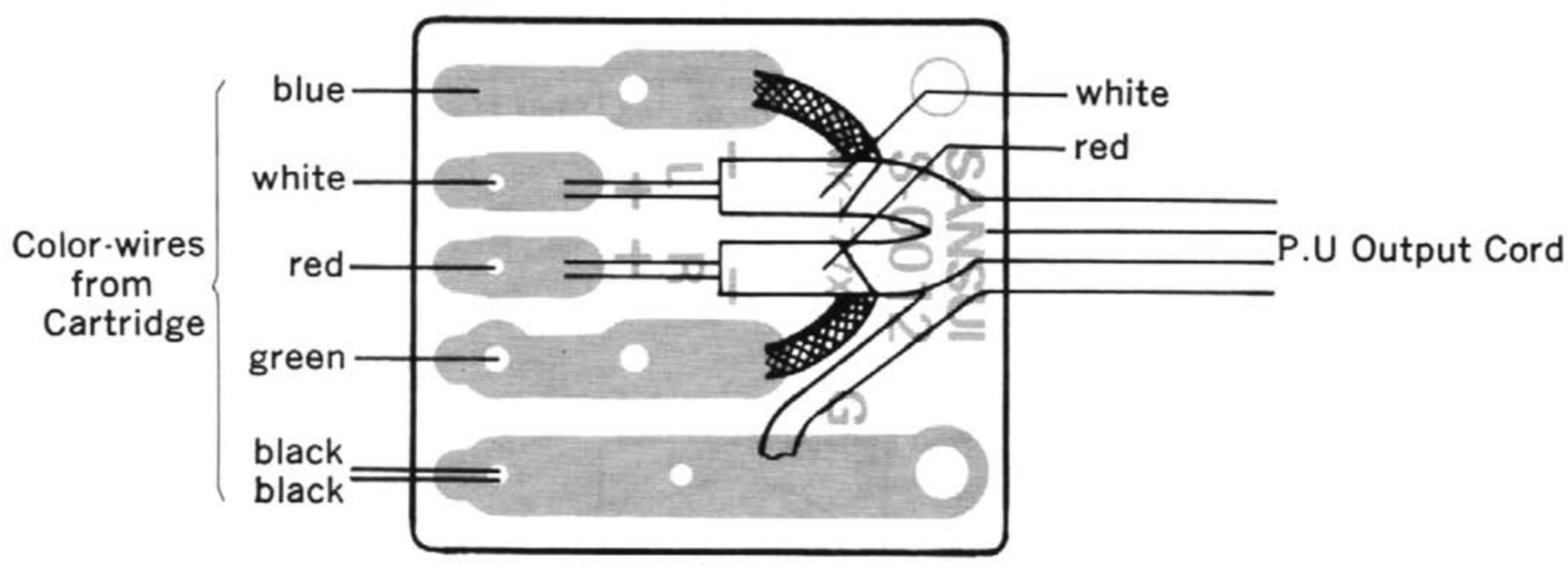

NOTE:

AS to U.L., C.S.A., B.S., ES and XX marked in the Parts Lists, note the followings:

U.L., C.S.A. . . Approved parts used in the unit which is applicable to the U.S. and Canada under safety standard.

B.S. . . . . Approved parts used in the unit which is applicable to British under safety requirement.

E.U. . . . . Approved parts used in the unit which is applicable to Sweeden, Denmark, Norway, Finland, West Germany, and Switzerland under safety requirement.

XX . . . . . Parts used in the unit which is applicable to other countries excepting mentioned above.

* Parts unspecified such as CSA, UL, EU & XX in "Description" are common parts.

7. ADJUSTMENTS

1. Speed adj

1) SR-535/SR-5090

(See Bottom View SR-535/SR-5090 on page 7)

STEP	SPEED SELECTOR	ADJUST	ADJUST FOR
1	33-1/3	VR13, VR14 (Control Knob on Panel)	Center position.
2	33-1/3	VR03 (S-0015)	Strobo marking pattern appears to stand still.
3	45	VR04 (S-0015)	Same as above.

2) SR-737/SR-7090

For adjustment, set the unit horizontally and attach the turntable platter.

STEP	SPEED SELECTOR	ADJUST	ADJUST FOR	MEASURE OUTPUT	REMARKS
1	33-1/3	VR733, VR745 (Control Knob on panel)	Center position		
2	33-1/3	VR73 (S-0014)	1.25V	Connect a volt meter (20 kΩ/V) to D terminal on S-0013 (Fig. 7-1)	Make short between TP Pin (S-0014) & chassis. (Fig. 7-1) After adjustment, disconnect the volt meter (20 kΩ/V)
3	33-1/3	VR33 (S-0013)	Strobo marking pattern appears to stand still.		Same as above.
4	45	VR45 (S-0013)	Same as above.		Same as above. After this adjustment, disconnect the shorting lead between TP Pin & chassis.
5	33-1/3	VR73 (S-0014)	1.25V	Connect a volt meter (20 kΩ/V) to D terminal on S-0013 (Fig. 7-1)	Stop the rotation of turntable pressing down the platter. After adjustment, disconnect the volt meter (20 kΩ/V)
6	33-1/3	VR72 (S-0014)	Strobo marking pattern appears to stand still.	Connect oscilloscope as Fig. 7-1.	
7	33-1/3	VR33 (S-0013)	Set the waveform on oscilloscope to adjusted one as Fig. 7-2.	Same as above.	
8	45	VR71 (S-0014)	Strobo marking pattern appears to stand still.	Same as above.	
9	45	VR45 (S-0013)	Set the waveform on oscilloscope to adjusted one as Fig. 7-2.	Same as above.	

Fig. 7-1

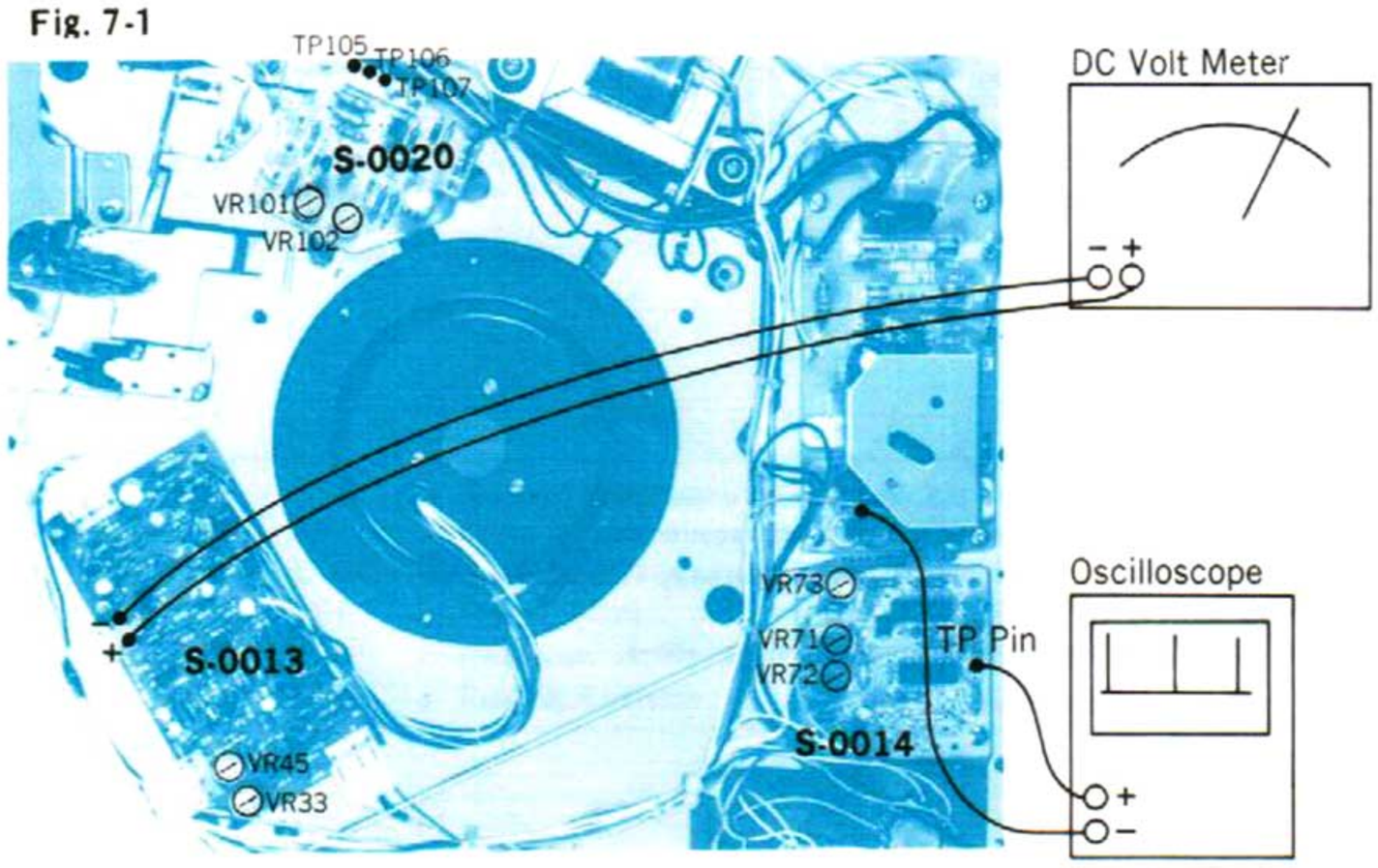

Fig. 7-2

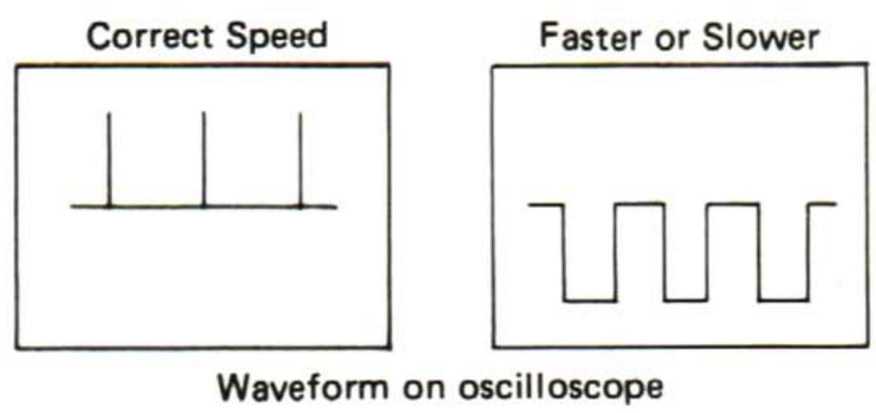

2. Adjustments of AUTO-IN and AUTO-RETURN

1) AUTO-IN adj.

STEP	SIZE SELECTOR	SPEED SELECTOR	ADJUST	ADJUST FOR	REMARKS
1	30	33-1/3	Adjusting cam "A" (Fig. 7-3)	Make adjustment that the tip of the stylus touches the middle way of the lead-in groove.	Play the disk that has short lead-in groove. Use 30 cm (12 inch) Disk.
2	17	45	Same as above.	Confirm that the tip of the stylus touches the middle way of the lead-in groove.	Play the disk that has short lead-in groove. Use 17 cm (7 inch) Disk.

2) AUTO-RETURN adj.

STEP	SIZE SELECTOR	SPEED SELECTOR	ADJUST	ADJUST FOR	REMARKS
1	30	33-1/3	Adjusting cam "B" (Fig. 7-3) <SR-535/5090> Sensor Circuit Board (Fig. 7-4) <SR-737/7090>	Make adjustment that the tip of the stylus moves up at the middle way of lead-out groove.	Play the disk that has short lead-out groove. Use 30 cm (12 inch) Disk.
2	17	45	Same as above.	Confirm that the tip of the stylus moves up at the middle way of lead-out groove.	Play the disk that has short lead-out groove. Use 17 cm (7 inch) Disk.

3) Adjustment of Sensor AMP Circuit Board (SR-737/SR-7090)

Note: If unable to adjust Auto-Return movement completely, proceed the following procedure.

STEP	SIZE SELECTOR	SPEED SELECTOR	ADJUST	ADJUST FOR	CONNECT	REMARKS
1			VR101 (S-0020) (Fig. 7-1)	1V	Connect a volt meter to TP105 (−), TP106 (+) on S-0020 (Fig. 7-1)	Put the tone arm on the arm rest.
2			Position sensor circuit board (Fig. 7-4)	13V	Same as above.	Put the stylus on the finishing groove of disk. Use 17 cm (7 inch) Disk. Shim the plunger not to function. (See Bottom View SR-737/SR-7090 on page 7)
3	30	33-1/3	*VR102 (S-0020) (Fig. 7-1)	Confirm AUTO-RETURN OPERATION		Play the disk that has short lead-out groove. Use 30 cm (12 inch) Disk.
4	17	45	Same as above.	Same as above.		Play the disk that has short lead-out groove. Use 17 cm (7 inch) Disk.

* Do not turn VR102 except the followings (1) and (2).
(1) If stylus tip would move up too earlier from groove of disk surface in the timing of Auto-Return movement, turn VR102 counter-clockwise.
(2) If stylus tip would not move up even in finishing groove of disk surface, turn VR102 clockwise.

Fig. 7-3

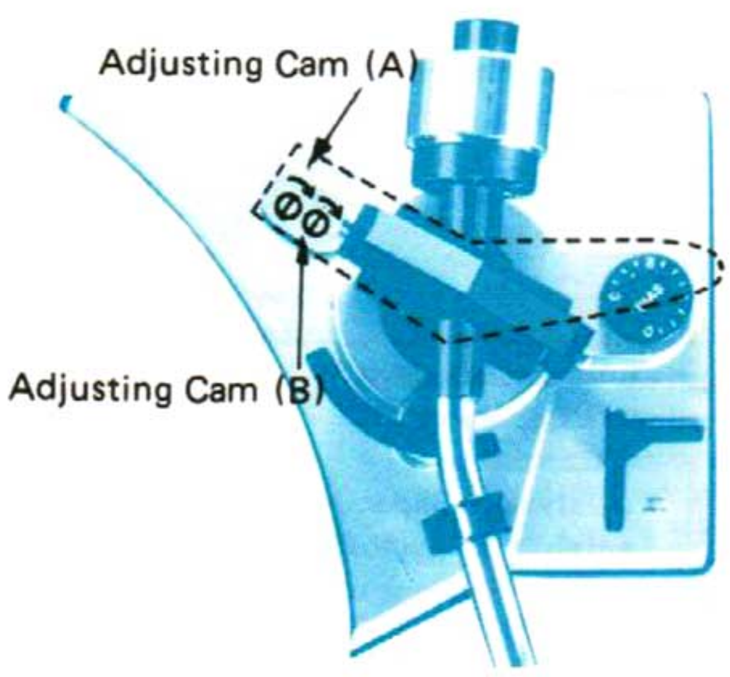

Fig. 7-4

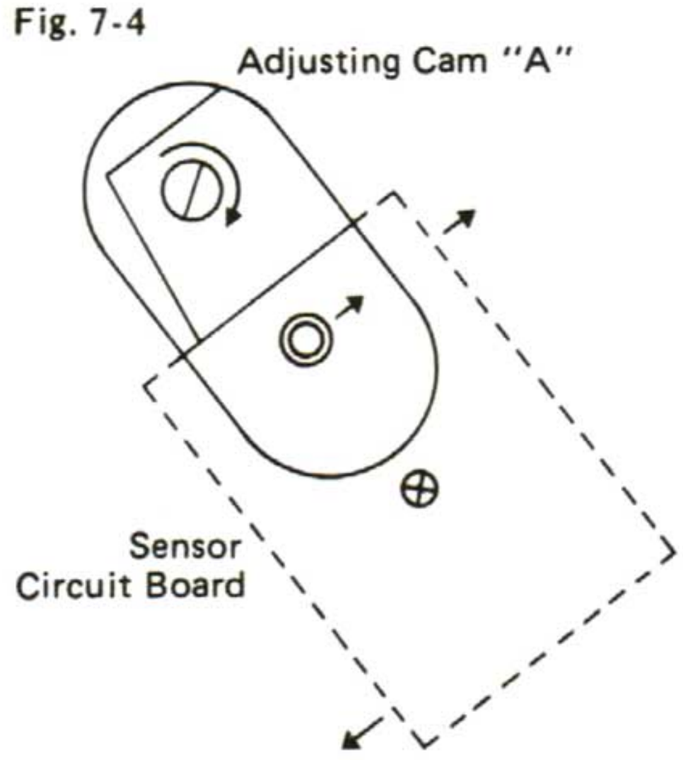

Fig. 7-5

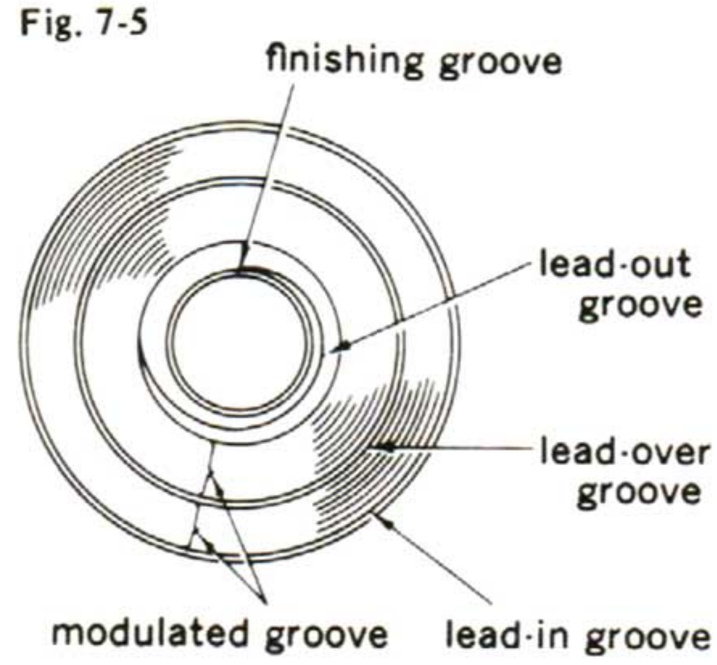

SR-535/5090
SR-737/7090

• Änderungen, die dem technischen Fortschritt dienen, bleiben vorbehalten.
• Design and specifications subject to change without notice for improvements.

8. SCHEMATIC DIAGRAM 1) SR-737/SR-7090

<SR-737/SR-7090 XX, UL, CS>

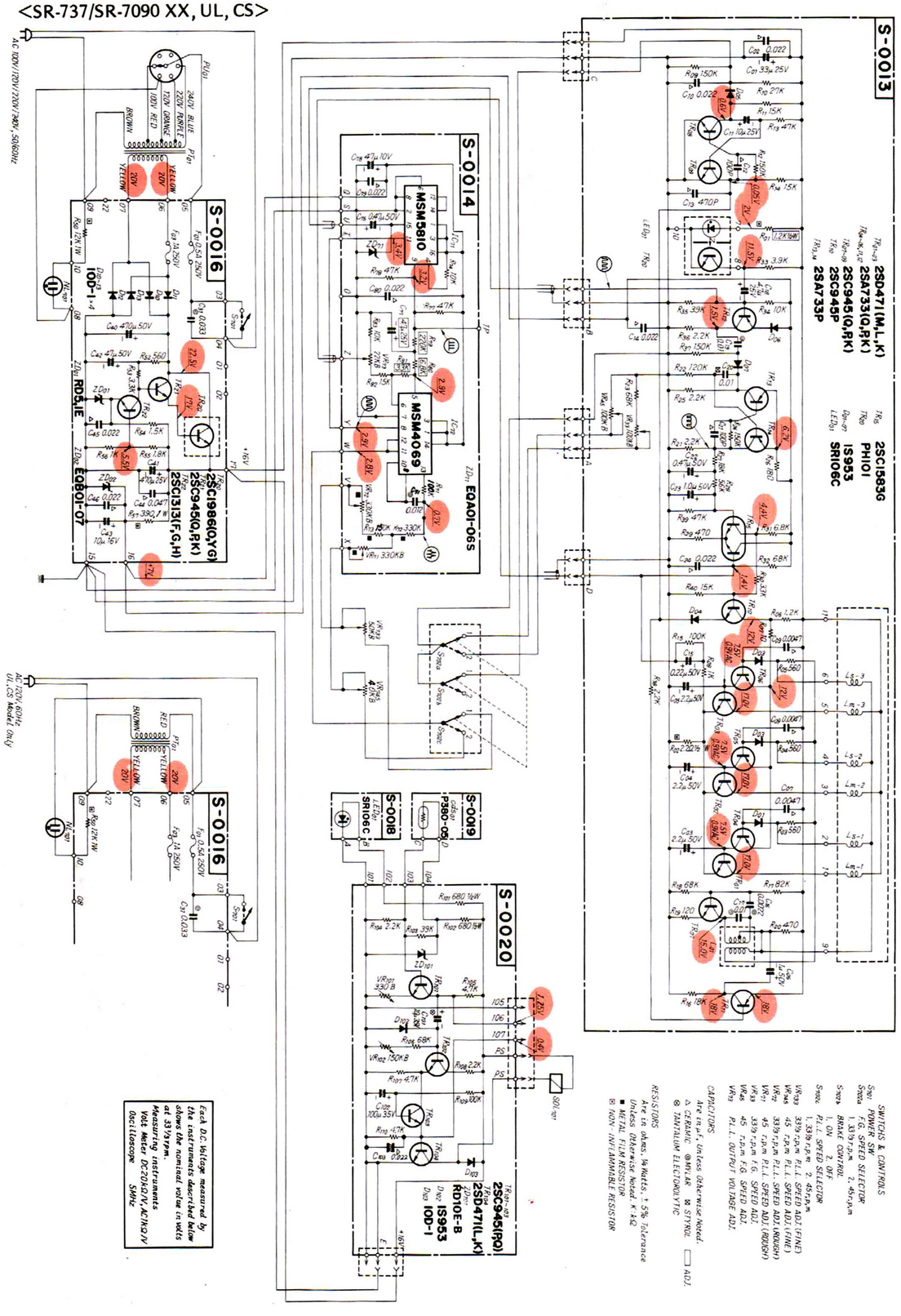

Each D.C. Voltage measured by the instruments described below shows the nominal value in volts at 33⅓rpm.
Measuring instruments
Volt Meter DC20KΩ/V, AC1KΩ/V
Oscilloscope 5MHz

SWITCHS & CONTROLS
Sw1 POWER SW
Sw2a F.G. SPEED SELECTOR
1. 33⅓r.p.m
Sw2b BRAKE CONTROL
1. ON
2. OFF
Sw3a F.G. SPEED SELECTOR
1. 33⅓r.p.m 2. 45r.p.m
Sw3b P.L.L. SPEED SELECTOR
1. 33⅓r.p.m 2. 45r.p.m
VR103 33⅓r.p.m P.L.L. SPEED ADJ.(FINE)
VR104 45 r.p.m P.L.L. SPEED ADJ.(ROUGH)
VR105 45 r.p.m P.L.L. SPEED ADJ.(FINE)
VR107 33⅓r.p.m P.L.L. SPEED ADJ.(ROUGH)
VR111 33⅓r.p.m F.G. SPEED ADJ.
VR116 45 r.p.m F.G. SPEED ADJ.
VR117 P.L.L. OUTPUT VOLTAGE ADJ.

CAPACITORS
Are in μF, Unless Otherwise Noted.
△ CERAMIC ◎ MYLAR ⊠ STYROL ▭ ADJ.
⊗ TANTALUM ELECTROLYTIC

RESISTORS
Are in ohms, ¼ Watts, 1.5% Tolerance
Unless Otherwise Noted. K=kΩ
■ METAL FILM RESISTOR
⊠ NON-INFLAMMABLE RESISTOR

<SR-7 :U, BS, AS>

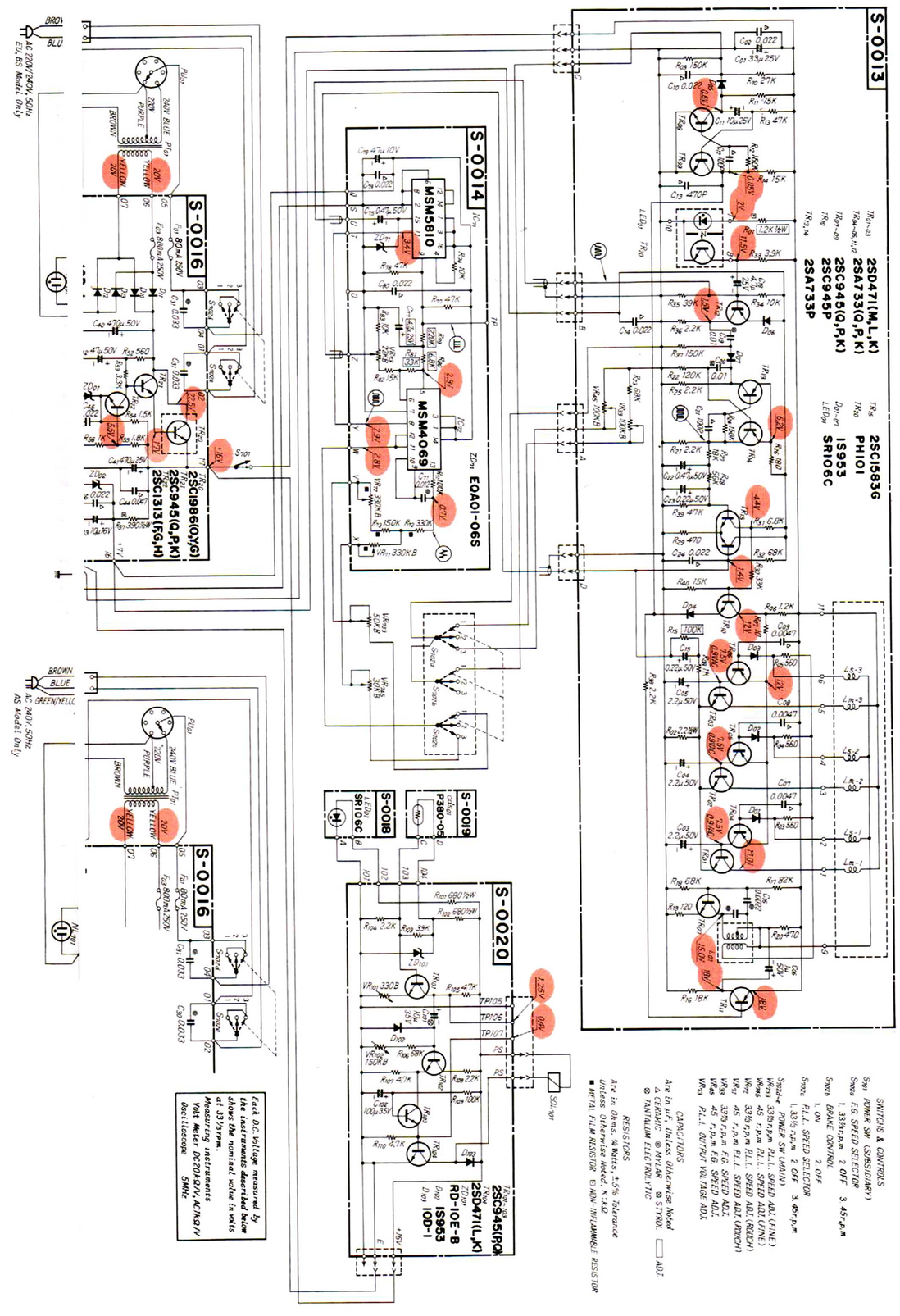

Each D.C. Voltage measured by the instruments described below shows the nominal value in volts at 33⅓rpm.
Measuring instruments
Volt Meter DC20KΩ/V, AC1KΩ/V
Oscilloscope 5MHz

SWITCHS & CONTROLS
Sw1 POWER SW (QUBISJUNIOR)
Sw2a F.G. SPEED SELECTOR
1. 33⅓r.p.m 2. OFF 3. 45r.p.m
Sw2b BRAKE CONTROL
1. ON
2. OFF
Sw3a P.L.L. SPEED SELECTOR
1. 33⅓r.p.m 2. OFF 3. 45r.p.m
Sw3b+ POWER SW (MAIN)
VR103 33⅓r.p.m P.L.L. SPEED ADJ.(FINE)
VR104 45 r.p.m P.L.L. SPEED ADJ.(FINE)
VR105 45 r.p.m P.L.L. SPEED ADJ.(ROUGH)
VR107 33⅓r.p.m P.L.L. SPEED ADJ.(ROUGH)
VR111 45 r.p.m P.L.L. OUTPUT VOLTAGE ADJ.
VR116 33⅓r.p.m F.G. SPEED ADJ.
VR117 45 r.p.m F.G. SPEED ADJ.

CAPACITORS
Are in μF, Unless Otherwise Noted
△ CERAMIC ◎ MYLAR ⊠ STYROL ▭ ADJ.
⊗ TANTALUM ELECTROLYTIC

RESISTORS
Are in Ohms, ¼ Watts, 1.5% Tolerance
Unless Otherwise Noted. K=kΩ
■ METAL FILM RESISTOR ⊠ NON-INFLAMMABLE RESISTOR

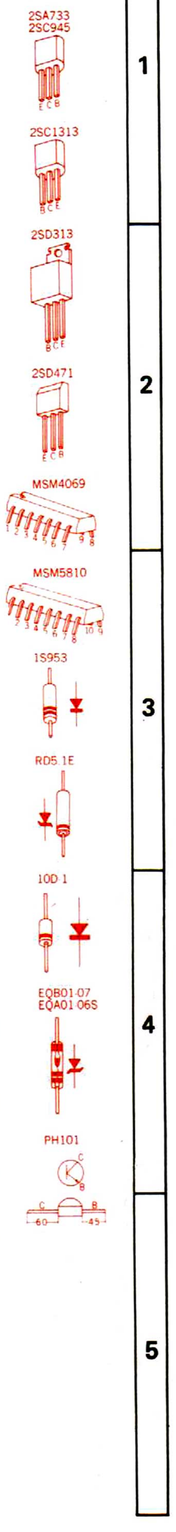

9. PACKING LIST

Parts No.	Stock No.	Description
1	9012310	Upper Sheet
2	7012161	Dust Cover Ass'y
3	9122110	Polyethylene Sheet
4	9012270	Protector Sheet, turntable
5	5502901	Rubber Mat. XX, UL (SR-5090, SR-7090) } SR-535, SR-737
	5502891	Rubber Mat. EU, CSA, BS } SR-535, SR-737
6	6112183	Turntable (Platter) (SR-535, SR-5090)
	6112191	Turntable (Platter) (SR-737, SR-7090)
7	9116600	Polyethylene Bag, turntable
8	9112250	Polyethylene Bag, turntable unit
9	9082071	Stylofoam Packing, front
10	9082081	Stylofoam Packing, back
11	9022630	Accessories Package
12	9082110	Plastic Cover Sheet
13	9002650	Carton Case (SR-535)
	9002730	Carton Case (SR-5090)
	9002670	Carton Case (SR-737)
	9002740	Carton Case (SR-7090)
14	5996080	Curl Stopper

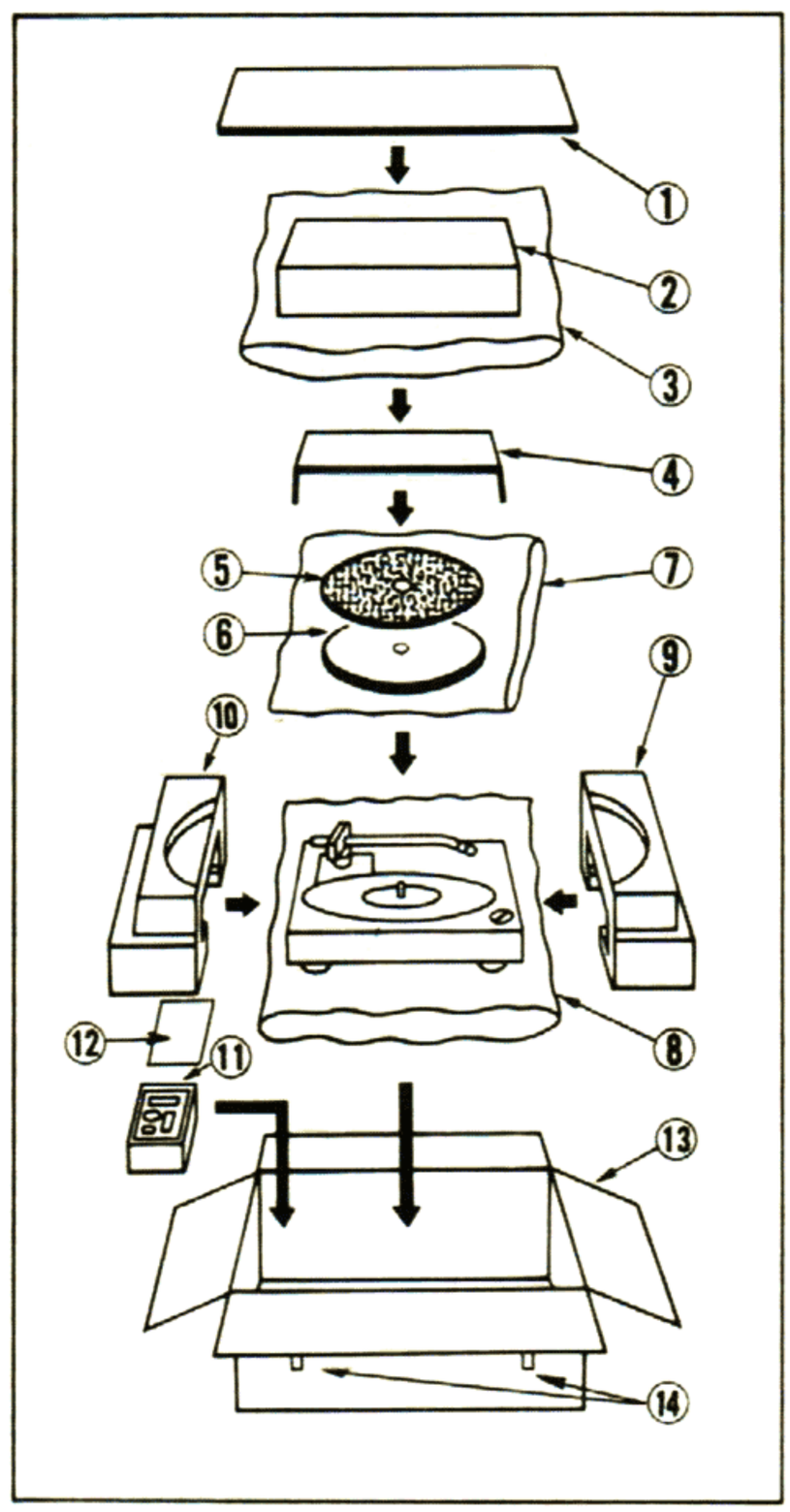

10. ACCESSORY PARTS LIST

Stock No.	Description
9203070	Operating Instruction (SR-535)
9203080	Operating Instruction (SR-5090)
9203090	Operating Instruction (SR-737)
9203100	Operating Instruction (SR-7090)
9232160	Schematic Diagram XX (SR-535)
9232190	Schematic Diagram (SR-5090)
9232170	Schematic Diagram XX (SR-737)
9232200	Schematic Diagram (SR-7090)
5242590	Cartridge Mounting Gauge

Sansui

SANSUI ELECTRONICS CORPORATION : 55-11 Queens Blvd. Woodside, N.Y. 11377 U.S.A.
333 West Alondra Blvd. Gardena, California 90247 U.S.A.
3036 Koapaka St. Honolulu, Hawaii 96819 U.S.A.
SANSUI AUDIO EUROPE N.W. : North Trade Bldg (9th floor) Noorderlaan 133-Bus 1,2030 Antwerp, Belgium
SANSUI AUDIO EUROPE S.A. : Ababella center, 6 Frankfurt AM Main, Lyoner Strasse 44-48, West Germany
SANSUI ELECTRIC COMPANY LTD. : 14-1, Izumi 2-chome, Suginamiku, Tokyo 168 Japan PHONE: (03) 323-1111/TELEX:232-2076

SM088

Printed in Japan (N78720M)