SERVICE MANUAL

STEREO CD MIDI SYSTEM

SANSUI R-500CD

P-R500 AUTO RETURN TURNTABLE
DA-R500 DOUBLE CASSETTE RECEIVER
CD-R500 COMPACT DISC PLAYER
S-U1 HI-FI SPEAKER SYSTEM

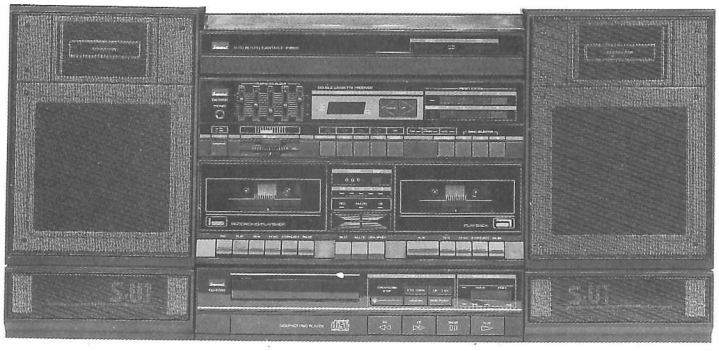

CAUTION

1. Parts identified by the ⚠ symbol on the schematic diagram and the parts list are critical for safety. Use only replacement parts that have critical characteristics recommended by the manufacturer.
2. Make leakage-current or resistance measurements to determine that exposed parts are acceptably insulated from the supply circuit before returning the appliance to the customer.

Sansui

SANSUI ELECTRIC CO., LTD.

NOTE

1. The symbols, UL, CSA, SA, BS, UK, EU, AS and XX on the parts list and the schematic diagram mean followings respectively.

   UL..... Manufactured for U.S.A. market.
   (Underwriters Laboratories approved model.)
   CSA..... Manufactured for Canadian market.
   SA..... Manufactured for South African market.
   BS, UK..... Manufactured for United Kingdom market.
   EU..... Manufactured for European market.
   AS..... Manufactured for Australian market.
   XX..... Standard Version.
   NON MARK..... Common Parts.

2. Some printed circuit boards are not supplied as the assembled. To separate these in this service manual, the stock No's are not indicated at the ends of the board names. However, the individual parts on the circuit boards are provided by orders.

AUTO RETURN TURNTABLE

SANSUI P-R500

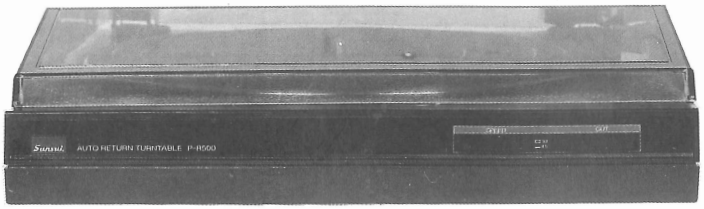

Specifications

Type ..... Belt drive system
Rated speeds ..... 33-1/3, 45 rpm
Platter ..... Plastic platter (diameter 290mm)
Motor ..... DC servo motor
Wow/flutter ..... 0.5% (WRMS)
Signal-to-noise ratio ..... Better than 72 dB (DIN-B)
Tonearm ..... Dynamically balanced straight arm
Effective tonearm length ... 211.4 mm
Power voltage ..... DC 12V
Power consumption 5W
Dimensions ..... 340 mm (13-1/4") W
91.5 mm (3-5/8") H
340 mm (13-1/4") D
Weight ..... 2 kg (4.4 lbs) net

Pick up

Type ..... Dual Magnet type
Output voltage ..... 2.5 mV (1,000 Hz, 50 mm/sec)
Correct load impedance .... 47 kohms
Frequency response ..... 20 - 20,000 Hz
Stylus ..... 0.6 mil diamond stylus (MG-1971 replacement stylus)

- Design and specifications subject to change without notice for improvements.

1. WIRING DIAGRAM

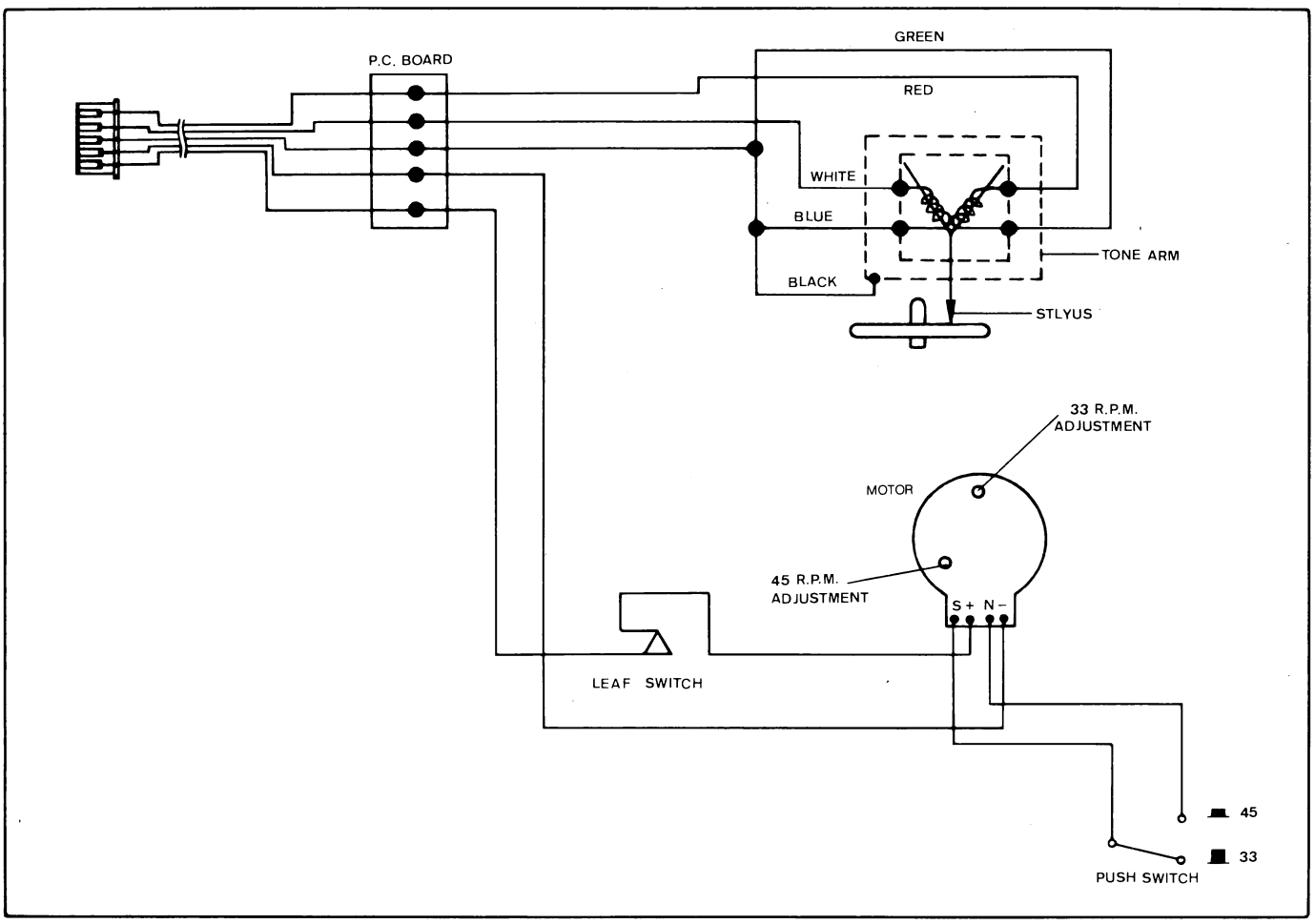

2. EXPLODED VIEW & PARTS LIST

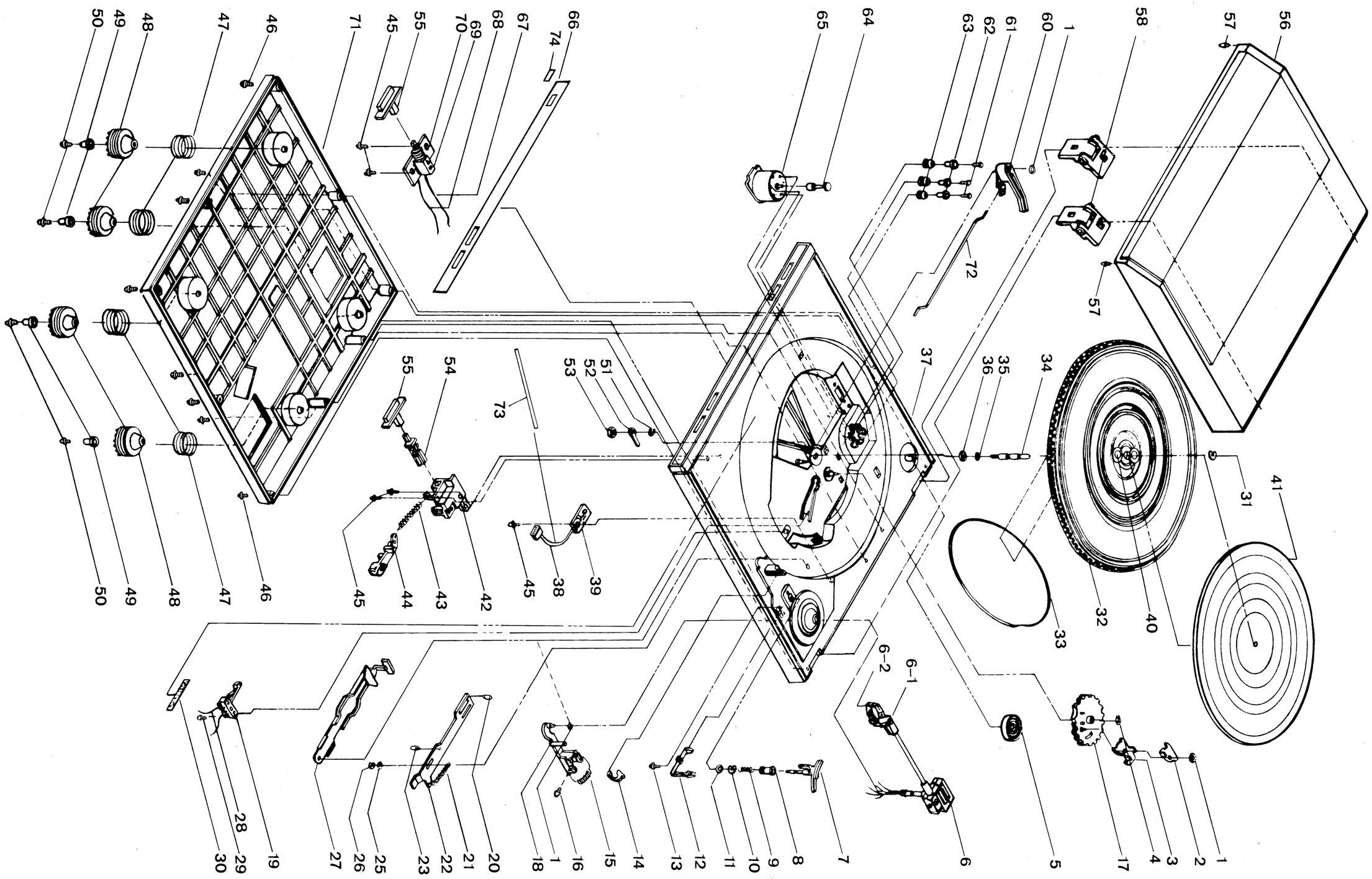

• Parts List < Exploded View >

No.	Stock No. (J)	Stock No. (T)	Description	Parts No.	Q'ty
1	58311900	MFC1031D07	3mm Ring	B73	3
2	58312000	MSB1611D00	Clutch Plate, Upper	SA123	1
3	58312100	MSB1612D07	Clutch Plate, Cower	SA121-01	1
4	58312200	MFC1032D04	4mm Ring	B74	1
5	58312300	MDK1383D08	45 rpm Adaptor	SK22	1
6	58312400	MDH1215D08	Tone Arm	PA11503	9
6-1	58312500	MTC1003D09	Head Sheel	SE3-02	1
6-2	58312600	MPS0001D09	Stylus	MG1971	1
7	58312700	MMR1048D07	Tone Arm Lifter	SA38-02	1
8	58312800	MDK1381D04	Anti-Skating Knob	SPB131	1
9	58312900	MMS1064D04	Spring	SA133-801	1
10	58313000	MFC1033D01	4mm E Ring	E74	1
11	58313100	MFW1082D02	Washer	CP27-1	1
12	58313200	MSB1613D04	Lever, Cueing	SP133-48	1
13	58313300	MFS1083D05	Screw	3.5×11 BTV	1
14	58313400	MSB1614D01	Arm Clip	SPB36-1	1
15	58313500	MMS1065D01	Spring	SA24-1	1
16	58313600	5210320HO2	Screw	3×20 RB	1
17	58313700	MSB1615D08	Spur, Gear	SA120	1
18	58313800	MSB1616D05	Link, Return	SA24-01	1
19	58313900	GWL0937D00	Switch	SK60-1B	1
20	58314000	MSS1071D08	Stud	SA112A	1
21	58314000	MMS1066D08	Spring	SA110-2-01	1
22	58314200	MSB1617D02	Lever, Return	SP111A	1
23	58314300	MSS1072D05	Cam Stud	SM113-1	1
24					
25	58314500	MFW1083D09	Washer	SE108-2	1
26	58314600	MFC1034D08	3mm E Ring	E73	1
27	58314700	MSB1618D09	Slide Plate, Return	SE108	1
28					
29	58314400	5210208HO3	Screw	2×8 RA	1
30					
31	58314800	MFC1035D05	6mm E Ring,	E76	1
32	58314900	MSB1619D06	Turntable Platter	SA52-01	1
33	58315000	MPF1377D08	Belt	SA70	1
34	58315100	MSB1620D04	Spindle	SB55	1
35	58315200	MFW1084D06	Poly Washer	SA56-1	1
36	58315300	MFW1085D03	Oil Cup	SA55-1	1
37	58311800	MDS1313D02	Cabinet	SE302	1
38	58315400	MEJ1281F09	Connector	IC25057	1
39	58315500	MEJ1284D04	Pcb-Output	ST32-1A	1
40	58315600	MSB1621D01	Rubber Cap	MK302-1	1
41	58315700	MPF1373D00	Rubber Mat	SA51-02	1
42	58315800	MSB1622D08	Reject (Plastic)	MK107-2	1
43	58316000	MMS1067D05	Spring	MK64	1
44	58315900	MSB1623D05	Reject (Plastic)	MK107-3	1
45	58316100	5210308HO6	Screw	3×8 RB	5
46	58316200	5210310HO1	Screw	3×10 RB	9
47	58311400	MMS1056D07	Spring, Stand	SE306-2	4
48	58311500	MPF1368D04	Rubber, Stand	ST306	4
49	58311600	MPF1369D01	Collar, Stand	STB306-4	4
50	58311700	5270318IO6	Screw	3×18TA	4
51	58316300	MFW1086D00	Spring Washer	5/32	1
52	58316500	MSB1624D02	Cug	SM26-1	1
53	58316400	MFN1017D09	Nut	KØ4	1
54	58316600	MSB1625D09	Reject (Plastic)	MK107-1	1
55	58316700	MDK1382D01	Knob, Reject	SE106-01	2
56	58311000	MSH1055D00	Dust Cover	SE301	1
57	58311100	MCF1014D00	Cushion-Dust Cover	CL301-2B	1
58	58311200	MSB1609D05	Hinge	SE304	1
59					
60	58316800	MSB1626D06	Wiper, Reject	SKB109-2	1
61	58316900	MFS1084D02	Screw	2.6×11 R1	1
62	58317000	MSB1627D03	Cushion, Motor	SA93-1	1
63	58317100	MMS1068D02	Collar	SA93	1
64	58317200	MMP1051D07	Pulley, Motor	CK95	1
65	58317300	MTP0005D02	Motor	SA100-01	1
66	58317400	MDS1221D05	P.V.C. Plate (Function Lens)	SE29-5011	1
67					
68					
69	58317500	GWP0938D01	Mini Push Switch	CKB61	1
70	58317600	GPA0003D03	P.C. Board	VR50315-1	1
71	58311300	MSB1610D03	Base Case	SE303	1
72	58317700	MMS1069D09	Spring	SE110	1
73					
74	58310900	MDT1323D03	"SANSUI" Mark Plate		1

3. OTHER PARTS

Front View

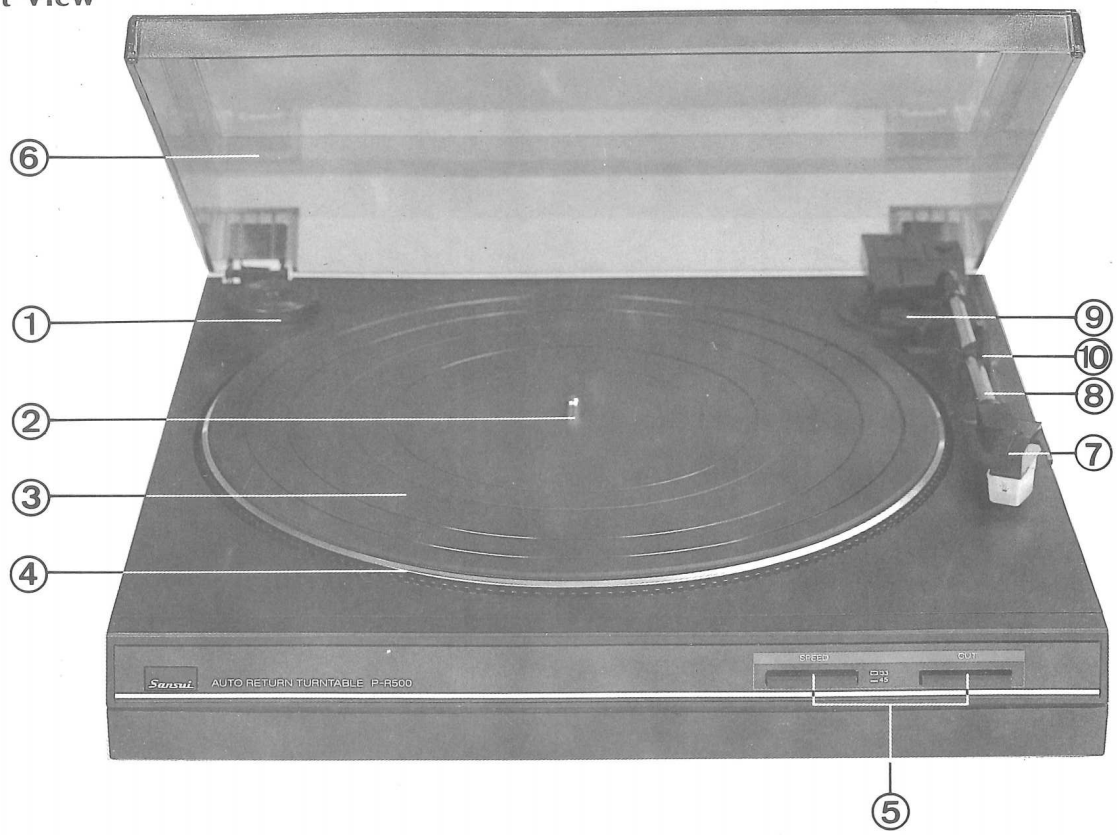

Top View

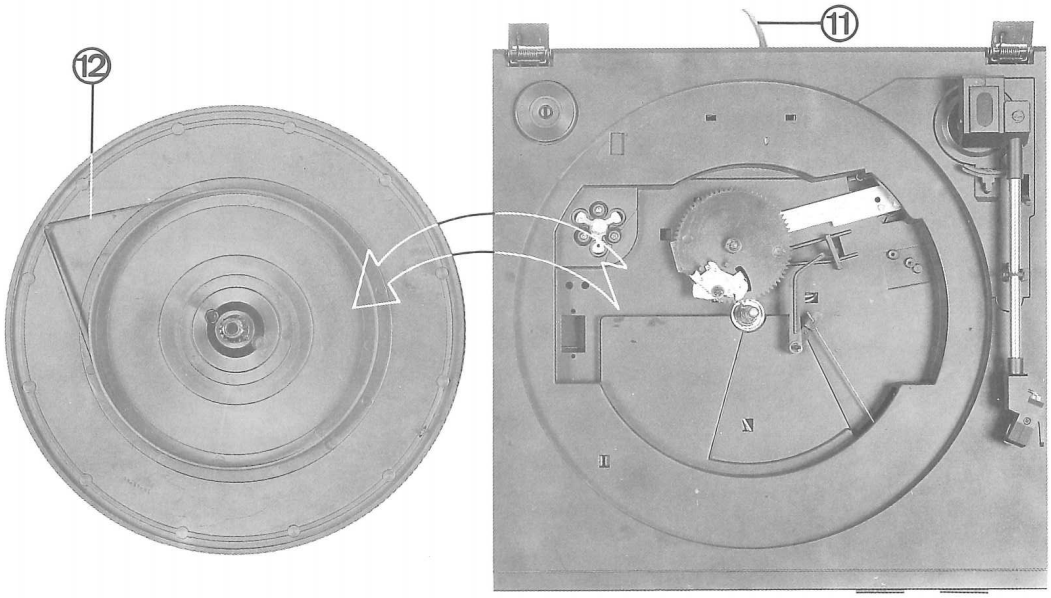

No.	Stock No. (J)	Stock No. (T)	Description
1	58312300	MDK1383D08	45 Rpm
2	58315100	MSB1620D04	Spindle
3	58315700	MPF1373D00	Rubber Mat
4	58314900	MSB1619D06	Turntable Platter
5	58316700	MDK1382D01	Knob Reject
6	58311000	MSH1055D00	Dust Cover
7	58312500	MTC1003D09	Head Shell
8	58312400	MDH1215D08	Tone Arm
9	58312700	MMR1048D07	Tone Arm Elevator
10	58313200	MSB1613D04	Lever, Cueing
11	58315400	MET1281F09	Connector
12	58315000	MPF1377D08	Belt

4. PACKING LIST

No.	Stock No. (J)	Stock No. (T)	Description
1	58310300	MPW1084D09	Poly Bag For Set
2	58310500	MPP1266D08	Styrofoam Packing for set
3	58310200	MPC1471D06	Carton Case
4	58310400	MDL2326D01	Instruction Book

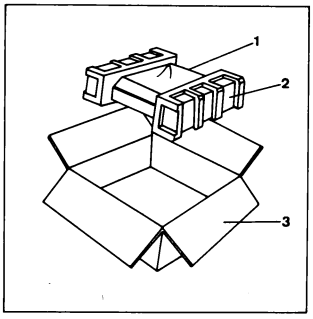

DOUBLE CASSETTE RECEIVER

SANSUI DA-R500

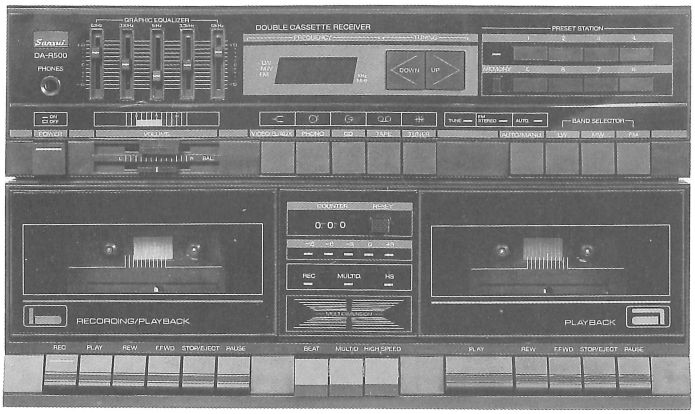

Specifications

Audio section

Power output
Min. RMS, both channels driven from 35 to 20,000 Hz with no more than 0.5% total harmonic distortion
20 watters per channel into 4 ohms
Total harmonic distortion.. less than 0.5% at or below rated min. RMS power output
Load impedance..... 4-8 ohms
Input sensitivity and Impedance (1 kHz)
PHONO..... 2.5 mV/47 kohms
VIDEO S./AUX..... 150 mV/47 kohms
CD..... 500 mV/47 kohms
Frequency response (at 1 watt)
..... 20 to 20,000 Hz, +3 dB, −3 dB
Signal to noise ratio (short-circuit, A-network)
PHONO..... 72 dB
CD/VIDEO S./AUX..... 90 dB

FM section

Tuning range..... 88 to 108 MHz
Usable sensitivity
Mono IHF..... 10.8 dBf (1.9 μV: T-100)
DIN..... 0.9μV
50 dB quieting sensitivity
Stereo..... 37 dBf
Signal to noise ratio (at 65 dBf)
Stereo..... 60 dB
Distortion (at 65 dBf)
Stereo..... less than 0.35% at 1,000 Hz
Stereo separation..... 40 dB at 1,000 Hz

AM section

Tuning range..... 520 to 1,710 kHz
Units with MW, LW switch
MW..... 522 to 1611 kHz
LW..... 153 to 360 kHz
Usable senitivity (Loop antenna)
..... 58 dB/m
Signal to noise ratio..... 45 dB

Tape section

Track format..... 4-track 2-channel system
Wow/flutter..... 0.35% max (WRMS)
Signal to noise ratio
..... Better than 50 dB
Frequency-response (−20 VU recording/playback)
Normal Tape (LH)..... 125 to 10,000 Hz ± 3dB
Power requipment..... AC 110～120V/220V～240V (50/60 Hz)
for U.S.A. (UL)..... AC 120V (60 Hz)
UK (BS)..... AC 240V (50 Hz)
220V area..... AC 220V (50/60 Hz)
Power consumption..... 140 watts
Dimensions..... 340 mm (13-1/4″) W
345 mm (13-5/8″) D
210 mm (8-1/4″) H
Weight..... 7.2 kg (15.8 lbs) net
8.2 kg (18.0 lbs) packed

- Design and specifications subject to changes without notice for improvements.

1. BLOCK DIAGRAM

1-1. Tuner Section

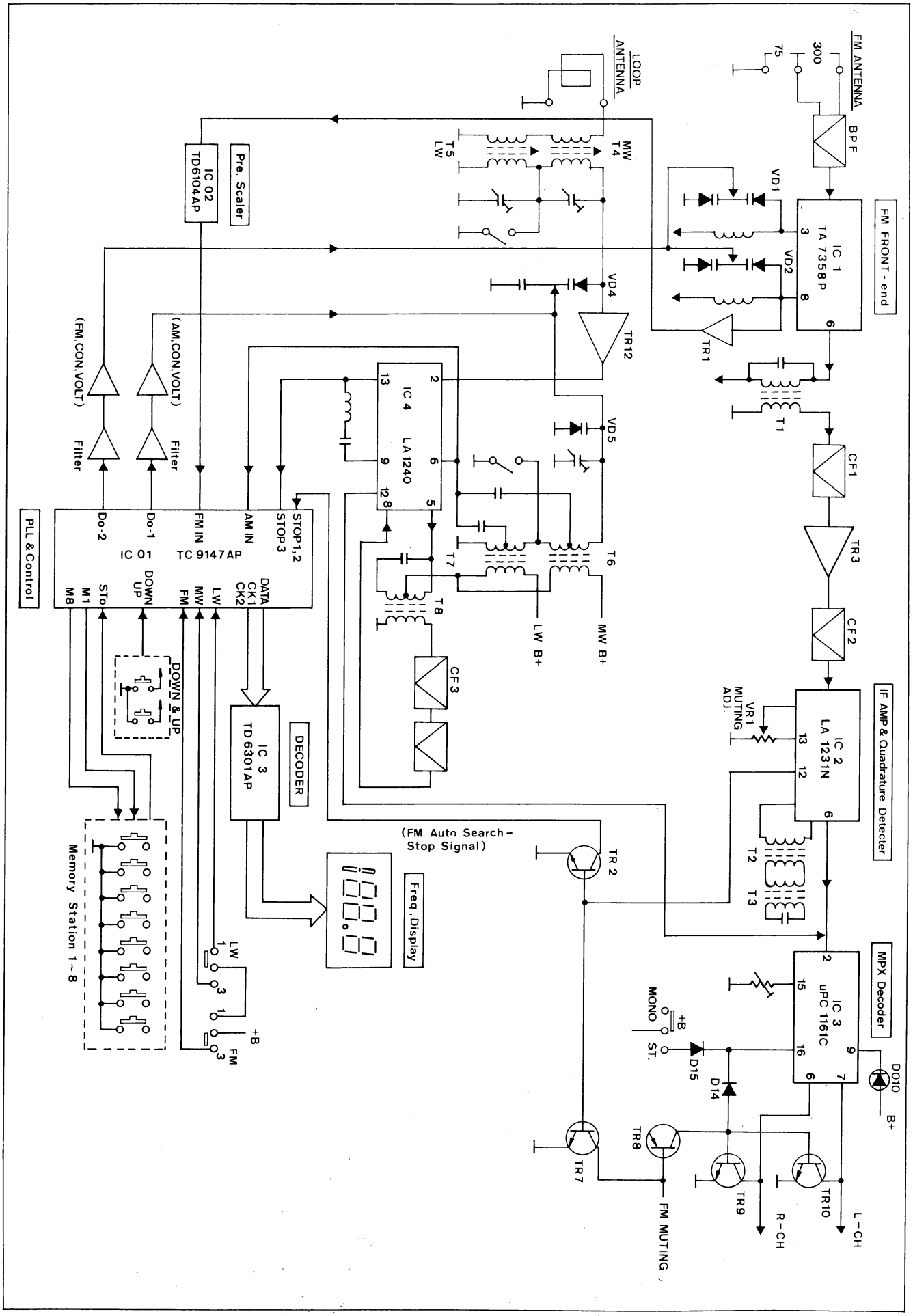

1-2. Cassette Deck REC/P.B Amp. & Audio Amp. Section

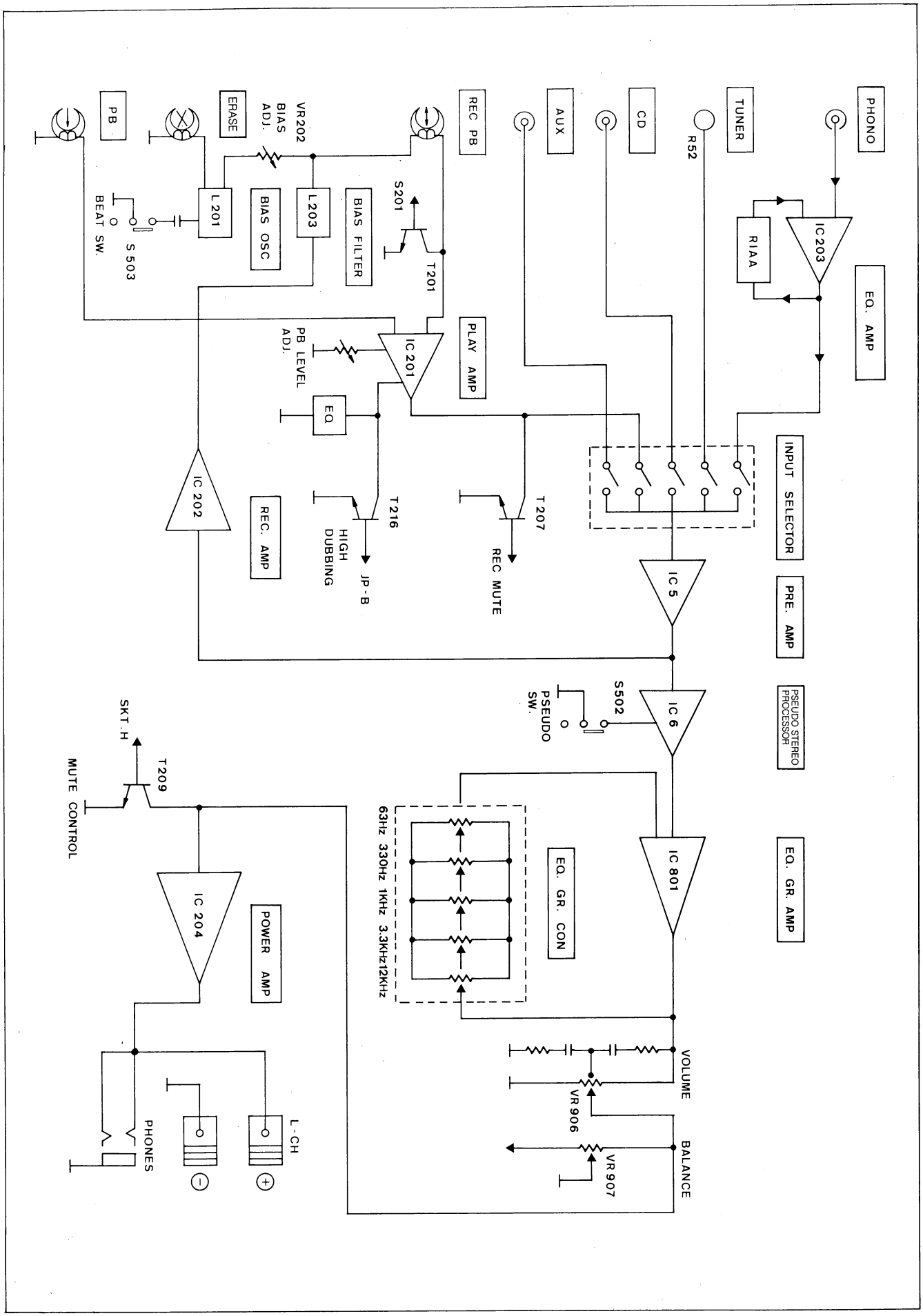

2. INTERIOR BLOCK DIAGRAM OF IC

- **TA7784P (Pre.-Amp. IC)**

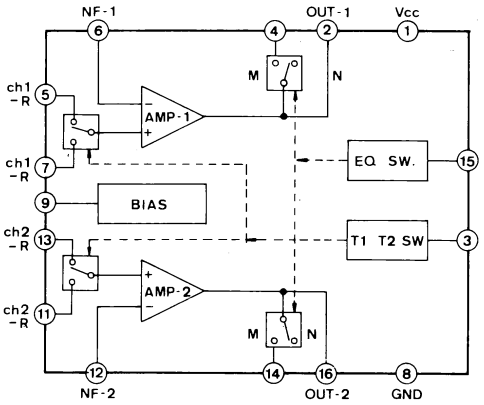

- **LA1231N (IF & Quadrature Detector IC)**

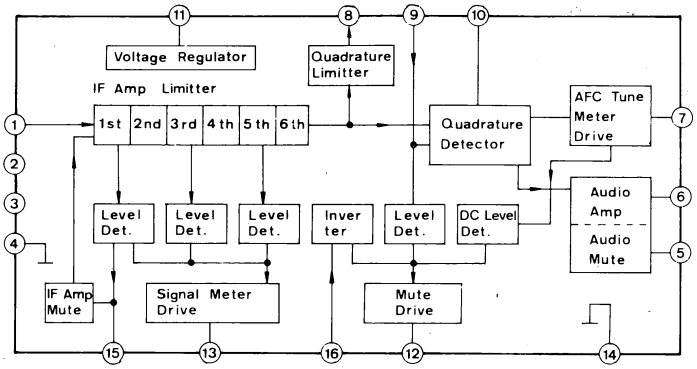

- **LA3220 (ALC & 2 Channel Equalizer Amp. IC)**

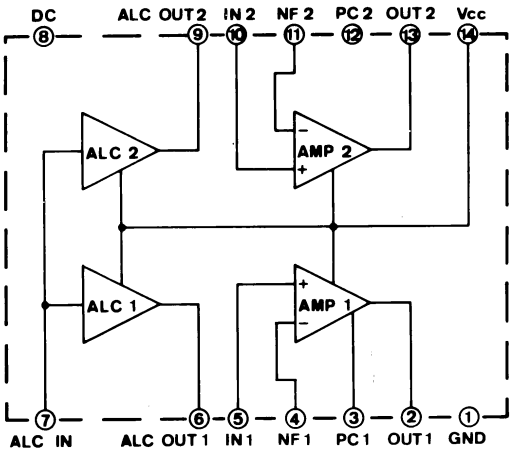

- **TD6301AP (Frequency Display IC)**

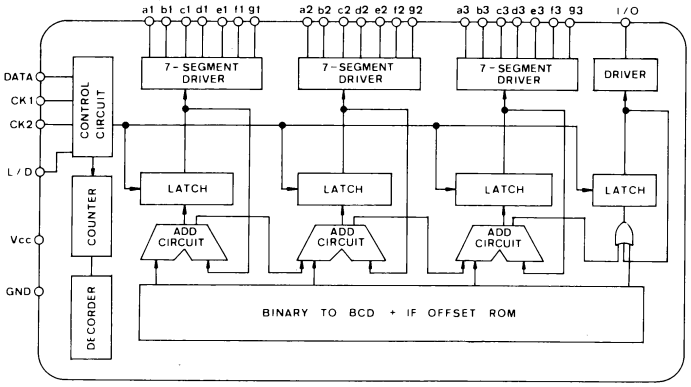

- **LA1240 (AM Tuner IC)**

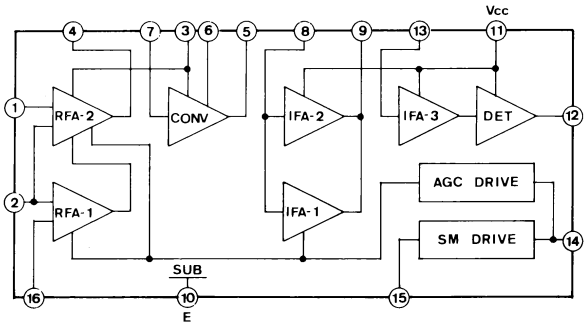

- **LB1403 (Level Meter IC)**

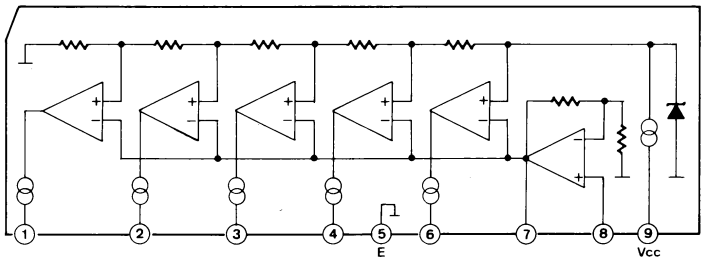

- **LA6458DS (Dual Operational Amp. IC)**

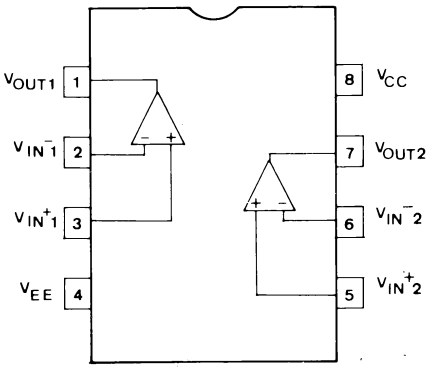

- **TA7358P (FM Front-End IC)**

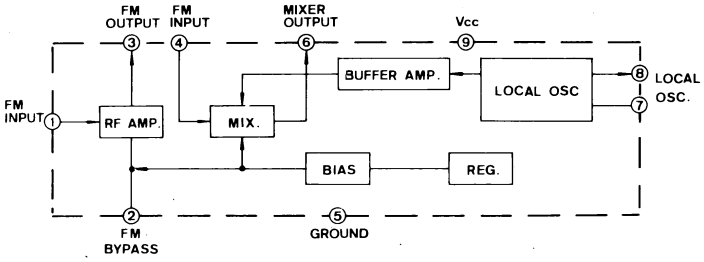

• TC9147AP (PLL IC)

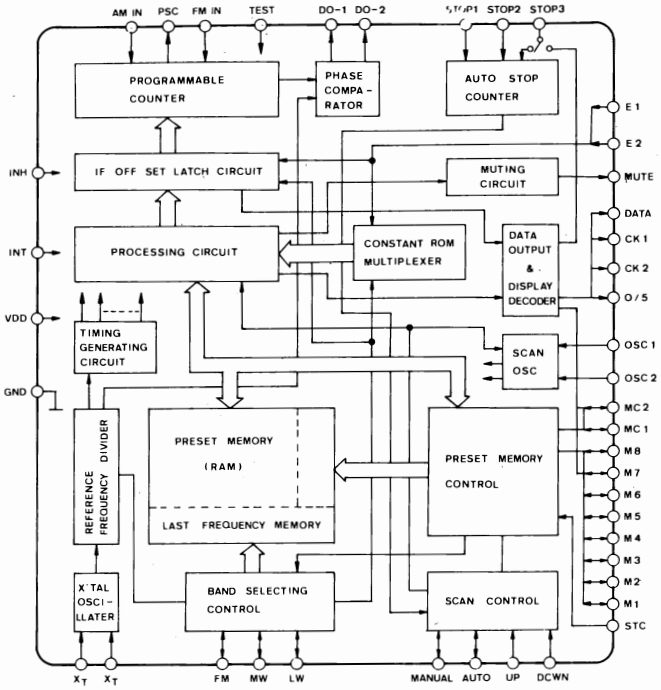

• μPC1161C (MPX. IC)

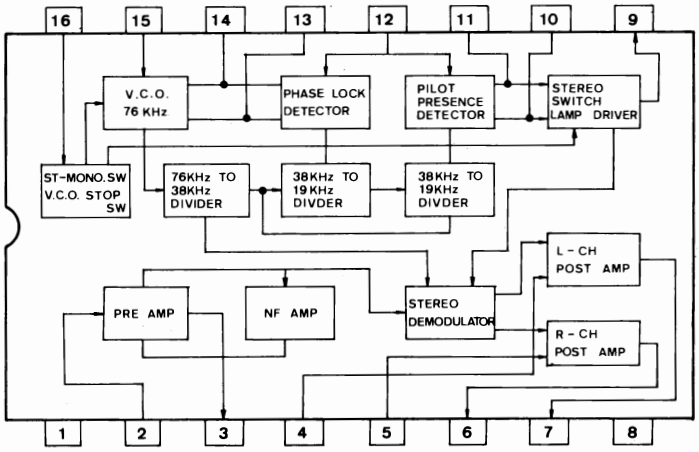

• TD6104P (Prescaler IC)

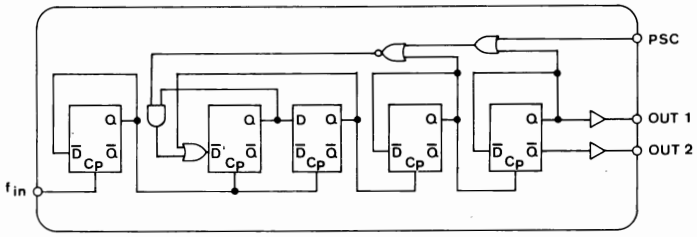

• TDA3810 (Presudo Stereo Processor IC)

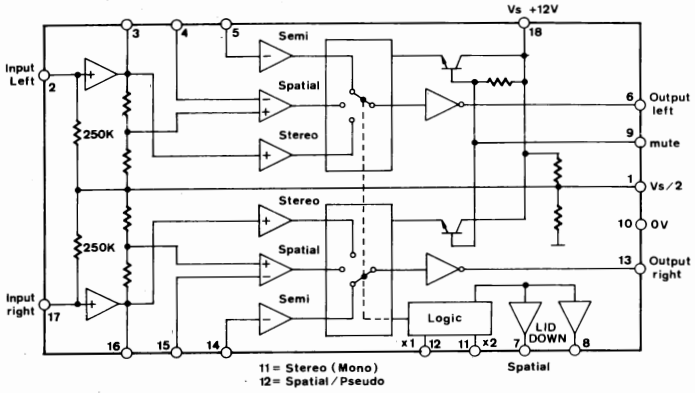

• BA3812L (Equalizer IC)

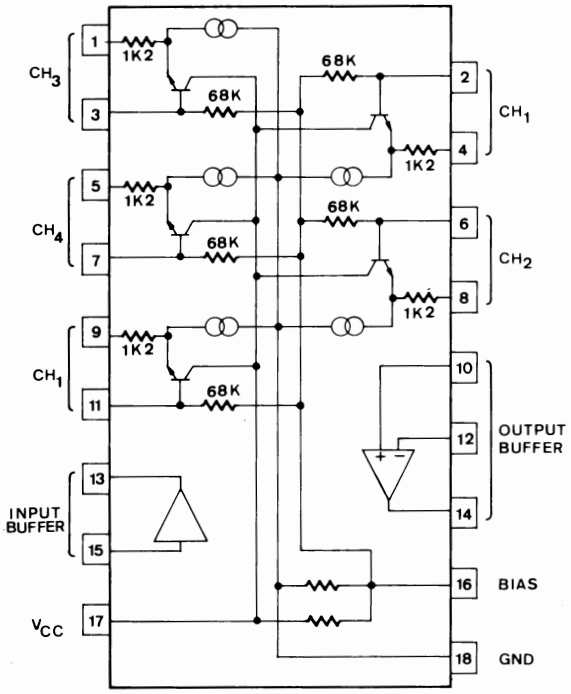

• STK4131II (Power Amp. IC)

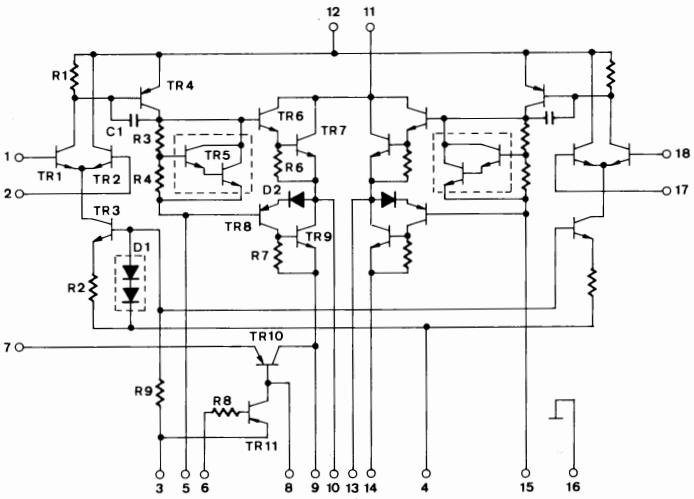

3. ADJUSTMENTS

3-1. AM And FM Section Adjustment

Note: Test points and adjustment parts are shown in Fig.3-1.

AM - alignment

	step	connect to	frequency	points of alignment
IF	1	Connect AM loop antenna to ant. terminal and common oscilloscope to TP 8 D.C voltage meter to TP 6	450 KHz	T 8
	2			T 9
	3		repeat alignment 1 & 2	
MW	4		522 KHz	T 6 TP6 for 0.8V
	5		1611 KHz	TC 5 TP6 for 8.0V
	6		repeat alignment 4 & 5	
	7		603 KHz	T 4
	8		1404 KHz	TC 4
LW	9		repeat alignment 7 & 8	
	10		153 KHz	T 7 TP6 for 0.8V
	11		360 KHz	TC 6 TP6 ofr 8.0V
	12		repeat alignment 10 & 11	
	13		175 KHz	T 5
	14		350 KHz	TC 3
	15		repeat alignment 13 & 14	

FM - alignment

	step	connect to	frequency	points of alignment
IF	1	Sweep gen. VIA 10pF to TP 1 and common oscilloscope to TP 5 D.C voltage meter to TP 7 Signla gen. to TP 9.	10.7 MHz	T 1
	2			T2, T3 s - curve
	3		repeat alignment 1 & 2 until s-curve is symmetrical	
RF	4		87.5 MHz	TP7 for 1.3V
	5		108 MHz	L 2 TP7 for 6.0V
	6		repeat alignment 4 & 5	
	7		90 MHz	L 1
	8		106 MHz	TC 1
	9		repeat alignment 7 & 8	

MULTIPLEX ALIGNMENT
1. CONNECT "RF OUT" CABLE OF FM-STEREO-GENERATOR 20uV 1 KHz TO ANT. TERMINALS OF RECEIVER AND TURN RECEIVER TO 98 MHz.
2. ADJUST THE MUTE ON WITH VR 1.

MULTIPLEX ALIGNMENT:
GENERAL ALIGNMENT CONDITIONS:
CONNECT "RF OUT" CABLE OF FM - STEREO GENERATOR TO ANT. TERMINALS OF RECEIVER AND TUNE RECEIVER TO 98 MHz
RF - INPUT VOLTAGE SHOULD BE SET SO THAT THE IF AMPIFIER IS LIMITING.
ADJUST THE FREQUENCY 19 KHz OF TP 4 WITH VR 2.

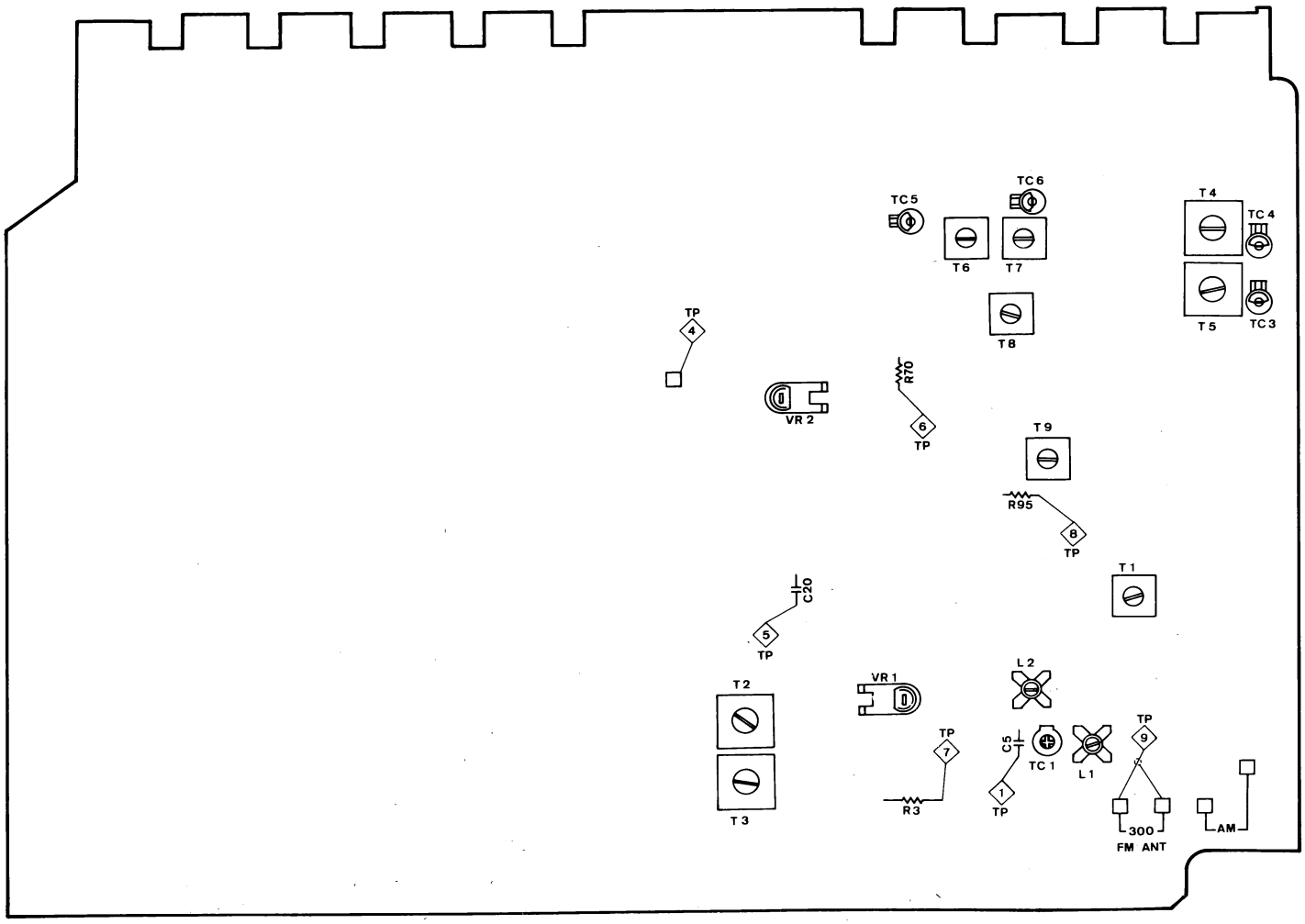

Fig.3-1 GTB1351D12 (FM/LW, 3-bands) or GTB1340D03 (FM/AM, 2-bands) P.C. Board

3-2. Cassette Electrical Adjustment
Note: Adjustment parts are shown Fig. 3-7.

Step	Adjustment Item	Test Tape Supply Signal	Mode	Adjustment Point	Result	Remarks
1	DECK A High Speed	3 KHz -10dB Test Tape	DECK A : Play H.S.D SW: ON	VR 207	6040 Hz	S202 Turn to left while adjust speed See Fig 3-3 & 3-7
2	DECK A Norm. Speed	3 KHz -10dB Test Tape	DECK A : Play H.S.D SW: OFF	VR 206	3020 Hz	"
3	DECK B High Speed	3 KHz -10dB Test Tape	DECK B : Play H.S.D SW: ON	VR 205	6000 Hz	"
4	DECK B Norm. Speed	3 KHz -10dB Test Tape	DECK B : Play H.S.D.SW: OFF	VR 204	3000 Hz	"
5	Rec Bias Frequency	Blank Tape	REC / PAUSE	L 201	Normal: 85 KHz Beat: 74 KHz	See Figs 3-4 & 3-7
6	Rec Bias Current	Blank Tape	REC / PAUSE	VR2 (Rch) L202(Rch) VR3 (Lch) L203(Lch)	Normal : 4.0mV Beat : 4.0mV	See Figs 3-5 & 3-7
7	DECK A Level(Rch)	1 KHz 0dB Test Tape	PLAY	VR 201	Output Levels of Rch and Lch Are Equal.	See Figs 3-6 & 3-7

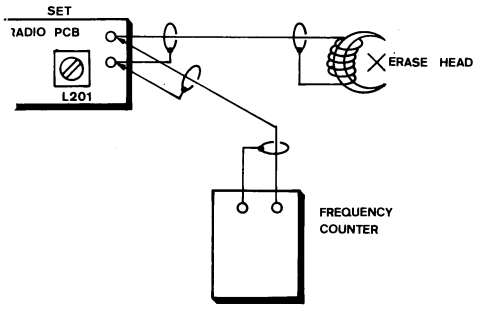

Fig. 3-4 REC Bias Frequency Adjustment

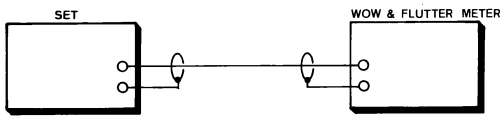

Fig. 3-3 Tape Speed Adjustment

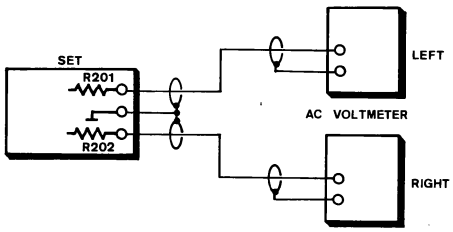

Fig. 3-5 REC Bias Current Adjustment

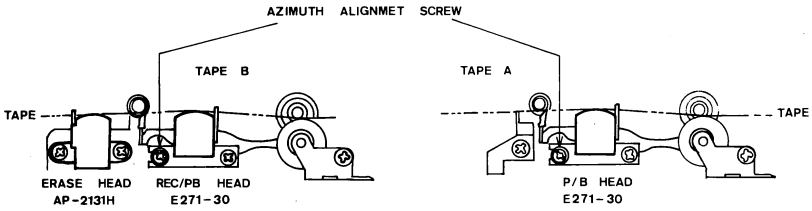

Fig. 3-1 Head Adjustment

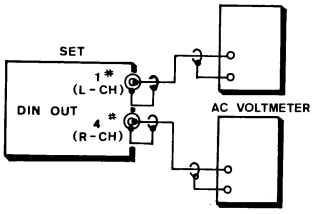

Fig. 3-6 PB Level Adjustment

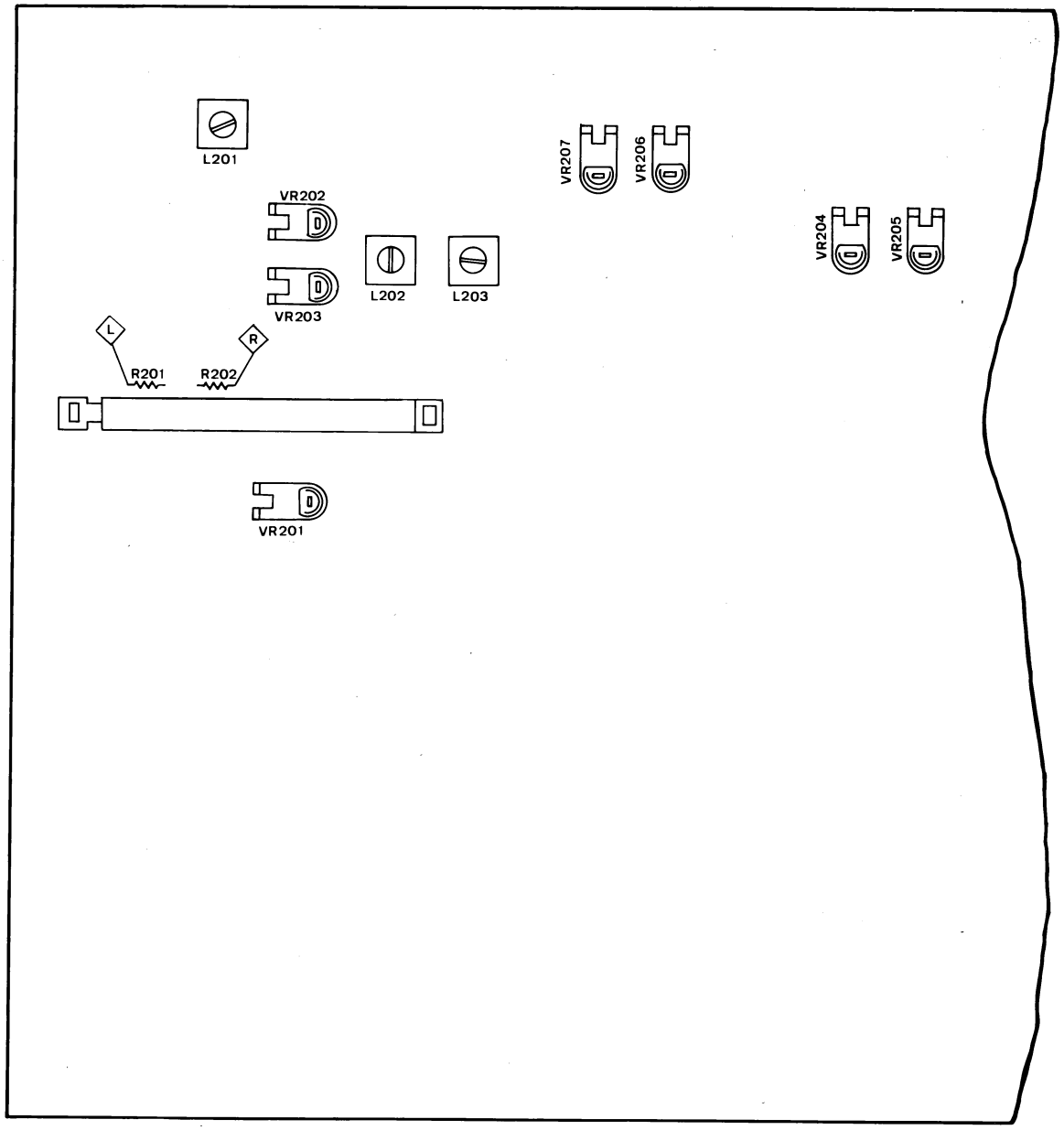

Fig. 3-7 GPB1337D12 Cassette Deck REC/P.B. Amp. & Audio Amp. P.C. Board

4. PARTS LOCATION & PARTS LIST

4-1. GPB1335D07 LED Indicator P.C. Board (Stock No. 58332300)

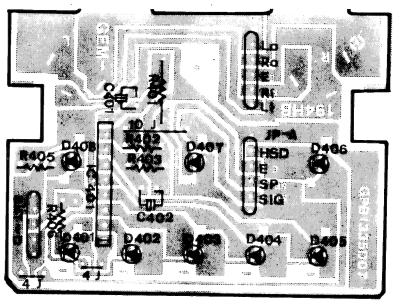

• Component Side

• Parts List

Parts No.	Stock No. (J)	Stock No. (T)	Description
IC			
IC401	58334800	EIC0014036	LB 1403
D401,402,407,	58332500	GLD0152553	L.E.D. Green
D403,406	58332600	GLD0162451	L.E.D. Yellow
D404,405,408,	58332400	GLD0142253	L.E.D. Red
C401,402	48459800	ECE107C601	Elect Cap 10μF/16V
R401	00224900	ERJ1030415	Resistor 1K ohm 1/4W
R402,403	46479800	ERJ1040612	Resistor 10K ohm 1/6W
R405	46476500	ERJ3920611	Resistor 390 ohm 1/6W

4-2. GPB1334D00 High-Speed Switch P.C. Board (Stock No. 58332200)

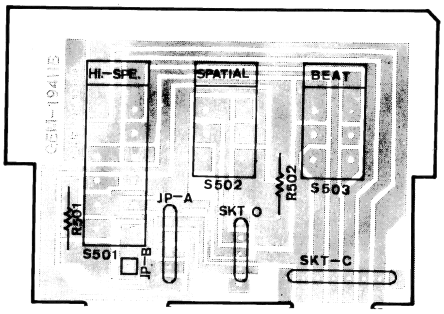

• Component Side

• Parts List

Parts No.	Stock No. (J)	Stock No. (T)	Description
R501,502	00235700	ERJ4720416	470 ohm 1/4W
S501,502,503	58327900	GWP0918D09	Function Switch

4-3. GPB1344D01 Freq. Display P.C. Board (Stock No. 58336700)

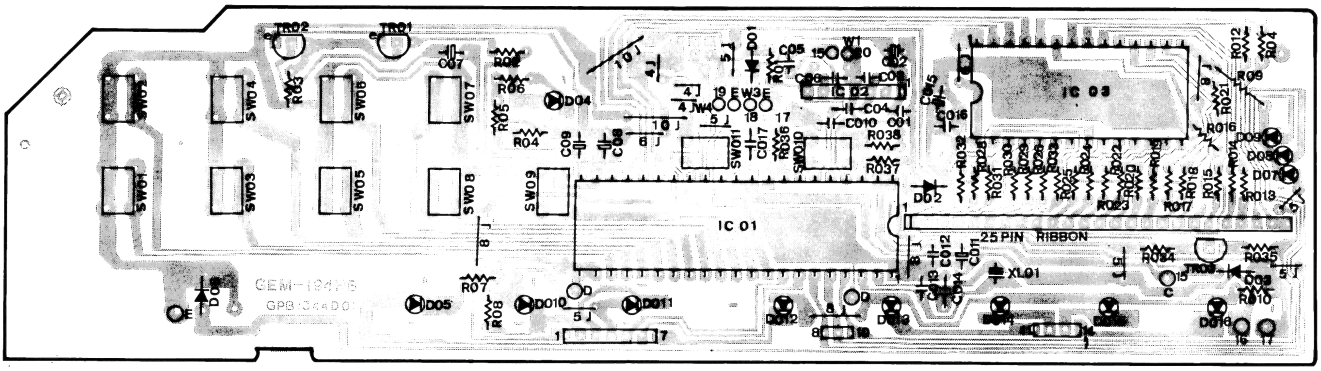

• Component Side

• Parts List

Parts No.	Stock No. (J)	Stock No. (T)	Description
IC			
IC01	58336900	EIC9147AP3	TC 9147AP
IC02	58337000	EIC0061041	TD 6104AP
IC03	46410100	EIC0063012	TD 6301AP
Transistor			
TR01, 02, 03	07194801	ESC1815G56	2SC 1815GR
Diode			
D01,02,03, 06	58335500	EDS4148124	IN 4148
LED			
D04, 010	58332400	GLD0142253	L.E.D. Red
D05	58332500	GLD0152553	L.E.D. Green
D011	58332600	GLD0162451	L.E.D. Yellow

• **Parts List < GPB1344D01 >**

Parts No.	Stock No. (J)	Stock No. (T)	Description
D012, 013, 014, 015, 016	58337200	GLD0371521	L.E.D. Green 5 Ø
C08	48463300	ECE105F105	Elect Cap 0.1μF/50V
C09	48463900	ECE106F106	Elect Cap 1μF/50V
C07	48464000	ECE226F109	Elect Cap 2.2μF/50V
C02, 015	48458900	ECE108B306	Elect Cap 100μF/10V
C011	48458400	ECE479ATB4	Elect Cap 4700μF/6.3V (H.V)
C013	00382500	ECC221PF04	Ceramic Cap 22pF N150 ± 10%
C014	00382900	ECC271PF09	Ceramic Cap 27pF N150 ± 10%
C03	00383200	ECC331PF04	Ceramic Cap 33pF N150 ± 10%
C04, 05, 010, 017	58337400	ECC104LFK8	Ceramic Cap 103 (SR) ± 20%
C01, 06, 012, 016	00382800	ECC224FF04	Ceramic Cap 223 + 80% − 20%
R09	00233200	ERJ3320417	Resistor 330 ohm 1/4W
R011	46475600	ERJ1620618	Resistor 160 1/6W
R010	46475900	ERJ2220613	Resistor 220 1/6W
R07	46476100	ERJ2720618	Resistor 270 1/6W
R06,012,013, 014,015,016, 017,018,019, 020,021,022, 023,024,025, 026,028,029, 030,031,032, 033,034,	46476300	ERJ3320613	Resistor 330 1/6W
R08	46478200	ERJ2230614	Resistor 2.2K 1/6W
R01	46479000	ERJ4730613	Resistor 4.7K 1/6W
R02,03,035, 036	46479800	ERJ1040612	Resistor 10K 1/6W
R04	46481000	ERJ3340615	Resistor 33K 1/6W
R05	46482000	ERJ8240617	Resistor 82K 1/6W
R038	46482200	ERJ1050613	Resistor 100K 1/6W
R05	46482400	ERJ1250619	Resistor 120K 1/6W
R037	46484400	ERJ8250618	Resistor 820K 1/6W
SW01,02,03, 04,05,06,07, 08,09,010,011	58336800	GWP0912D07	Momentary Switch
XL01	58327700	ECF0723771	7.2MHz Crystal

4-4. GPB1351D12 Tuner P.C. Board. FM/MW/LW, 3 bands (Stock No. 58345400)

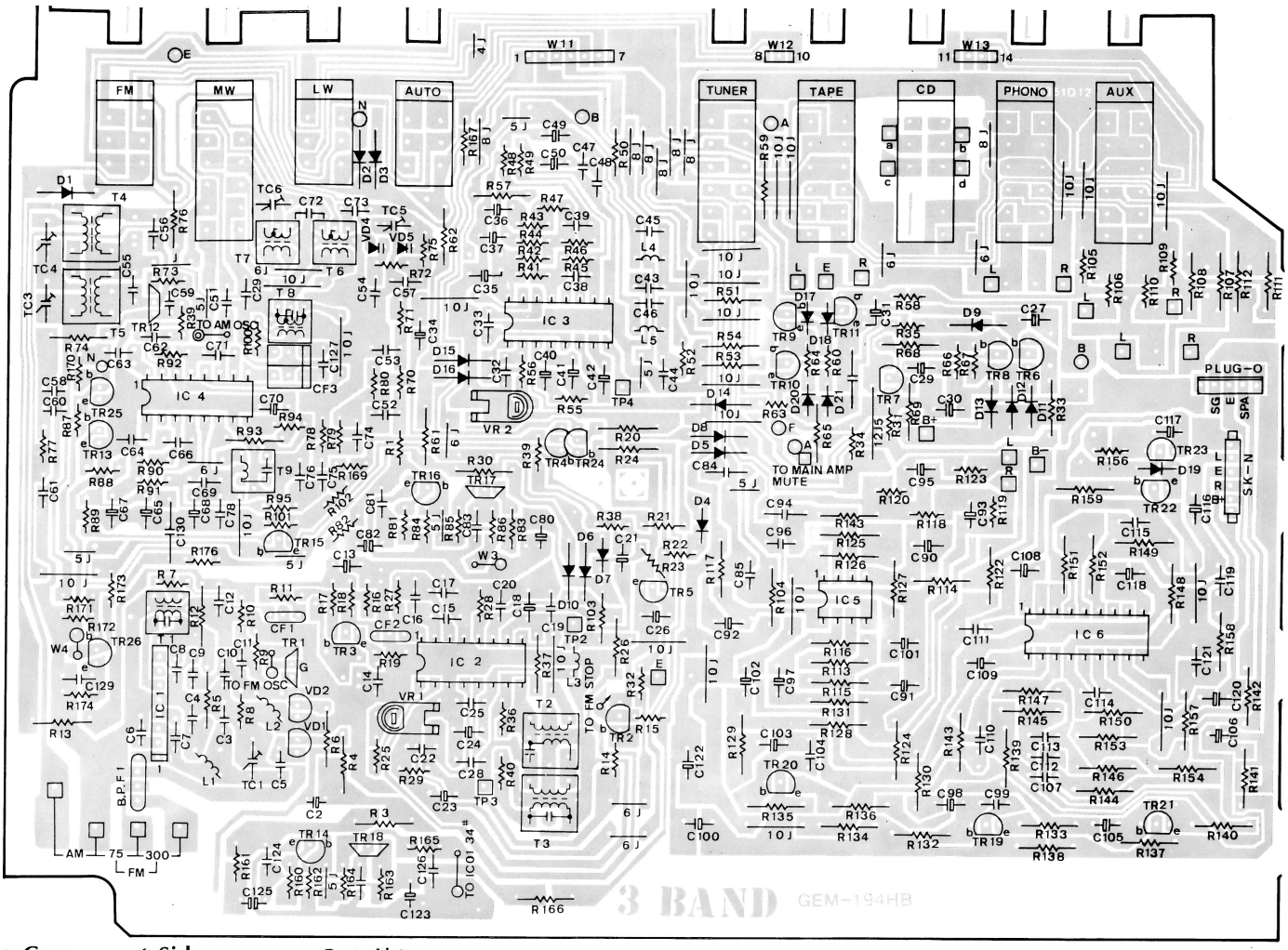

• **Component Side**

• **Parts List**

Parts No.	Stock No. (J)	Stock No. (T)	Description
IC			
IC1	58333500	EIC0073585	TA 7358P
IC2	03612300	EIC0012319	LA 1231N
IC3	58333600	EIC1161C39	uPC 1161C
IC4	03608000	EIC0012401	LA 1240
IC5	58333700	EIC6458DX8	LA 6458D
IC6	58333800	EIC0038106	TDA 3810
Transistor			
TR19,20,21	46078601	ESC0732G57	2SC 732GR
TR6,8	58335110	ESC1015G52	2SC 1015GR
TR2,4,5,7,11, 13,14,15,16,25	07194801	ESC1815G56	2SC 1815GR
TR3,26	07273601	ESC1923R52	2SC 1923R
TR9,10	58335200	ESC2120Y51	2SC 2120Y
TR17,18	03703400	ESK0163D26	2SK 163
TR1,12	46898202	ESK0212E75	2SK 212E
TR24	58331200	ESCA950Y51	2SA 950Y
T1	58334300	ETF0103092	FM I.F.T.
T2	58347600	ETD0116106	FM I.F.T.
T3	58347700	ETD0126107	FM I.F.T.
T4	58334200	ETE0010102	MW RF Coil
T5	58336400	ETE0025108	LW RF Coil
T6	58333900	ETA0362070	MW OSC Coil
T7	58336500	ETG0011075	LW OSC Coil
T8	58334100	ETM0759073	AM I.F.T.
T9	58334000	ETM0760071	AM I.F.T.
VR1	58333100	ERH104A018	Semi-VR 10K ohm
VR2	58333000	ERH503A015	Semi-VR 5K ohm
L1,2	58334700	ELL0051D00	FM OSC/RF Coil
L3	58335000	ETL022UH17	Chock Coil 22μH
L4,5	58334900	ETL040MH11	Chock Coil 40mH

• **Parts List < GPB1351D12 >**

Parts No.	Stock No. (J)	Stock No. (T)	Description		
Diode					
VD1,2	58335400	EDV1310019	KV 1310		
VD4,5	58335300	EDV1236010	KV 1236Z		
D1,2,3,4,5,6,7, 8,9,10,11,12, 13,14,15,16, 17,18,20,21	58335500	EDS4148124	IN 4148		
CF1,2	58333300	ECF1071815	FM 10.7 MHz Ceramic Filter		
CF3	58333400	ECF450A216	AM 450A Ceramic Filter (Double)		
BPF1	58333200	ECF8810848	FM Band Pass Filter		
TC5,6	58332900	ECT0101420	Trimmer 10pF Yellow		
TC1,3,4	58332800	ECT0301220	Trimmer 30pF Red		
C7	00384100	ECC500IF02	Ceramic AP	5pF	±10%
C3,56	00381200	ECC101PF01	Ceramic AP	10 N150	±10%
C9	58335700	ECC301PF05	Ceramic AP	30 N150	±10%
C127	00383700	ECC471IF07	Ceramic AP	47pF	±10%
C11,20,83,85, 96,126	00381300	ECC102IF06	Ceramic AP	100	±10%
C99,104	00382600	ECC222IF09	Ceramic AP	220	±10%
C4,5,6,8,63, 76,81,124	00381400	ECC103JF01	Ceramic AP	102	±20%
C129	00383900	ECC473JF03	Ceramic AP	472	±20%
C66,69,130	00381500	ECC104FF07	Ceramic AP	103	+80%−20%
C14,16,19,22, 29,51,62,71	58335800	ECC224FF00	Ceramic AP	223	+80%−20%
C32	00383700	ECC472IF08	Ceramic AP	470	±10%
C59	00383200	ECC332IF09	Ceramic Ap	330	10%
C72	00358100	ECS152JF15	Poly Cap	150pF	±5% 50V
C73	00360600	ECS472JF12	Poly Cap	470	±5% 50V
C45,46,74	00403800	ECP103KF13	Mylar Cap	102	±10%
C38,39	00404000	ECP123KF19	Mylar Cap	122	±10%
C114,115	00405200	ECP393KF14	Mylar Cap	392	±10%
C47,48	00405400	ECP473KF15	Mylar Cap	472	±10%
C43,44	00405800	ECP683KF12	Mylar Cap	682	±10%
C33	00407800	ECP474KF16	Mylar Cap	473	±10%
C112,113	00406600	ECP154KF19	Mylar Cap	153	±10% 50V
C121	00407000	ECP224KF17	Mylar Cap	223	±10% 50V
C107	00407400	ECP334KF17	Mylar Cap	333	±10% 50V
C84,94,110, 111	00408600	ECP105KF15	Mylar Cap	104	±10% 50V
C119	00406200	ECP104KF14	Mylar Cap	103	±10% 50V
C125,82	00300900	ECE106N604	Elect Cap	1μF NP	
C42	58335900	ECE225L602	Elect Cap	0.22μF/16V	(CLC)
C93,95	58336000	ECE475L601	Elect Cap	0.47μF/16V	(CLC)
C41	48463900	ECE106F601	Elect Cap	1μF/16V	(CLC)
C26,27,34,40, 67	58336100	ECE336L603	Elect Cap	3.3μF/16V	(CLC)
C2,18,21,23, 36,37,49,50, 98,103	58336600	ECE226L603	Elect Cap	2.2μF/16V	(CLC)
C65,97,102, 116,120	58336200	ECE476L602	Elect Cap	4.7μF/16V	(CLC)
C29,30,70,80, 90,92	48459800	ECE107C601	Elect Cap	10μF/16V	
C123	48460100	ECE477C809	Elect Cap	47μF/16V	
C13,24,31,68, 91,108,118, 101	48460200	ECE108C808	Elect Cap	100μF/16V	
C35,100,109	48460300	ECE228C801	Elect Cap	220μF/16V	
C122	48460500	ECE478CCB7	Elect Cap	470μF/16V	
R84,162	46476100	ERJ2720618	Resistor	270 ohm	1/6W
R94,100	46474300	ERJ4710611	Resistor	47	1/6W
R7,11	46475100	ERJ1020610	Resistor	100	1/6W
R77,85,164,39	46475900	ERJ2220613	Resistor	220	1/6W
R27	46476300	ERJ3320613	Resistor	330	1/6W
R18	46476500	ERJ3920611	Resistor	390	1/6W
R16	46476900	ERJ5620616	Resistor	560	1/6W
R19	46477200	ERJ8220615	Resistor	820	1/6W
R17,50,55,92, 95	46477400	ERJ1030611	Resistor	1K	1/6W
R10	46477800	ERJ1530616	Resistor	1.5K	1/6W

• **Parts List < GPB1351D12 >**

Parts No.	Stock No. (J)	Stock No. (T)	Description		
R40,48,49,83, 118,120,163	46478200	ERJ2230614	Resistor	2.2K	1/6W
R60,64,169, 102	46478600	ERJ3330614	Resistor	3.3K	1/6W
R8,66,70,71, 165,174	46479000	ERJ4730613	Resistor	4.7K	1/6W
R101	46479200	ERJ5630617	Resistor	5.6K	1/6W
R29,81,160, 161	46479600	ERJ8230616	Resistor	8.2K	1/6W
R14,25,28,32, 58,63,70,91, 170,173	46479800	ERJ1040612	Resistor	10K	1/6W
R88	46480000	ERJ1240618	Resistor	12K	1/6W
R105,109,82, 171,56	46480200	ERJ1540617	Resistor	15K	1/6W
R21,22,23,15, 36,41,42,52, 35,87,89,172	46480600	ERJ2240615	Resistor	22K	1/6W
R80	46480800	ERJ2740610	Resistor	27K	1/6W
R43,44,75, 106,110	46481000	ERJ3340615	Resistor	33K	1/6W
R31,34,39,45, 46,176	46481400	ERJ4740614	Resistor	47K	1/6W
R67	46481600	ERJ5640618	Resistor	56K	1/6W
R38,78,79	46482200	ERJ1050613	Resistor	100K	1/6W
R47	46482600	ERJ1550618	Resistor	150K	1/6W
R72	46482800	ERJ1850616	Resistor	180K	1/6W
R73	46483800	ERJ4750615	Resistor	470K	1/6W
R9	46484600	ERJ1060614	Resistor	1M	1/6W
R20	00224700	ERJ1010413	Resistor	10 ohm	1/4W
R5	00230300	ERJ2210416	Resistor	22	1/4W
R93,133,136	00224800	ERJ1020414	Resistor	100	1/4W
R74	00227600	ERJ1520419	Resistor	150	1/4W
R142	00233200	ERJ3320417	Resistor	330	1/4W
R103,134,166, 140	00235700	ERJ4720416	Resistor	470	1/4W
R12	00238200	ERJ6820413	Resistor	680	1/4W
R3,68,115, 127,138,167	00224900	ERJ1030415	Resistor	1K	1/4W
R53,54	00227700	ERJ1530410	Resistor	1.5K	1/4W
R53,54,65	00230500	ERJ2230418	Resistor	2.2K	1/4W
R116,126	00231900	ERJ2730413	Resistor	2.7K	1/4W
R24	00233300	ERJ3330418	Resistor	3.3K	1/4W
R113,125	00234600	ERJ3930416	Resistor	3.9K	1/4W
108,111	00235800	ERJ4730417	Resistor	4.7K	1/4W
R139	00237100	ERJ5630411	Resistor	5.6K	1/4W
R141	00239500	ERJ8230410	Resistor	8.2K	1/4W
R26,30,61,62, 59,69,145, 148,149,150	00225000	ERJ1040416	Resistor	10K	1/4W
R147,151,154	00227800	ERJ1540411	Resistor	15K	1/4W
R158	00229200	ERJ1840410	Resistor	18K	1/4W
R33,37,51,144, 146,152,157	00230600	ERJ2240419	Resistor	22K	1/4W
R122,124	00232000	ERJ2740414	Resistor	27K	1/4W
R107,112	00235900	ERJ4740418	Resistor	47K	1/4W
R4,6,014,128, 131,143,153	00225100	ERJ1050417	Resistor	100K	1/4W
R129,130	00227900	ERJ1550412	Resistor	150K	1/4W
R137	00236000	ERJ4750419	Resistor	470K	1/4W
R132,135	00237300	ERJ5650413	Resistor	560K	1/4W
△R57,75, △76, △13, △114, △117	00119800	ERJ102F221	Resistor	100 ohm	1/2W
	58347000	MEJ1288M02	3 Pin Plug		Plug "0"

4-5. GPB1340D03 Tuner P.C. Board. FM/AM, 2 bands (Stock No. 58332100)

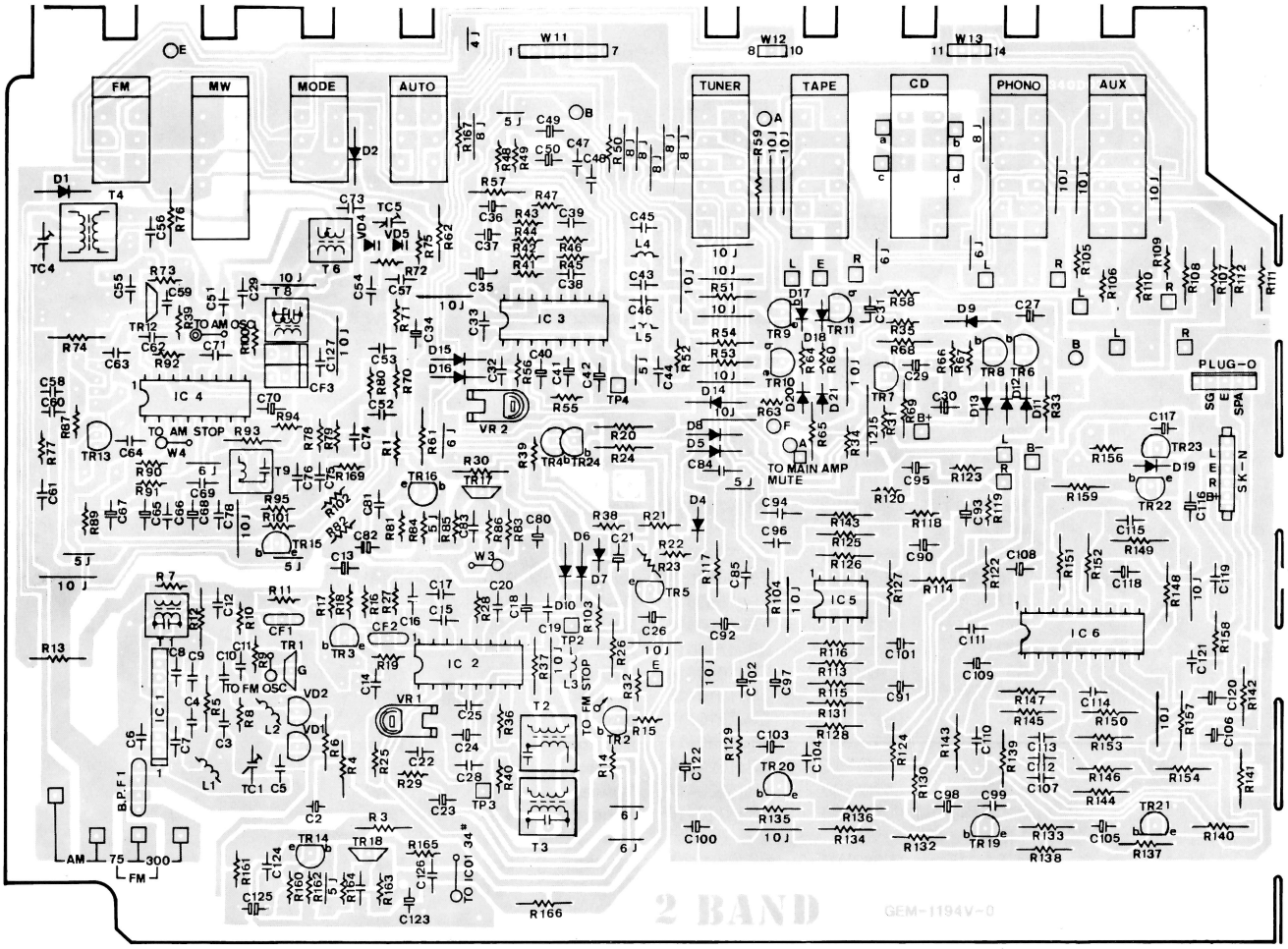

• Component Side

• Parts List

Parts No.	Stock No. (J)	Stock No. (T)	Description
IC			
IC1	58333500	EIC0073585	TA 7358P
IC2	03612300	EIC0012319	LA 1231N
IC3	58333600	EIC1161C39	uPC 1161C
IC4	03608000	EIC0012401	LA 1240
IC5	58333700	EIC6458DX8	LA 6458D
IC6	58333800	EIC0038106	TDA 3810
Transistor			
TR19,20,21	46078601	ESC0732G57	2SC 732GR
TR6,8	58335110	ESC1015G52	2SC 1015GR
TR2,4,5,7,11, 13,14,15,16	07194801	ESC1815G56	2SC 1815GR
TR3	07273601	ESC1923R52	2SC 1923R
TR9,10	58335200	ESC2120Y51	2SC 2120Y
TR17,18	03703400	ESK0163D26	2SK 163
TR1,12	46898202	ESK0212E75	2SK 212E
TR24	58331200	ESCA950Y51	2SA 950Y
T1	58334300	ETF0103092	FM I.F.T.
T2	58347600	ETD0116106	FM I.F.T.
T3	58347700	ETD0126107	FM I.F.T.
T4	58334200	ETE0010102	MW RF Coil
T6	58333900	ETA0362070	MW OSC Coil
T8	58334100	ETM0759073	AM I.F.T.
T9	58334000	ETM0760071	AM I.F.T.
VR1	58333100	ERH104A018	Semi-VR 10K ohm
VR2	58333000	ERH503A015	Semi-VR 5K ohm
L1,2	58334700	ELL0051D00	FM OSC/RF Coil
L3	58335000	ETL022UH17	Chock Coil 22μH
L4,5	58334900	ETL040MH11	Chock Coil 40mH
R40,48,49,83, 118,120,163	46478200	ERJ2230614	Resistor 2.2K 1/6W

• **Parts List < GPB1340D03 >**

Parts No.	Stock No. (J)	Stock No. (T)	Description		
Diode					
VD1,2	58335400	EDV1310019	KV 1310		
VD4,5	58335300	EDV1236010	KV 1236Z		
D1,2,4,5,6,7, 8,9,10,11,12, 13,14,15,16, 17,18,20,21	58335500	EDS4148124	IN 4148		
CF1,2	58333300	ECF1071815	FM 10.7 MHz Ceramic Filter		
CF3	58333400	ECF450A216	AM 450A Ceramic Filter (Double)		
BPF1	58333200	ECF8810848	FM Band Pass Filter		
TC5	58332900	ECT0101420	Trimmer 10pF Yellow		
TC1,4	58332800	ECT0301220	Trimmer 30pF Red		
C7	00384100	ECC500IF02	Ceramic AP	5pF	±10%
C3,56	00381200	ECC101PF01	Ceramic AP	10 N150	±10%
C9	58335700	ECC301PF05	Ceramic AP	30 N150	±10%
C127	00383700	ECC471IF07	Ceramic AP	47pF	±10%
C11,20,83,85, 96,126	00381300	ECC102IF06	Ceramic AP	100	±10%
C99,104	00382600	ECC222IF09	Ceramic AP	220	±10%
C4,5,6,8,63, 76,81,124	00381400	ECC103JF01	Ceramic AP	102	±20%
C66,69	00381500	ECC104FF07	Ceramic AP	103	±80% 20%
C14,16,19,22, 29,51,62,71	58335800	ECC224FF00	Ceramic AP	223	±80% 20%
C32	00383700	ECC472IF08	Ceramic AP	470	±10%
C59	00383200	ECC332IF09	Ceramic Ap	330	10%
C73	00360600	ECS472JF12	Poly Cap	470	±5% 50V
C45,46,74	00403800	ECP153KF19	Mylar Cap	102	±10%
C38,39	00404000	ECP123KF19	Mylar Cap	122	±10%
C114,115	00405200	ECP393KF14	Mylar Cap	392	±10%
C47,48	00405400	ECP473KF15	Mylar Cap	472	±10%
C43,44	00405800	ECP683KF12	Mylar Cap	682	±10%
C33	00407800	ECP474KF16	Mylar Cap	473	±10%
C112,113	00406600	ECP154KF19	Mylar Cap	153	±10% 50V
C121	00407000	ECP224KF17	Mylar Cap	223	±10% 50V
C107	00407400	ECP334KF17	Mylar Cap	333	±10% 50V
C84,94,110, 111	00408600	ECP105KF15	Mylar Cap	104	±10% 50V
C119	00406200	ECP104KF14	Mylar Cap	103	±10% 50V
C125,82	00300900	ECE106N604	Elect Cap	1μF NP	
C42	58335900	ECE225L602	Elect Cap	0.22μF/16V	(CLC)
C93,95	58336000	ECE475L601	Elect Cap	0.47μF/16V	(CLC)
C41	48463900	ECE106F601	Elect Cap	1μF/16V	(CLC)
C26,27,34,40, 67	58336100	ECE336L603	Elect Cap	3.3μF/16V	(CLC)
C2,18,21,23, 36,37,49,50, 98,103	58336600	ECE226L603	Elect Cap	2.2μF/16V	(CLC)
C65,97,102, 116,120	58336200	ECE467L602	Elect Cap	4.7μF/16V	(CLC)
C29,30,70,80, 90,92	48459800	ECE107C601	Elect Cap	10μF/16V	
C123	48460100	ECE477C809	Elect Cap	47μF/16V	
C13,24,31,68, 91,108,118, 101	48460200	ECE108C808	Elect Cap	100μF/16V	
C35,100,109	48460300	ECE228C801	Elect Cap	220μF/16V	
C122	48460500	ECE478CCB7	Elect Cap	470μF/16V	
R84,162	46476100	ERJ2720618	Resistor	270 ohm	1/6W
R94,100	46474300	ERJ4710611	Resistor	47	1/6W
R7,11	46475100	ERJ1020610	Resistor	100	1/6W
R77,85,164,39	46475900	ERJ2220613	Resistor	220	1/6W
R27	46476300	ERJ3320613	Resistor	330	1/6W
R18	46476500	ERJ3920611	Resistor	390	1/6W
R16	46476900	ERJ5620616	Resistor	560	1/6W
R19	46477200	ERJ8220615	Resistor	820	1/6W
R17,50,55,92, 95	46477400	ERJ1030611	Resistor	1K	1/6W
R10	46477800	ERJ1530616	Resistor	1.5K	1/6W

• **Parts List < GPB1340D03 >**

Parts No.	Stock No. (J)	Stock No. (T)	Description		
R60,64,169, 102	46478600	ERJ3330614	Resistor	3.3K	1/6W
R8,66,70,71, 165	46479000	ERJ4730613	Resistor	4.7K	1/6W
R101	46479200	ERJ5630617	Resistor	5.6K	1/6W
R29,81,160, 161	46479600	ERJ8230616	Resistor	8.2K	1/6W
R14,25,28,32, 58,63,70,91, 173	46479800	ERJ1040612	Resistor	10K	1/6W
R88	46480000	ERJ1240618	Resistor	12K	1/6W
R105,109,82, 56	46480200	ERJ1540617	Resistor	15K	1/6W
R21,22,23,15, 36,41,42,52, 35,87,89	46480600	ERJ2240615	Resistor	22K	1/6W
R80	46480800	ERJ2740610	Resistor	27K	1/6W
R43,44,75, 106,110	46481000	ERJ3340615	Resistor	33K	1/6W
R31,34,39,45, 46	46481400	ERJ4740614	Resistor	47K	1/6W
R67	46481600	ERJ5640618	Resistor	56K	1/6W
R38,78,79	46482200	ERJ1050613	Resistor	100K	1/6W
R47	46482600	ERJ1550618	Resistor	150K	1/6W
R72	46482800	ERJ1850616	Resistor	180K	1/6W
R73	46483800	ERJ4750615	Resistor	470K	1/6W
R9	46484600	ERJ1060614	Resistor	1M	1/6W
R20	00224700	ERJ1010413	Resistor	10 ohm	1/4W
R5	00230300	ERJ2210416	Resistor	22	1/4W
R93,133,136	00224800	ERJ1020414	Resistor	100	1/4W
R74	00227600	ERJ1520419	Resistor	150	1/4W
R142	00233200	ERJ3320417	Resistor	330	1/4W
R103,134,166, 140	00235700	ERJ4720416	Resistor	470	1/4W
R12	00238200	ERJ6820413	Resistor	680	1/4W
R3,68,115, 127,138,167	00224900	ERJ1030415	Resistor	1K	1/4W
R53,54	00227700	ERJ1530410	Resistor	1.5K	1/4W
R53,54,65	00230500	ERJ2230418	Resistor	2.2K	1/4W
R116,126	00231900	ERJ2730413	Resistor	2.7K	1/4W
R24	00233300	ERJ3330418	Resistor	3.3K	1/4W
R113,125	00234600	ERJ3930416	Resistor	3.9K	1/4W
108,111	00235800	ERJ4730417	Resistor	4.7K	1/4W
R139	00237100	ERJ5630411	Resistor	5.6K	1/4W
R141	00239500	ERJ8230410	Resistor	8.2K	1/4W
R26,30,61,62, 59,69,145, 148,149,150	00225000	ERJ1040416	Resistor	10K	1/4W
R147,151,154	00227800	ERJ1540411	Resistor	15K	1/4W
R158	00229200	ERJ1840410	Resistor	18K	1/4W
R33,37,51,144, 146,152,157	00230600	ERJ2240419	Resistor	22K	1/4W
R122,124	00232000	ERJ2740414	Resistor	27K	1/4W
R107,112	00235900	ERJ4740418	Resistor	47K	1/4W
R4,6,014,128, 131,143,153	00225100	ERJ1050417	Resistor	100K	1/4W
R129,130	00227900	ERJ1550412	Resistor	150K	1/4W
R137	00236000	ERJ4750419	Resistor	470K	1/4W
R132,135	00237300	ERJ5650413	Resistor	560K	1/4W
⚠R57,75, ⚠76, ⚠13, ⚠114, ⚠117	00119800	ERJ102F221	Resistor	100 ohm	1/2W
	58347000	MEJ1288M02	3 Pin Plug		Plug "0"

4-6. • GPB1337D12 Cassette Deck REC/P.B. Amp. & Audio Amp. (Stock No. 58345900)

• Component Side

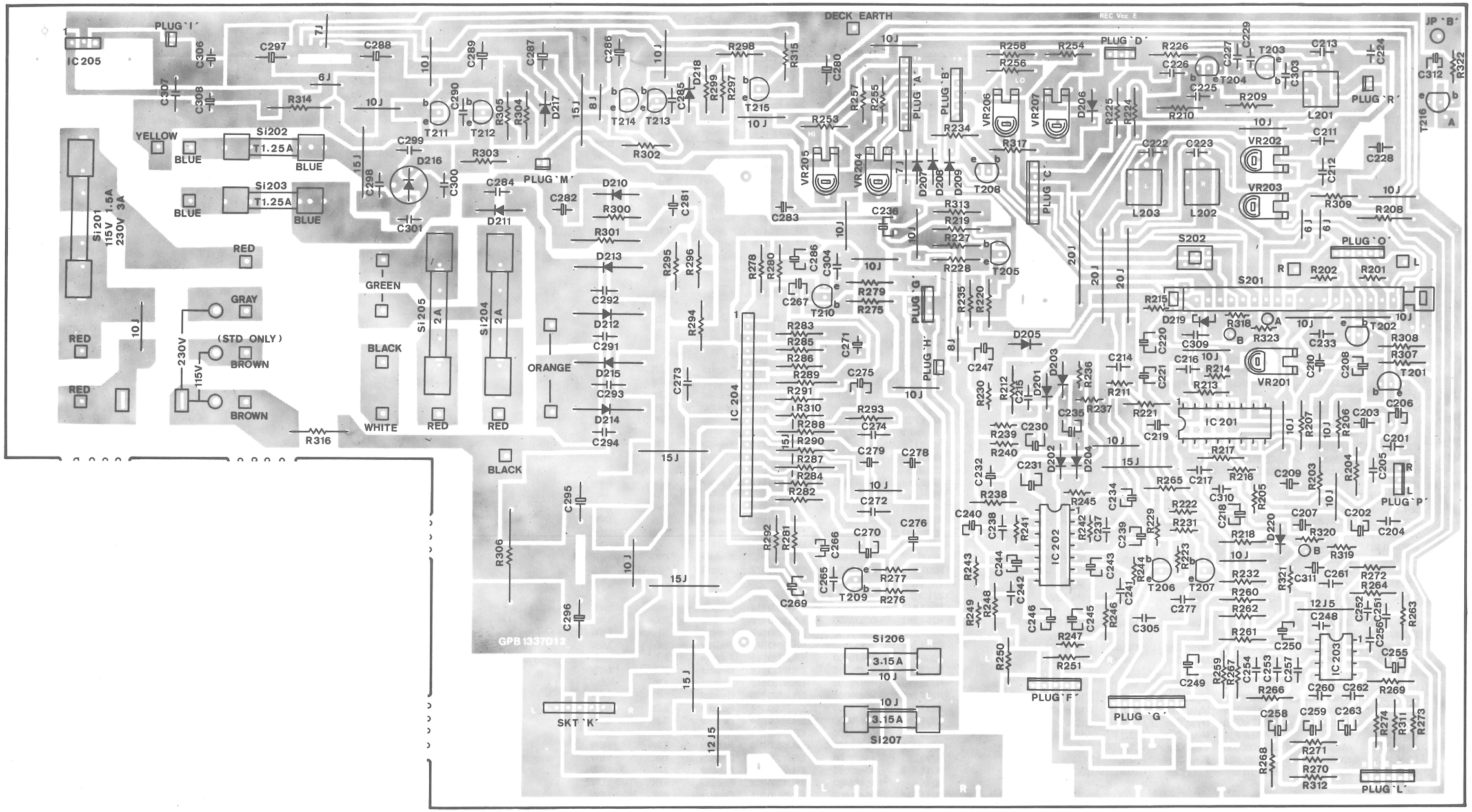

• **Parts List < GPB1337D12 >**

Parts No.	Stock No. (J)	Stock No. (T)	Description		
IC					
IC201	58329900	EIC0077848	TA 7784P		
IC202	46899000	EIC0032207	LA 3220		
IC203	58330000	EIC0064581	6458DS		
⚠ IC204	58325900	EIC0041315	STK 4131 – II		
IC205	58325800	EIC078M067	78M06		
Transistor					
T201,202	58330900	ESCC536F79	2SC 536F		
T203	07194800	ESC1815G56	2SC 1815GR		
T204,205,214, 216	58330800	ESC2120Y51	2SC 2120Y		
T206,207,209 210	58331500	ESC1012F69	2SC 1012F		
T208	03053601	ESC0734F69	2SC 734F		
T211	58331200	ESCA950Y51	2SA 950Y		
T212	58331100	ESC5610C62	Hit 5610C		
T213,215	58331000	ESC5609C64	Hit 5609C		
Diode					
D201,202,203, 204,205,206, 207,208,209, 210,219,220	58331300	EDS4148124	IN 4148		
D211	58330700	EDS4002424	IN 4002		
D212,213,214, 215	58330600	EDS5402423	IN 5402		
⚠ D216	58041000	ERBW005D02	W 005		
D217,218	58331400	EDZ1200008	12V		
L201	58330200	ETC0012067	Rec Osc Coil Toe 1206		
L202,203	58330100	ETL018MH09	Chock Coil 18mH Lch 1206		
VR201	58330300	ERH502A014	Semi-Fix	500 ohm	8mm
VR204,205, 206,207	58330400	ERH203A014	Semi-Fix	2K ohm	8mm
VR202,203	58330500	ERH105A019	Semi-Fix	100K ohm	8mm
C237,238	00384200	ECC561IF01	Ceramic Cap	56pF	±10%
C229,256,257	00381300	ECC102IF06	Ceramic Cap	100pF	±10%
C222,223	00382000	ECC152IF01	Ceramic Cap	150pF	±10%
C211,212,260, 262	00382600	ECC222IF09	Ceramic Cap	220pF	±10%
C265,276,277, 304	00383800	ECC472NF00	Ceramic Cap	470pF	±10%
C284,291,292, 293,294,298, 299,300,301	00381400	ECC104FF07	Ceramic Cap	103pF	+80% –20%
C261,248	00382700	ECC224FF00	Ceramic Cap	223pF	+80% –20%
C213	00361500	ECS682JF19	Poly Cap	680pF	±5% 50V
C224	00358200	ECS153JF16	Poly Cap	1500pF	±5% 50V
C201,204,205, 233,241,242	00403800	ECP103KF13	Mylar Cap	102pF	±10% 50V
C216,217,225	00406200	ECP104KF14	Mylar Cap	103pF	±10% 50V
C272,273,274, 304	00408600	ECP105KF15	Mylar Cap	104pF	±10% 50V
C253,254	00406800	ECP184KF18	Mylar Cap	183pF	±10% 50V
C285,290	00404600	ECP223KF16	Mylar Cap	222pF	±10% 50V
C226,251,253	00405400	ECP473KF15	Mylar Cap	472pF	±10% 50V
C227,303	00407800	ECP474KF16	Mylar Cap	473pF	±10% 50V
C309,310	00408400	ECP823KF18	Mylar Cap	822pF	±10% 50V
C312	48463900	ECE106L600	Elect Cap	1μF/50V	CLC
C266,267	48464000	ECE226L603	Elect Cap	2.2μF	CLC
C202,203,206, 210,218,219, 220,232,234, 243,244,249, 250,311	48461100	ECE107L601	Elect Cap	10μF/25V	CLC
C245,306,308	48464400	ECE227L707	Elect Cap	22μF/50V	CLC
C275,276,279	48464300	ECE107F602	Elect Cap	10μF/50V	
C207,208	48460000	ECE337C707	Elect Cap	33μF/16V	
C236,247,255, 268,269	48460100	ECE477C809	Elect Cap	47μF/16V	
C239,240,258, 270,271	48461400	ECE477D806	Elect Cap	47μF/25V	

• **Parts List < GPB1337D12 >**

Parts No.	Stock No. (J)	Stock No. (T)	Description		
C281,282	48464600	ECE477FAB1	Elect Cap	47μF/50V	
C278	48461500	ECE108DAB6	Elect Cap	100μF/25V	
C221,231,246	48460300	ECE228C8B3	Elect Cap	220μF/16V	
C209	48460400	ECE338CCB8	Elect Cap	330μF/16V	
C280,283,286, 287,289	48460500	ECE478CCB7	Elect Cap	470μF/16V	
C228	48459200	ECE478BAB4	Elect Cap	470μF/10V	
C288,297	48461900	ECE109DAB9	Elect Cap	1000μF/25V	
C295,296	58348100	ECE339ELB3	Elect Cap	3300μF/35V	
R306	46516100	ERM2732018	Resistor	2.7K ohm	2W
R301	46243800	ERM1531018	Resistor	1.5K	1W
⚠ R314, ⚠ R315	00122400	ERJ470F2F5	Resistor	4.7	1/2W (Fuse)
⚠ R302, ⚠ R303	00233700	ERJ330F4F2	Resistor	3.3	1/4W (Fuse)
R287,288	00119700	ERJ101F208	Resistor	10	1/2W
R289, ⚠ R290	00119800	ERJ102F209	Resistor	100	1/2W
R208	00120800	ERJ1820212	Resistor	180	1/2W
R226	00233700	ERJ3300415	Resistor	3.3	1/4W
R209	00238100	ERJ6810412	Resistor	68	1/4W
R299,304,313	00227600	ERJ1520419	Resistor	150	1/4W
R280,281	00234500	ERJ3920415	Resistor	390	1/4W
R238,268,273	00235700	ERJ4720416	Resistor	470	1/4W
R297,305	00237000	ERJ5620410	Resistor	560	1/4W
R298,221	00239400	ERJ8220419	Resistor	820	1/4W
R277,279,291, 310	00224900	ERJ1030415	Resistor	1K	1/4W
R246,248,265, 272	00226300	ERJ1230411	Resistor	1.2K	1/4W
R225,226,253, 254,274,284, 285,286,293, 312	00230500	ERJ2230418	Resistor	2.2K	1/4W
R275,276	00233300	ERJ3330418	Resistor	3.3K	1/4W
R234,307,308	00235800	ERJ4730417	Resistor	4.7K	1/4W
R255,256	00238300	ERJ6830414	Resistor	6.8K	1/4W
R257,258	00239500	ERJ8230410	Resistor	8.2K	1/4W
R218,232,260, 262,294,309	00225000	ERJ1040416	Resistor	10K	1/4W
R210,227,228, 235,250,251, 263,266	00227800	ERJ1540411	Resistor	15K	1/4W
R212,219,259, 261	00230600	ERJ2240419	Resistor	22K	1/4W
R300	00234700	ERJ3940417	Resistor	39K	1/4W
R220	00235900	ERJ4740418	Resistor	47K	1/4W
R278,282,283, 292	00237200	ERJ5640412	Resistor	56K	1/4W
R224	00238400	ERJ6840415	Resistor	68K	1/4W
R203,204,206, 207,269,270, 271,311	00225100	ERJ1050417	Resistor	100K	1/4W
R213,217,295	00229300	ERJ1850411	Resistor	180K	1/4W
R264,267	00233500	ERJ3350410	Resistor	330K	1/4W
R201,202	46472700	ERJ1010619	Resistor	10 ohm	1/6W
R243,244	46474500	ERJ5610615	Resistor	56	1/6W
R205	46475900	ERJ2220613	Resistor	220	1/6W
R323	46476100	ERJ2720618	Resistor	270	1/6W
R236,239	46476700	ERJ4720612	Resistor	470	1/6W
R237,240	46499600	ERJ6820619	Resistor	680	1/6W
R247,249,321	46478200	ERJ2230614	Resistor	2.2K	1/6W
R229,231,322	46478600	ERJ3330614	Resistor	3.3K	1/6W
R230	46479200	ERJ5630617	Resistor	5.6K ohm	1/6W
R214,216	46479400	ERJ6830610	Resistor	6.8K	1/6W
R222,223	46479800	ERJ1040612	Resistor	10K	1/6W
R211,319	46480600	ERJ2240615	Resistor	22K	1/6W
R215	46481400	ERJ4740614	Resistor	47K	1/6W
R241,242	46481800	ERJ6840611	Resistor	68K	1/6W
R318,320	46482200	ERJ1050613	Resistor	100K	1/6W
R245	46484400	ERJ8250618	Resistor	820K	1/6W
		MEC1070D01	Bare Wire		6 mm
		MEC1109D00	Bare Wire		7 mm
		MEC1071D08	Bare Wire		8 mm
		MEC0822D07	Bare Wire		10 mm
		MEC1082D06	Bare Wire		12.5 mm
		MEC0844D03	Bare Wire		15 mm
		MEC0833D05	Bare Wire		20 mm

• **Parts List < GPB1337D12 >**

Parts No.	Stock No. (J)	Stock No. (T)	Description		
S201	58329800	GWC0924D08	Record/Play Switch		
S202	58328500	GWS0926D01	Slide Switch		
PLUG"I","M", "H","R"	58346900	MEJ1287M05	2 Pin Plug		
PLUG"D","P"	58347000	MEJ1288M02	3 Pin Plug		
PLUG"G"	58347100	MEJ1289M09	4 Pin Plug		
PLUG"F", "O","B"	58347200	MEJ1290M07	5 Pin Plug		
PLUG"C",	58347300	MEJ1291M04	6 Pin Plug		
PLUG"A", "N"	58347400	MEJ1292M01	7 Pin Plug		
PLUG"L",	58347500	MEJ1189M06	5 Pin Plug For Player		
⚠ Si202, ⚠ Si203	58328200	EFSA2521T2	Fuse	T 1.25A	(BEAB)
⚠ Si201, ⚠ Si204, ⚠ Si205	58328300	EFS1A621T0	Fuse	T 1.6A	(BEAB)
⚠ Si204, ⚠ Si205	58328100	EFS2A022F7	Fuse	T 2.0A	(UL)
⚠ Si201	58328000	EFS3A022F4	Fuse	T 3.0A	(UL)
⚠ Si206, ⚠ 207	58328400	EFS3A151F3	Fuse	T 3.15A	

4-7. GPB1339D05 Headphone Jack P.C. Board (Stock No. 58328700)

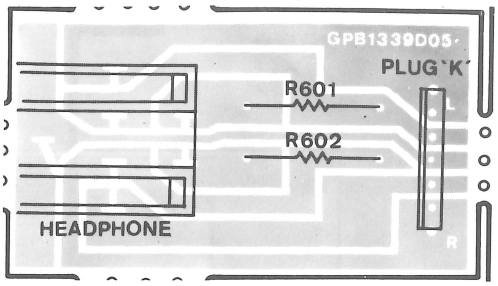

• Component Side

• Parts List

Parts No.	Stock No. (J)	Stock No. (T)	Description		
R601,602	46242800	ERM2221015	Resistor	220 ohm	1W
PLUG"K"	58347200	MEJ1290M07	5 Pin Plug		
	58326200	MEJ1146D01	Headphone Jack		

4-8. GPB1350D04 EQ. Amp. P.C. Board.

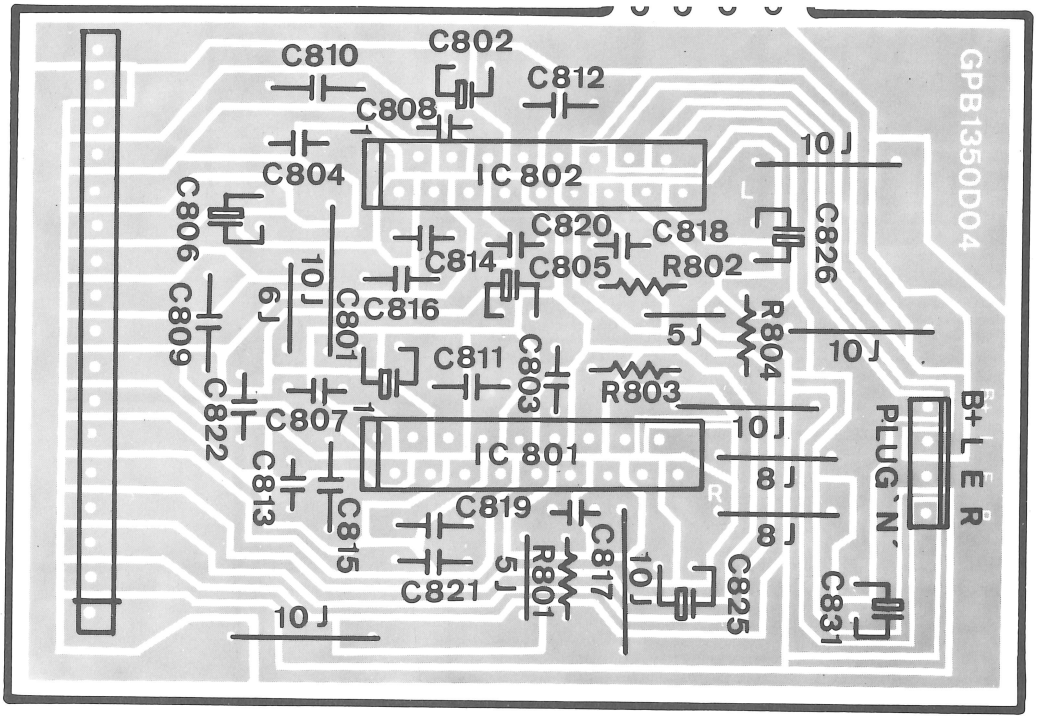

• Component Side

• Parts List

Parts No.	Stock No. (J)	Stock No. (T)	Description		
IC801,802	58326900	EIC0038128	BA 3812		
Plug "N"	58347100	MEJ1289M09	4 Pin Plug		
C805,806	48463600	ECE335L602	Elect Cap	0.33μF	CLC
C801,802	48463900	ECE106L600	Elect Cap	1μF	CLC
C831	48458900	ECE108B801	Elect Cap	100μF/10V	
C825,826	48459000	ECE228B804	Elect Cap	220μF/10V	
C817,818	00403800	ECP103KF13	Mylar Cap	102P	±10% 50V
C807,808	00404800	ECP273KF11	Mylar Cap	272P	±10% 50V
C803,804,821 822	00405800	ECP683KF12	Mylar Cap	682P	±10% 50V
C815,816	00407400	ECP334KF17	Mylar Cap	333P	±10% 50V
C811,812	00407800	ECP474KF16	Mylar Cap	473P	±10% 50V
C809,810	00408600	ECP105KF15	Mylar Cap	104P	±10% 50V
C819,820	00359000	ECS222JF13	Poly Cap	220pF	±5% 50V
C813,814	00361900	ECS822JF15	Poly Cap	820pF	±5% 50V
R801,802,803 804	46479400	ERJ6830610	Resistor	6.8K ohm	1/6W

4-9. GPB1349D06 EQ. VR. & Tone & Volume P.C. Board. (Stock No. 58331700)

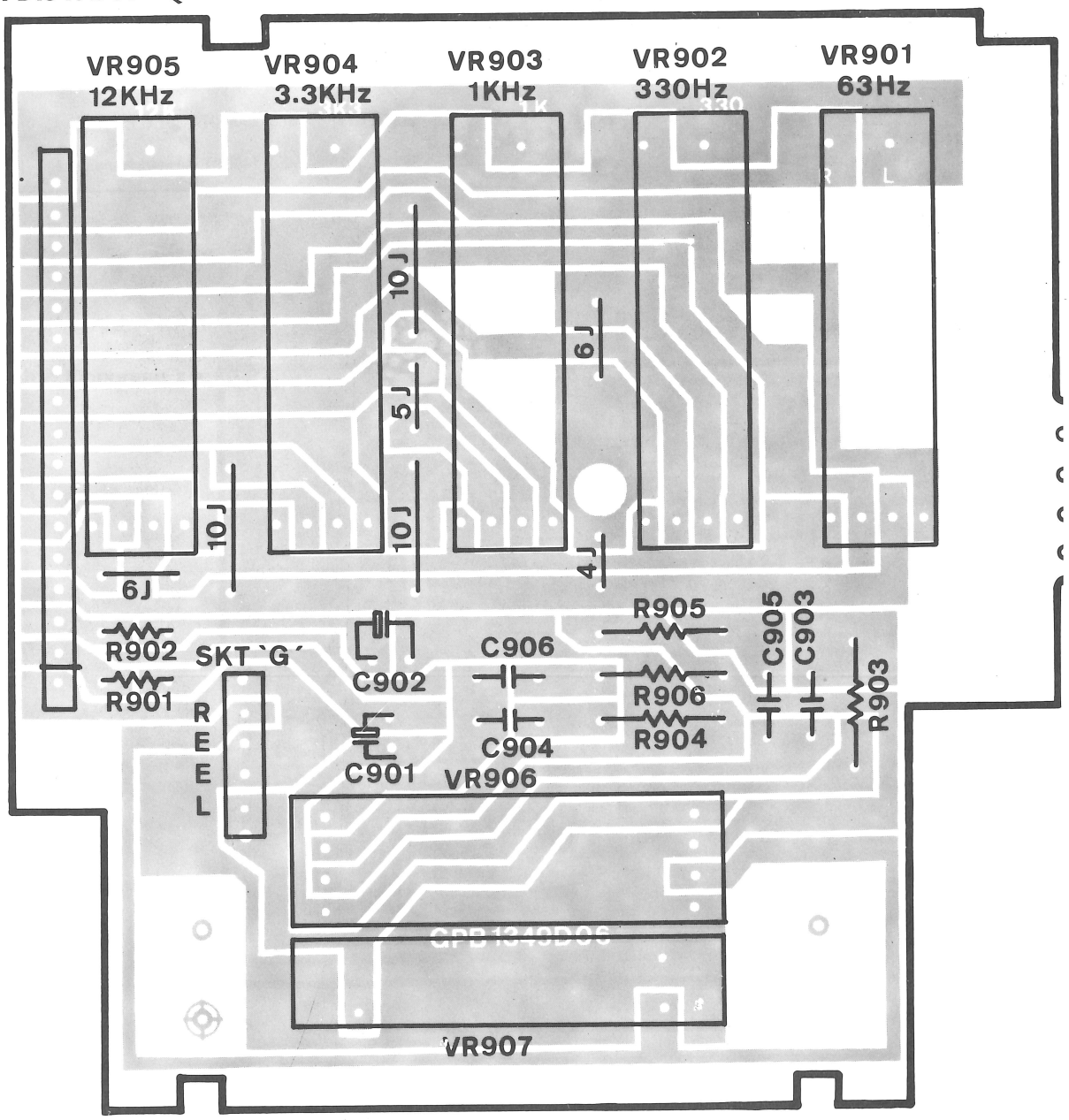

• Parts List

Parts No.	Stock No. (J)	Stock No. (T)	Description		
VR901,902, 903,904,905	58326700	EVR1058903	Equalizer	100KB × 2	
VR906	58326600	EVR1058800	Volume	100KA × 2	(Tap)
VR907	58326800	EVR1059003	Balance	100KW	
SKT "G"	58347800	MEJ1214F14	4 Pin Connector Output		
FOR SKT "G"	58347900	MEJ1049D09	4 Pin Wire Socket		
C901,902	48459800	ECE107C601	Elect Cap	10μF/16V	
C903,904	00383800	ECC472NF00	Ceramic Cap	470pF	±10%
C905,906	00407800	ECP474KF16	Mylar Cap	473pF	±10% 50V
C905,906	00235800	ERJ4730417	Resistor	4.7K ohm	1/4W
C903,904	00227800	ERJ1540411	Resistor	15K ohm	1/4W
C901,902	46479000	ERJ4730613	Resistor	4.7K ohm	1/6W

5. EXPLODED VIEW OF MECHANANISM ASS'Y & PARTS LIST

5-1. b-side Deck Mechanism Ass'y

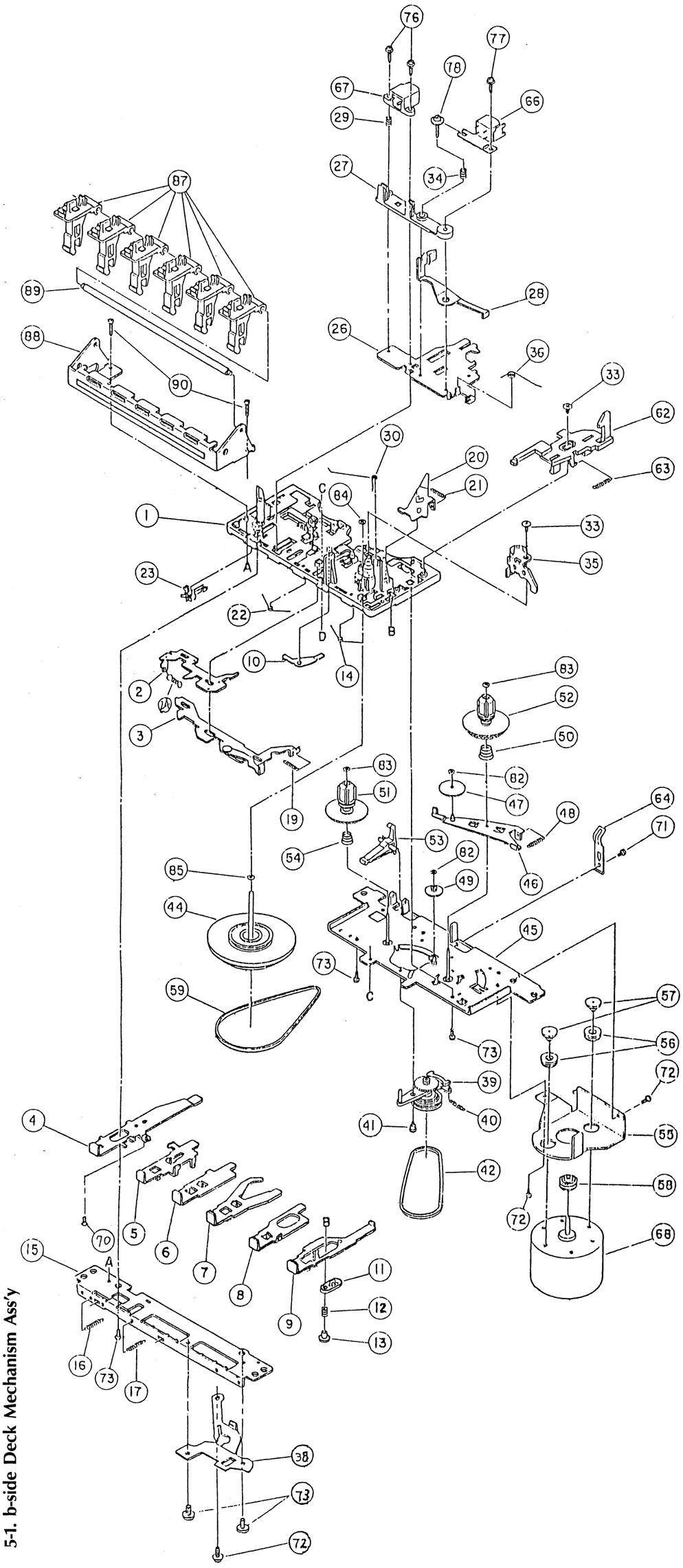

• **Parts List**

No.	Stock No. (J)	Stock No.	Description •	Q'ty
1	58348200	1821 01 60	Main Base Ass'y	1
2	58348300	1821 01 05	Switch Plate	1
3	58348400	1821 01 501	Push Button Actuator Ass'y	1
4	58377100	1821 01 28A	REC Button Lever	1
5	58348500	1821 01 29	Play Button Lever	1
6	58348600	1821 01 30	RWD Button Lever	1
7	58348700	1821 01 31	FF Button Lever	1
8	58348800	1821 01 32	Stop Button Lever	1
9	58348900	1821 01 503	Pause Button Lever Ass'y	1
10	58349000	1821 01 68	RWD Lever	1
11	58349100	1821 01 15	Pause Lever	1
12	58349200	1821 01 16	Pause Lever Spring	1
13	58349300	1821 01 34	Pause Stopper	1
14	58349400	1821 01 23	Button Lever Spring (C)	1
15		1821 01 19	Sub Chassis	1
16	58377200	1821 01 07	Button Lever Spring (A)	1
17	58349500	1821 01 50	Play Button Lever SP (S)	1
18				
19	58349600	1821 01 22	Actuator Spring	1
20	58349700	1821 01 62	Auto Lever	1
21	58349800	1821 01 21	Auto Lever Spring	1
22	58349900	1821 01 49	Button Lever Spring (E)	1
23	58370000	LSA-1115R	Leaf Switch	1
24	58370100	1821 10 38	Switch Actuator SP	1
25				
26	58370200	1829 03 04	Head Panel	1
27	58370300	1829 03 02	Head Base	1
28	58370400	1821 03 301	Sensing Plate Ass'y	1
29	58377300	1821 03 08	E.H. Spring	1
30	58370500	1821 03 12	Head Panel Spring	1
31				
32				
33	58370600	1821 13 05	P.M.E Screw	2
34	58370700	1821 03 07	Spring	1
35	58370800	1821 04 301	Pinch Roller Ass'y	1
36	58370900	1821 04 08	Pinch Roller Spring	1
37				
38	58371000	1821 39 19	Metal Guide	1
39	58371100	1821 07 319	RF Pulley Arm Ass'y	1
40	58371200	1821 07 04	RF Pulley Arm Spring	1
41	58371300	1821 07 21	RF Arm Coller Screw	1
42	58371400	1821 07 05	RF Belt	1
43				
44	58371500	1821 09 301	Flywheel Ass'y	1
45	58371600	1821 10 515	Reel Base Ass'y	1
46	58371700	1821 10 512	Take-Up Gear Plate Ass'y	1
47	58371800	1867 03 101	Take-Up Roller Gear	1
48	58371900	1821 10 08	T.G. Plate Spring	1
49	58372000	1821 10 57	FF Gear	1
50	58372100	1821 10 42	Back Tension spring	1
51	58372200	1821 10 309	Supply Reel Ass'y	1
52	58372300	1821 10 312	Take-Up Reel Ass'y	1
53	58377400	1821 10 69	Record Safety Lever	1
54	58372400	1821 10 46	Back Tension Spring	1
55	58372500	1821 12 10	Motor Bracket	1
56	58372600	1820 13 08	Motor Rubber	2
57	58372700	1821 12 02	Motor Coller Screw	2
58	58372800	1821 12 32	Motor Pulley	1
59	58372900	1720 09 05	Main Belt	1
60				
61				
62	58373000	1821 13 04	Eject Slide Lever	1
63	58373100	1821 13 02	Eject Slide Lever SP	1
64	58373200	1829 10 01	Pack Spring	1
65				
66	58373300	271-30-112	R.P. Head	1
67	58377500	TC-2131 H	E. Head	1
68	58373400	SHW 2L 51	Motor	1
69				
70	58377600	9076 00 00	Tams Screw M2.0×3	1
71	58373500	9179-00-00	C Tapping Screw M2×3	1
72	58373600	9180-00-00	C Tapping Screw M2×4	3
73	58373700	9677-00-00	P Tapping Bind Screw M2×5	5
74				
75				
76	58377700	9821-00-00	⊕⊖ Cap Screw M2×8	2
77	58373800	9820-00-00	⊕⊖ Cap Screw M2×7	1
78	58373900	9922-00-00	Azimuth Screw M2×7	1
79				
80				
81				
82	58374000	9421-00-00	P Washer Cut 1.2×3×0.25	2
83	58374100	9888-00-00	P Washer Cut 1.2×3×0.4	2
84	58374200	9875-00-00	P Washer Cut 1.55×3.8×0.5	1
85	58374300	9999-00-04	P Washer Cut 2.05×4×0.5	1
86				
87	58374400	1821 31 07	Operation Lever	8
88	58374500	1821 31 06	B Frame(s)	1
89	58374600	1829 31 03	Button Lever Shaft	1
90	58374700	9982-00-00	Screw (For Camera) M2×7	2

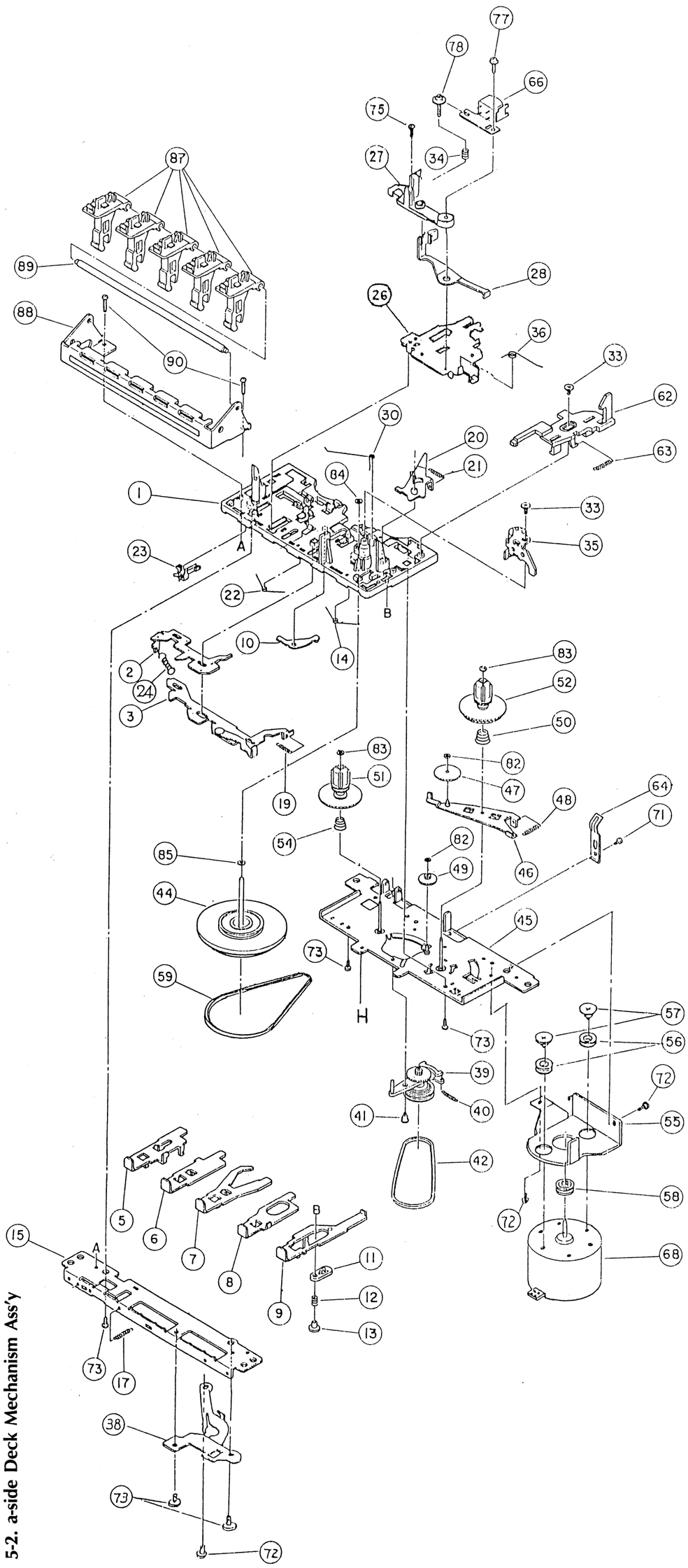

5-2. a-side Deck Mechanism Ass'y

• **Parts List**

No.	Stock No. (J)	Stock No.	Description	Q'ty
1	58348200	1821 01 60	Main Base Ass'y	1
2	58348300	1821 01 05	Switch Plate	1
3	58348400	1821 01 501	Push Button Actuator Ass'y	1
4				1
5	58348500	1821 01 29	Play Button Lever	1
6	58348600	1821 01 30	RWD Button Lever	1
7	58348700	1821 01 31	FF Button Lever	1
8	58348800	1821 01 32	Stop Button Lever	1
9	58348900	1821 01 503	Pause Button Lever Ass'y	1
10	58349000	1821 01 68	RWD Lever	1
11	58349100	1821 01 15	Pause Lever	1
12	58349200	1821 01 16	Pause Lever Spring	1
13	58349300	1821 01 34	Pause Stopper	1
14	58349400	1821 01 23	Button Lever Spring (C)	1
15		1821 01 19	Sub Chassis	1
16				
17	58349500	1821 01 50	Play Button Lever SP (S)	1
18				1
19	58349600	1821 01 22	Actuator Spring	1
20	58349700	1821 01 62	Auto Lever	1
21	58349800	1821 01 21	Auto Lever Spring	1
22	58349900	1821 01 49	Button Lever Spring (E)	1
23	58370000	LSA-1115R	Leaf Switch	1
24	58370100	1821 10 38	Switch Actuator SP	1
25				
26	58370200	1821 03 10	Head Panel	1
27	58370300	1821 03 02	Head Base	1
28	58370400	1821 03 301	Sensing Plate Ass'y	1
29				
30	58370500	1821 03 12	Head Panel Spring	1
31				
32				
33	58370600	1821 13 05	P.M.E Screw	2
34	58370700	1821 03 07	Spring	1
35	58370800	1821 04 301	Pinch Roller Ass'y	1
36	58370900	1821 04 08	Pinch Roller Spring	1
37				
38	58371000	1821 39 19	Metal Guide	1
39	58371100	1821 07 319	RF Pulley Arm Ass'y	1
40	58371200	1821 07 04	RF Pulley Arm Spring	1
41	58371300	1821 07 21	RF Arm Coller Screw	1
42	58371400	1821 07 05	RF Belt	1
43				
44	58371500	1821 09 301	Flywheel Ass'y	1
45	58371600	1821 10 515	Reel Base Ass'y	1
46	58371700	1821 10 512	Take-Up Gear Plate Ass'y	1
47	58371800	1867 03 101	Take-Up Roller Gear	1
48	58371900	1821 10 08	T.G. Plate Spring	1
49	58372000	1821 10 57	FF Gear	1
50	58372100	1821 10 42	Back Tension Spring	1
51	58372200	1821 10 309	Supply Reel Ass'y	1
52	58372300	1821 10 312	Take-Up Reel Ass'y	1
53				1
54	58372400	1821 10 46	Back Tension Spring	1
55	58372500	1821 12 10	Motor Bracket	1
56	58372600	1820 13 06	Motor Rubber	2
57	58372700	1821 12 02	Motor Coller Screw	2
58	58372800	1821 12 32	Motor Pulley	1
59	58372900	1720 09 05	Main Belt	1
60				
61				
62	58373000	1821 13 04	Eject Slide Lever	1
63	58373100	1821 13 02	Eject Slide Lever SP	1
64	58373200	1829 10 01	Pack Spring	1
65				
66	58373300	271-30-112	R.P. Head	1
67				
68	58373400	SHW 2L 51	Motor	1
69				
70				
71	58373500	9179-00-00	C Tapping Screw M2×3	1
72	58373600	9180-00-00	C Tapping Screw M2×4	3
73	58373700	9679-00-00	P Tapping Bind Screw M2×5	5
74				
75				
76				
77	58373800	9820-00-00	⊕⊖ CAP Screw M2×7	1
78	58373900	9922-00-00	Azimuth Screw	1
79				
80				
81				
82	58374000	9421-00-00	P Washer Cut 1.2×3×0.25	2
83	58374100	9888-00-00	P Washer Cut 1.2×3×0.4	2
84	58374200	9875-00-00	P Washer Cut 1.55×3.8×0.5	1
85	58374300	9999-00-04	P Washer Cut 2.05×4×0.5	1
86				
87	58374400	1821 31 07	Operation Lever	5
88	58374500	1821 31 06	B Frame(s)	1
89	58374600	1829 31 03	Button Lever Shaft	1
90	58374700	9982-00-00	Screw (For Camera) M2×7	2

6. OTHER PARTS

6-1. Front View

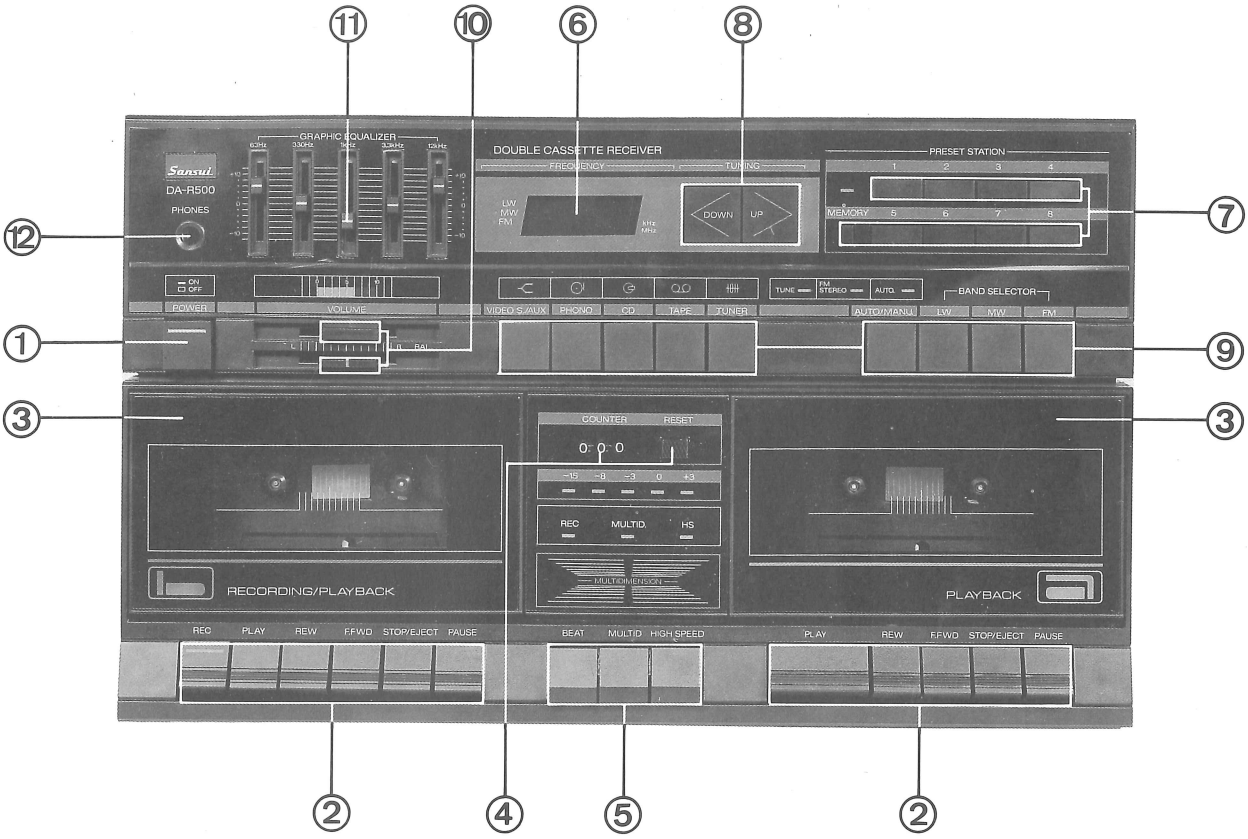

• Parts List

No.	Stock No. (J)	Stock No. (T)	Description
⚠ 1	58322600	GWA0898D08	Power Switch
2	58321700	MDK1336D04	Cassette Key
3	58321100	MDC1283D06	Cassette Cover (L)
	58321200	MDC1284D03	Cassette Cover (R)
4	58322400	MTC008P017	Counter
5	58323100	MDK1330D02	H.S.D. Knob
6	58327300	GDT0921515	Display For Frequency
7	58320800	MDK1359D07	Preset Knob
8	58320700	MDK1342D18	Tuning Knob Up. Down
9	58320500	MDK1358D00	Function Knob
10	58319200	MDK1334D00	Balance, Volume Knob
11	58319000	MDK1332D06	Equalizer Knob
12	58326200	MEJ1146D01	Headphone Jack

6-2. Top View

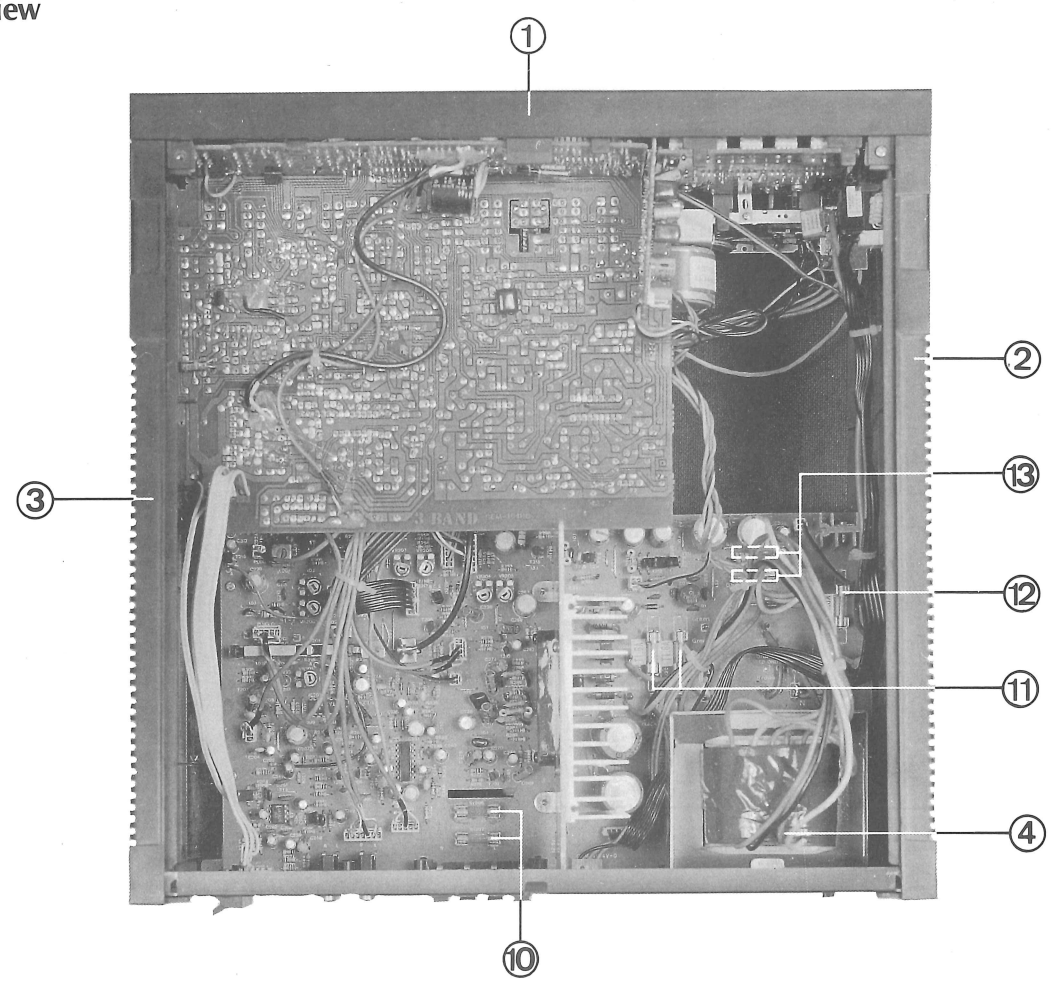

6-3. Bottom View

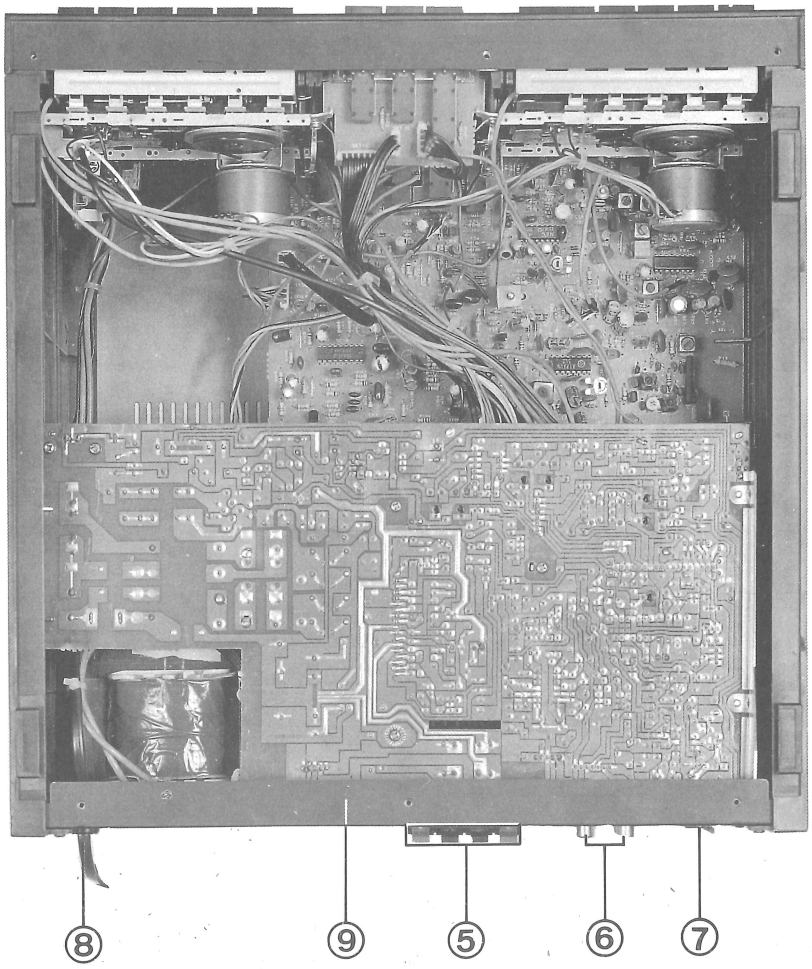

• **Parts List < Top & Bottom View >**

No.	Stock No. (J)	Stock No. (T)	Description
1	58320400	MDC1304D08	Front Panel
2	58323700	MDC1278D00	Side Panel (L)
3	58323800	MDC1281D02	Side Panel (R)
⚠ 4	58325005	GTP0173D07	Power Transformer (UK, BS)
⚠	58325002	GTP0176D08	Power Transformer (UL)
⚠	58325001	GTP1078D02	Power Transformer (XX)
5	58326300	MEJ1229D03	Speaker Socket
6	58326400	MEJ1083D01	TV/CD Socket
7	58324600	MEJ1185D08	Antenna Socket
⚠ 8	58324000	EWP0251100	AC Cord 120V (XX, UL)
⚠	58324100	EWP0251100	AC cord 240V (UK, BS)
9			Rear Panel
⚠ 10	58328400	EFS3A151F3	Fuse 250V F3, 15A (EU, USA)
⚠ 11	58328100	EFS2A022F7	Fuse 250V 2A (UL, XX)
⚠	58328300	EFS1A621T0	Fuse 250V 1.6A (UK, BS)
⚠ 12	58328000	EFS3A022F4	Fuse 250V F3A (XX, UL)
⚠	58328300	EFS1A621T0	Fuse 250V 1.6A (UK, BS)
⚠ 13	58328200	EFSA2521T2	Fuse 250V T1.25A (EU, BS)

7. DISASSEMBLY

7-1. To Remove Cabinet Top.

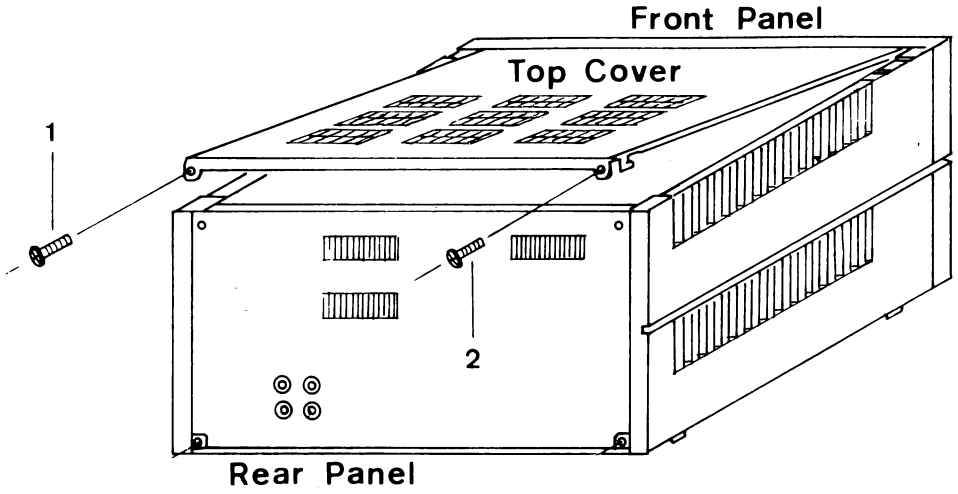

7-2. To Remove Base Board.

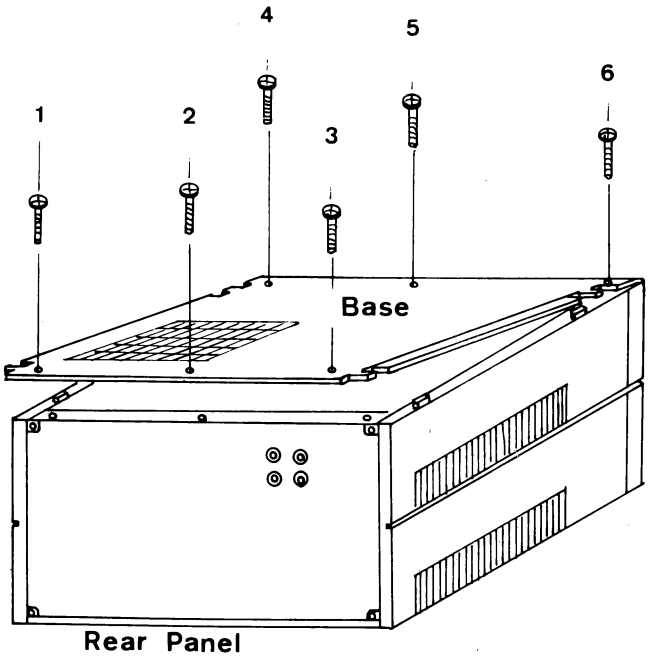

7-3. To Remove Side Panel From Front Panel.

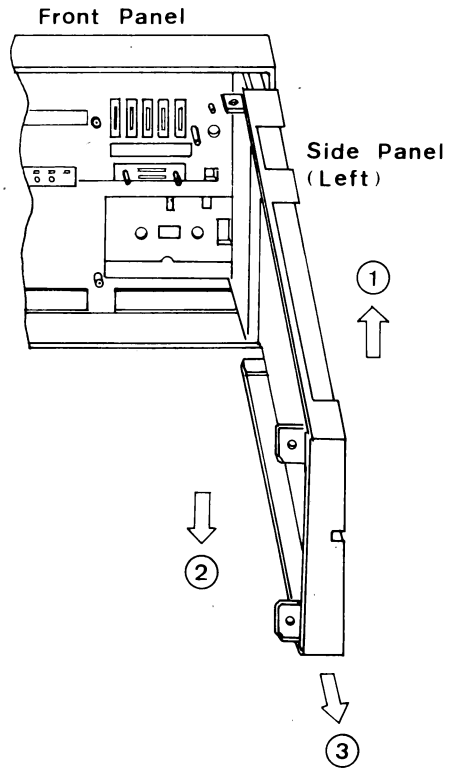

8. EXPLODED VIEW & PARTS LIST

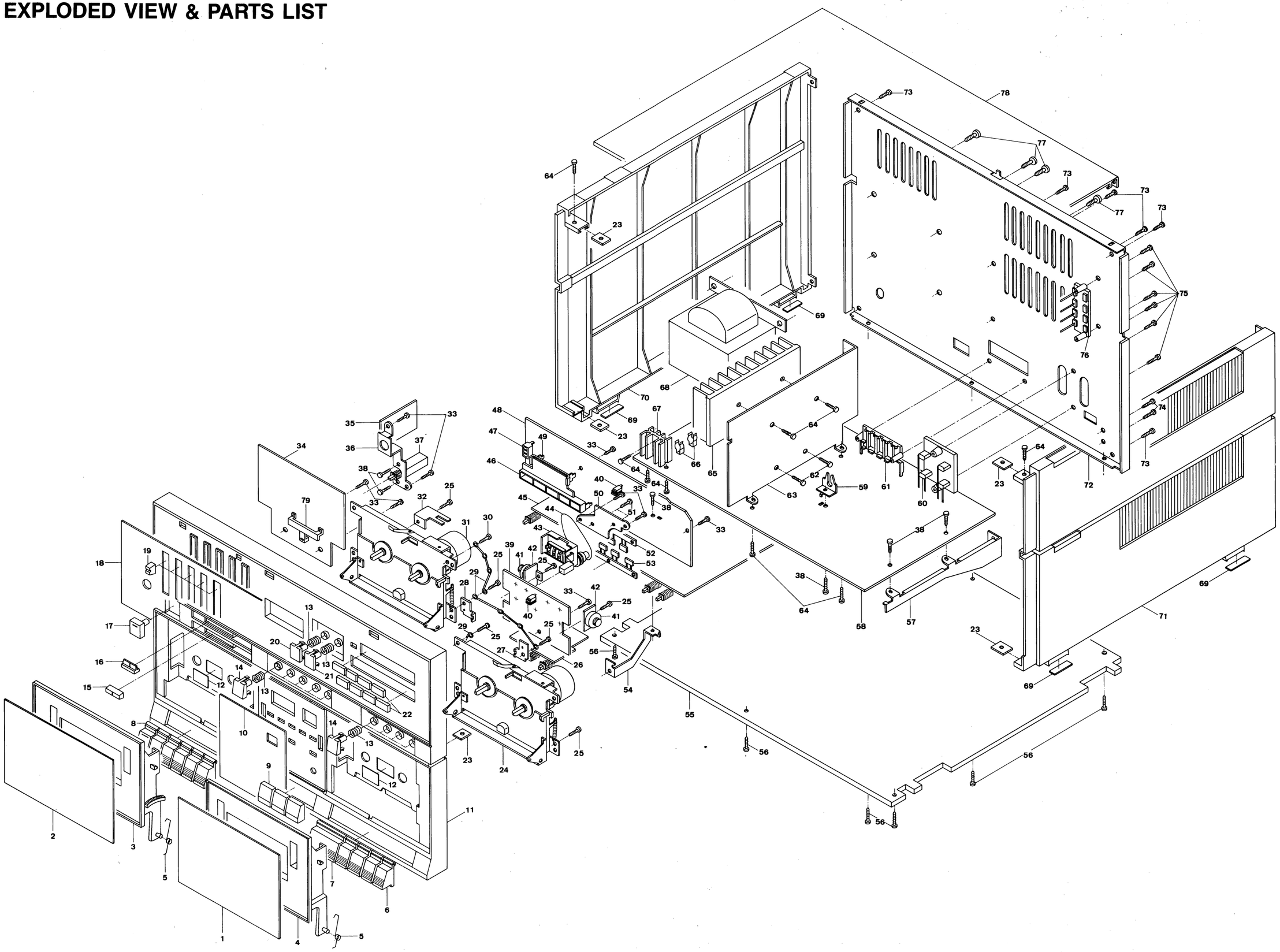

• **Parts List < Exploded View >**

No.	Stock No. (J)	Stock No. (T)	Description	Q'ty
1	58318700	MDS1196D04	Cassette Lens (A)	1
2	58318800	MDS1197D01	Cassette Lens (B)	1
3	58321100	MDC1283D06	Cassette Cover (L)	1
4	58321200	MDC1284D03	Cassette Cover (R)	1
5	58345100	MMS1070D07	Eject Spring	2
6	58321700	MDK1336D04	Cassette Key (B)	9
7	58321800	MDK1335D07	Cassette Key (A) For Play	1
8	58322200	MDK1336D15	Cassette Key (B) For Rec	1
9	58323100	MDK1330D02	H. S. D. Knob	3
10	58319300	MDS1202D00	Level Lens	1
11	58320400	MDC1304D08	Front Panel	1
12	58323600	MDT1319D04	Reflector For Front Panel	2
13	58321900	MMS1063D07	Spring For Knob	11
14	58320500	MDK1358D00	Function Knob	9
15	58319200	MDK1334D00	Balance Knob	1
16	58319100	MDK1333D03	Volume Knob	1
17	58318900	MDK1331D09	Power Knob	1
18	58319500	MDS1219D11	Dial Lens (3B)	1
19	58319000	MDK1332D06	Equalizer Knob	5
20	58320700	MDK1342D18	Tuning Knob (DOWN)	1
21	58320600	MDK1342D07	Tuning Knob (UP)	1
22	58320800	MDK1359D07	Preset Knob Cap	8
23	58321300	MSB1550D04	Angle Plate	5
24				
25	58323000	5240310I07	Screw For Deck & Panel & Gear Bracket	7
26	58332200	GPA1334D09	Function Switch P. C. Board	1
27	58323300	MSB1579D09	Bracket (R) For Function Switch P. C. Board	1
28	58323400	MSB1580D07	Bracket (L) For Function Switch P. C. Board	1
29	58325600	MEC1114D06	Deck Earth Terminal	3
30	58345200	5270204I04	Screw For Terminal	1
31				
32				
33	58322500	5240308I02	Screw For Counter BKT. Power BKT. EQ. & LED & Display P. C. Board	9
34	58331700	GPA1349D05	EQ. P. C. Board	1
35	58328700	GPA1339D04	Headphone P. C. Board	1
36	58321400	MSB1592D02	Bracket For Power & Phono	1
⚠37	58322600	GWA0898D08	Power Switch	1
38	58322300	5060306B03	Screw For Bracket & AMP PCB, REC Bracket & PCB Bracket (D), SW. & Bracket	6

• **Parts List < Exploded View >**

No.	Stock No. (J)	Stock No. (T)	Description	Q'ty
39	58332300	GPA1335D06	LED Display P. C. Borad	1
40	58332700	MPE1265D00	LED spacer 1W	12
41	58322000	MSB1482D08	Gear	2
42	58322100	MSB1483D05	Gear Bracket	2
43	58322400	MTC008P017	Counter	1
44	58325700	MPF0804D08	Counter Belt	1
45	58345400	GPA1351D11	Tuner P. C. Board (3B)	1
46	58337100	MSB1585D02	LED Spacer 5W	1
47	58345500	MSB1586D09	LED Holder 3W	1
48	58336700	GPA1344D00	Freq. Dispaly P. C. Board	1
49	58323500	MSB1577D05	LED Holder	1
50	58321500	MSB1548D09	Bracket For Counter	1
51	58345600	5060304B09	Screw for Counter	2
52	58345700	MDK1385D02	Preset Bracket Knob Ass'y (B)	1
53	58321000	MDK1343D04	Preset Bracket Knob Ass'y (A)	1
54	58322800	MSB1556D06	Bracket for P.C. Board (D)	1
55	58318600	MDC1280D05	Base	1
56	58345800	5320311I05	Screw for Base & Cabinet	6
57	58322900	MSB1596D00	Bracket for P.C. Board (C)	1
58	58345900	GPA1337D11	Amplifier P.C. Board	1
59	58346000	MSB3006D00	Rec Wire Bracket	1
60	58326400	MEJ1083D01	TV/CD Socket	1
61	58326300	MEJ1229D03	Speaker Socket	1
62	58326000	5270314H05	Screw For Power IC & Heat Sink	2
63				
64	58326100	5270308I05	Screw For Heat Sink Panel & Side Cabinet	9
65				
66	58328900	MFC0037D02	Fuse Holder	14
67		MES1043D08	Heat Sink For Eener IC	1
⚠68	58325005	GTP0173D07	Power Transformer	1
69	58346100	MPF1386D02	Cabinet Foot	4
70	58323700	MDC1278D00	Side Cabinet (L)	1
71	58323800	MDC1281D02	Side Cabinet (R)	1
72				
73	58319700	5270308H02	Screw For Rear & Heat Sink & Side Cabinet	6
74	58346200	5060306H01	Screw For Rear & Bracket	2
75	58324800	5240308H09	Screw For Rear & Socket	6
76	58324600	MEJ1185D08	Antenna Socket	1
77	58324900	5060408H08	Screw For Rear & Transformer	4
78	58318500	MSB1597D07	Top Cover	1
79	58320900	MMI1057D01	Pointer For Volume	1

9. SCHEMATIC DIAGRAM

9-1. Cassette Deck REC/P.B. Amp. & Audio Amp. Section.

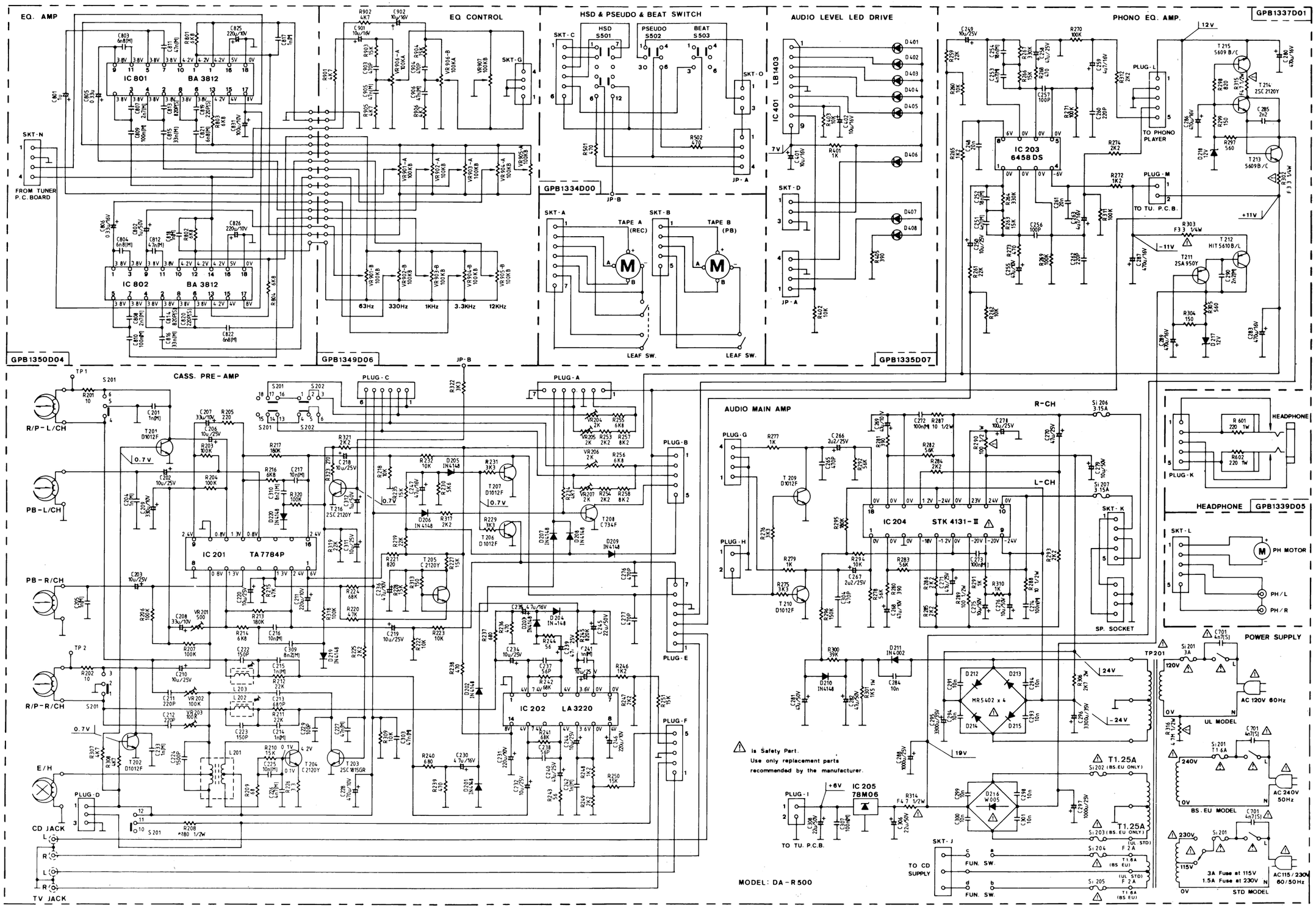

⚠ is Safety Part.
Use only replacement parts recommended by the manufacturer.

9-2. Tuner Section (FM/AM, 2 bands).

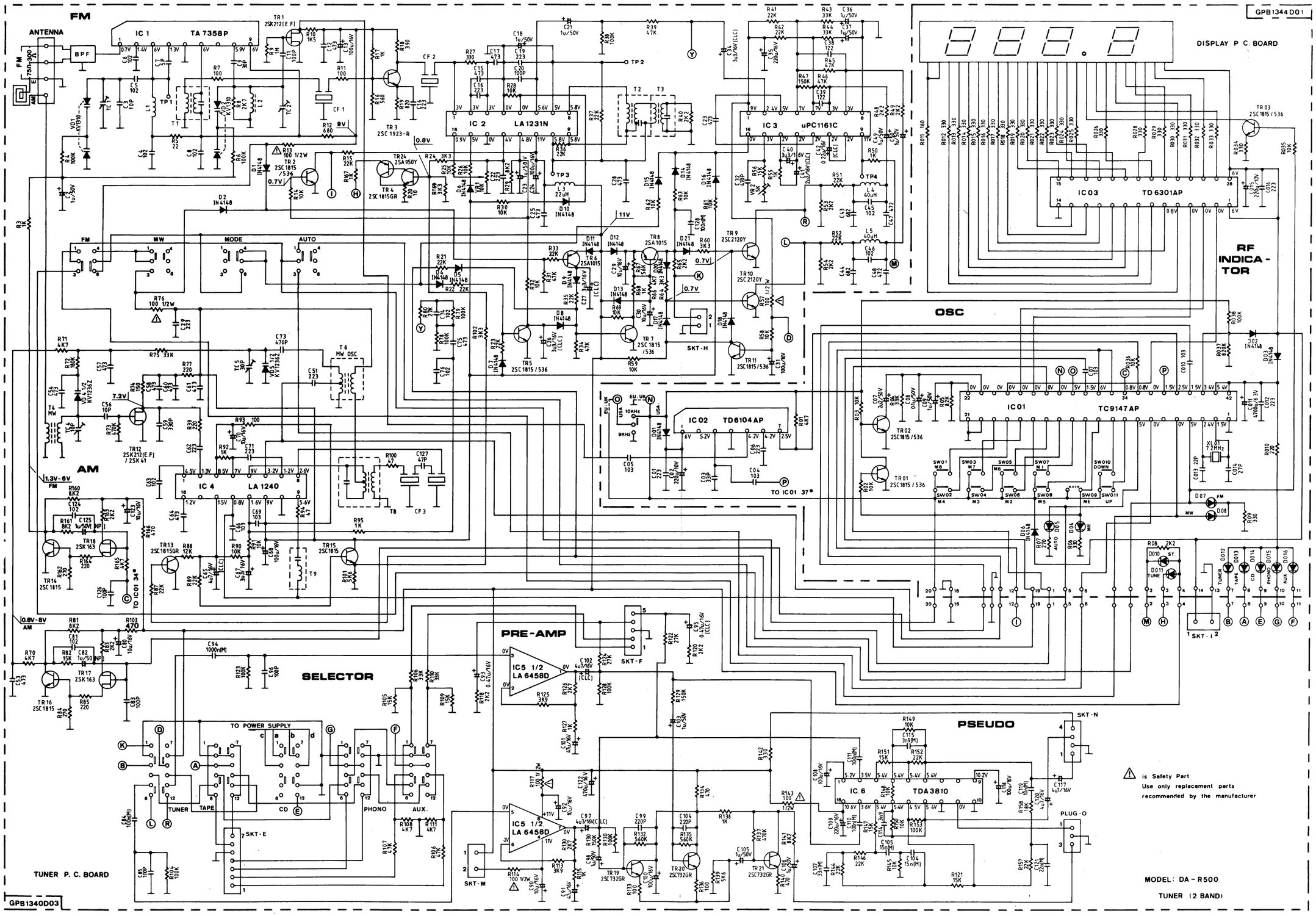

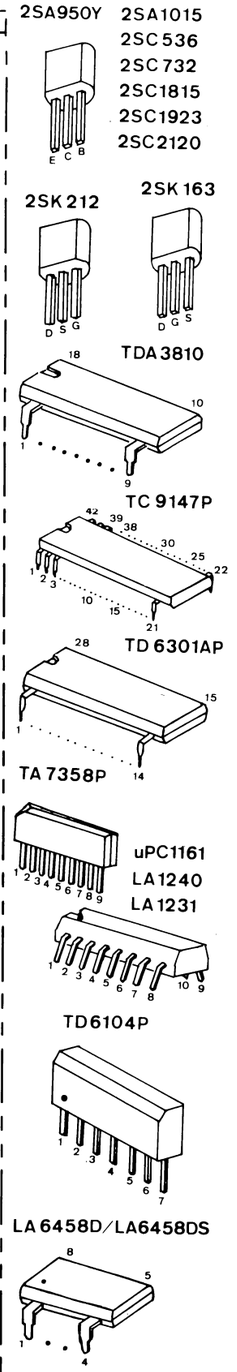

9-3. Tuner Section (FM/MW/LW, 3 bands).

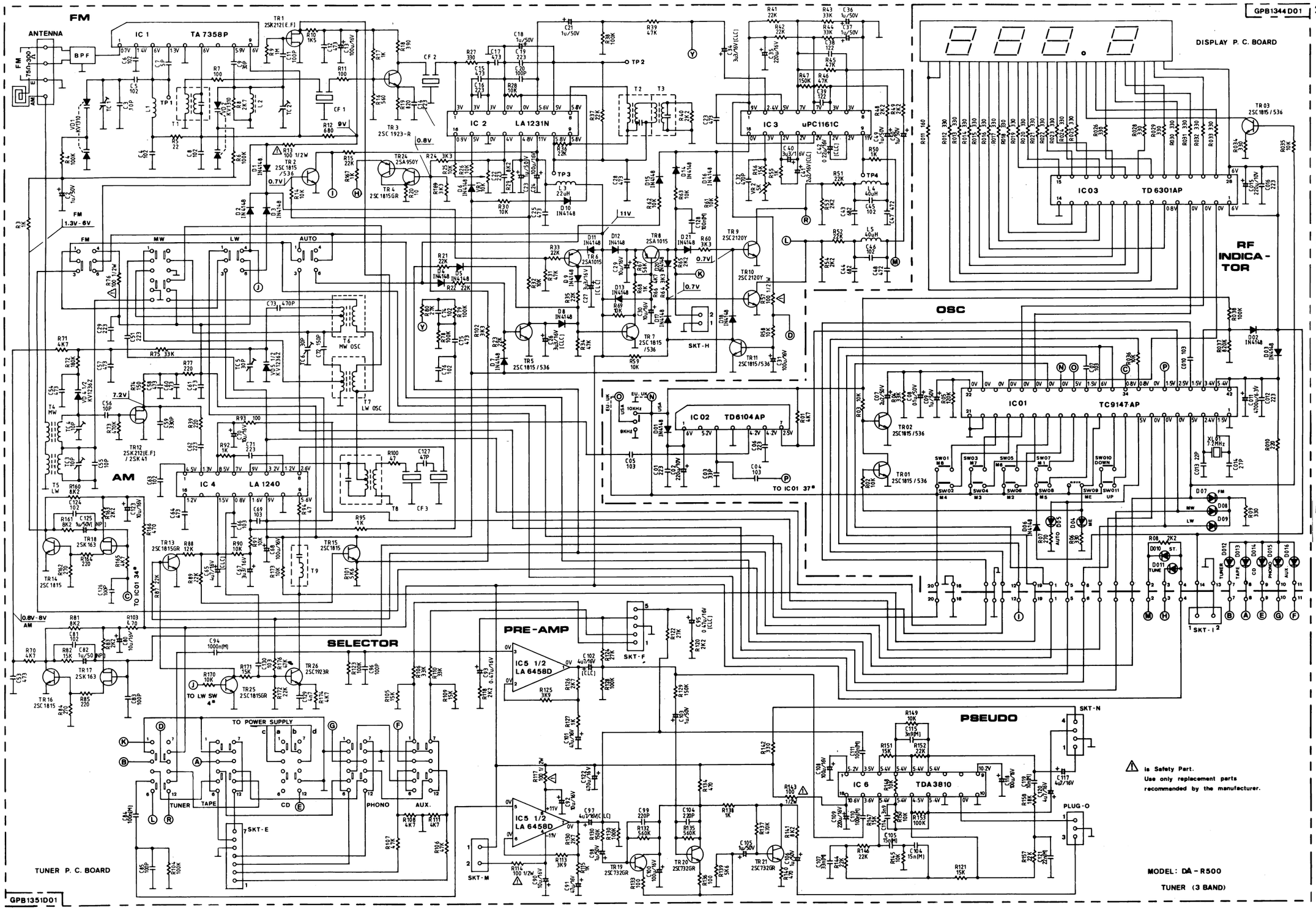

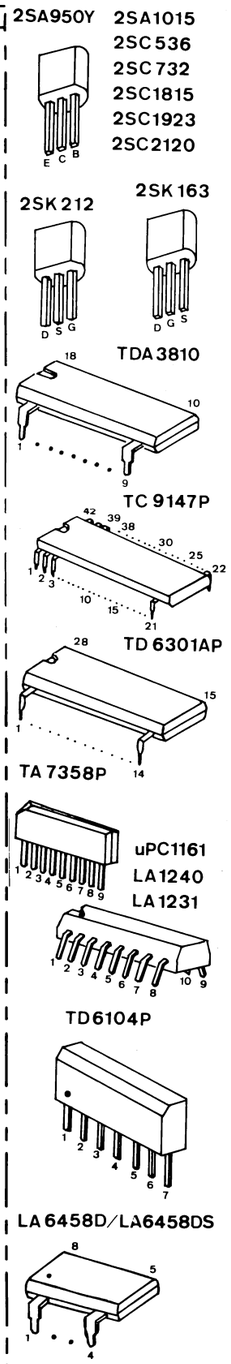

10. WIRING DIAGRAM

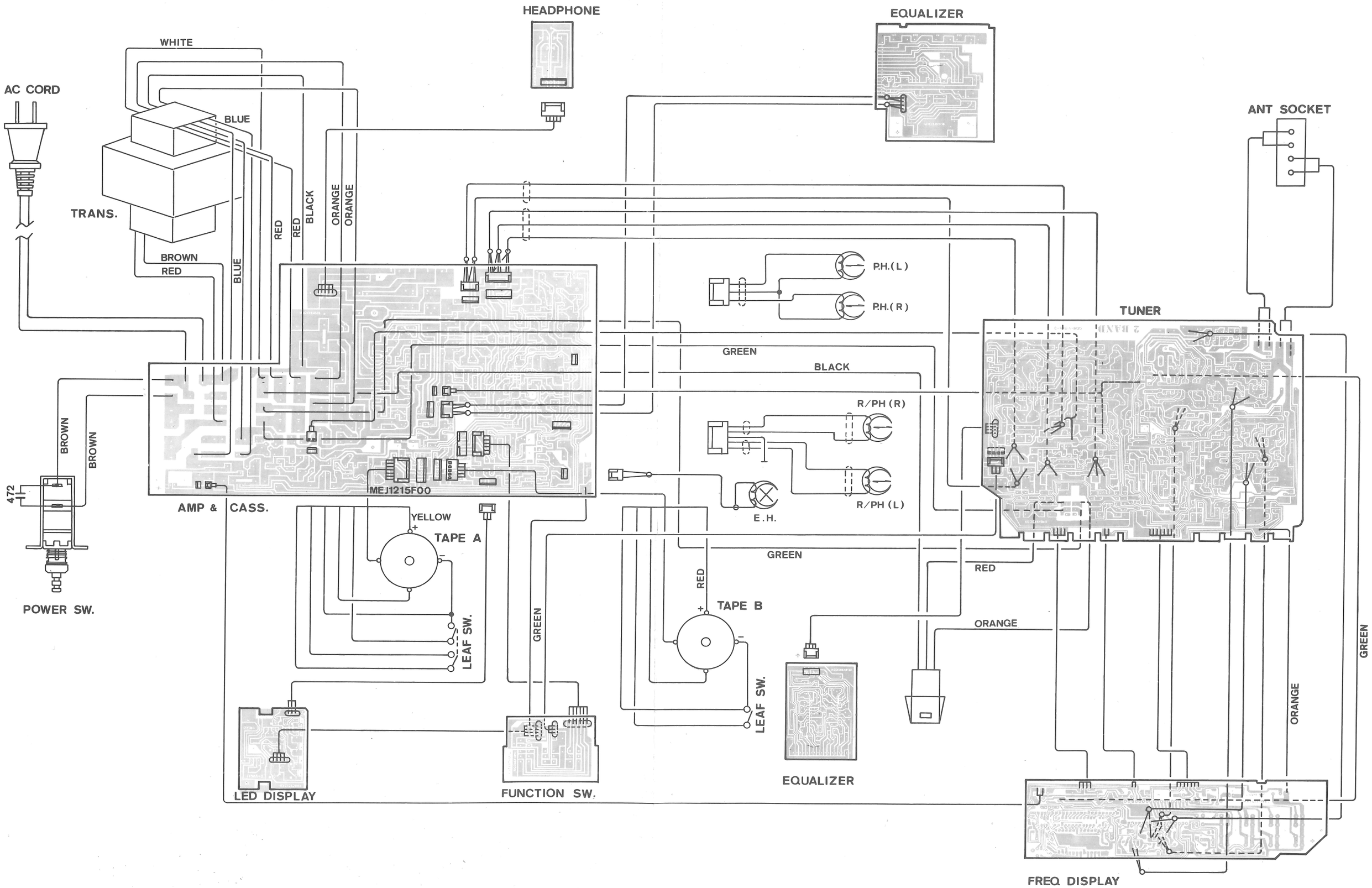

11. PACKING LIST

No.	Stock No. (J)	Stock No. (T)	Description
1	58317900	MPW1086D03	Poly Bag For Set
2	58318000	MPP1268D02	Styrofoam Packing For Set
3	58317800	MPC1469D01	Carton Case

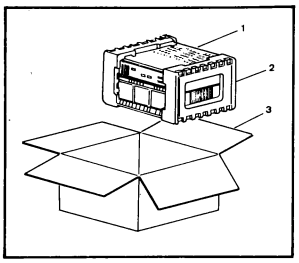

12. ACCESSORY LIST

No.	Stock No. (J)	Stock No. (T)	Description
1.	58318300	MEA1017D02	AM Loop Antenna
2.	58318400	MEJ1267D03	AM Antenna Wire
3.	58318100	MDL2330D00	Instruction Book

COMPACT DISC PLAYER

SANSUI CD-R500

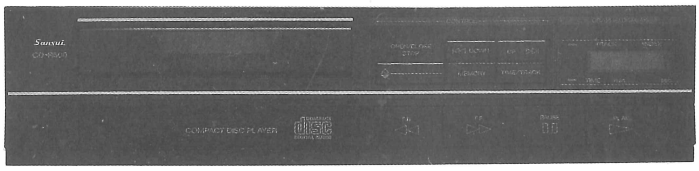

Specifications

Typical Audio Performance

Number of Channels..... 2
Frequency Range..... 20 - 20,000 Hz, ± 0.3 dB
Dynamic Range..... 96 dB
Signal-to-Noise Ratio..... 96 dB
Channel Separation..... 94 dB (at 1000 Hz)
Total Harmonic Distortion 0.003% (at 1000 Hz)
Wow and Flutter..... Quartz crystal precision
D/A Conversion..... 16-bit equivalent through quadruple oversampling with digital filter and two 14-bit D/A converters
Error Correction System.... Cross interileaved Reed Solomon Code (CIRC)
Audio Output Level..... 2V rms

Optical Readout System

Laser..... semi-conductor AlGaAs
Wave length..... 800 nm

Signal Format

Sampling Frequency..... 44.1 KHz
Quantization..... 16 bit linear/channel

Power Supply

Mains Voltage..... See the type plate at the rear of the player
Power Consumption..... 10 W
Safety Requirements..... IEC

Cabinet, general

Materia/finish..... Plastic and polystyrene with printing
Dimensions..... 340 mm W(13-1/4")
350 mm D (13-3/4")
82 mm H (3-1/4")
Weight..... 3kg (6.6 lbs)

Cautions concerning handling of the laser

A. Cautionary points to minimize danger.

1. Since the laser beam is extremely dangerous when viewed directly at its source, do not look directly at the laser pick-up assembly when the laser beam is being output. Additionally, even when viewing the laser beam only, be sure that you are at least 30 cm away from it when it is in operation.
2. When the laser beam is in operation, do not bring any part of your body into direct contact with or inclose proximity to the convex lens.

B. The following label has been affixed to the unit, listing the proper procedure for working with the laser beam.

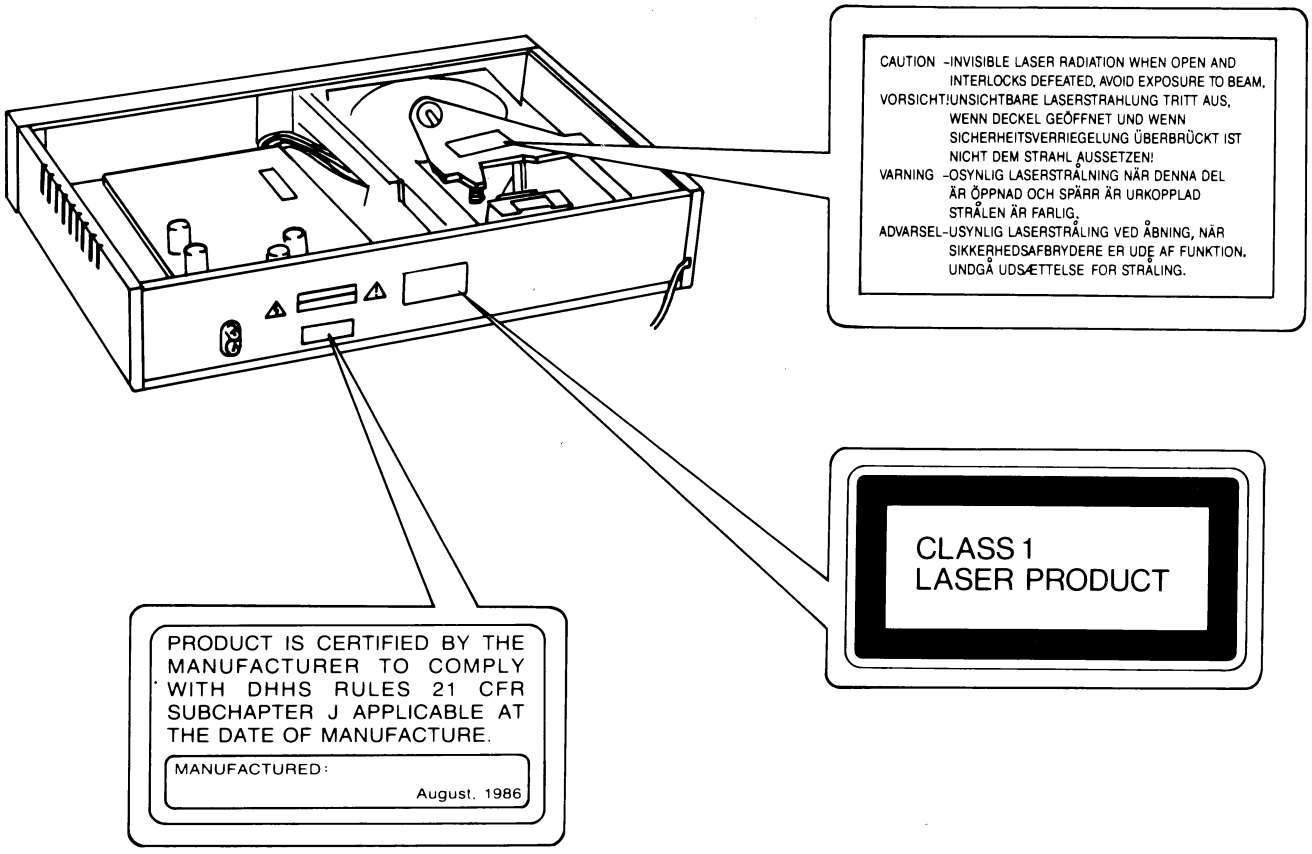

(U.S.A. only)

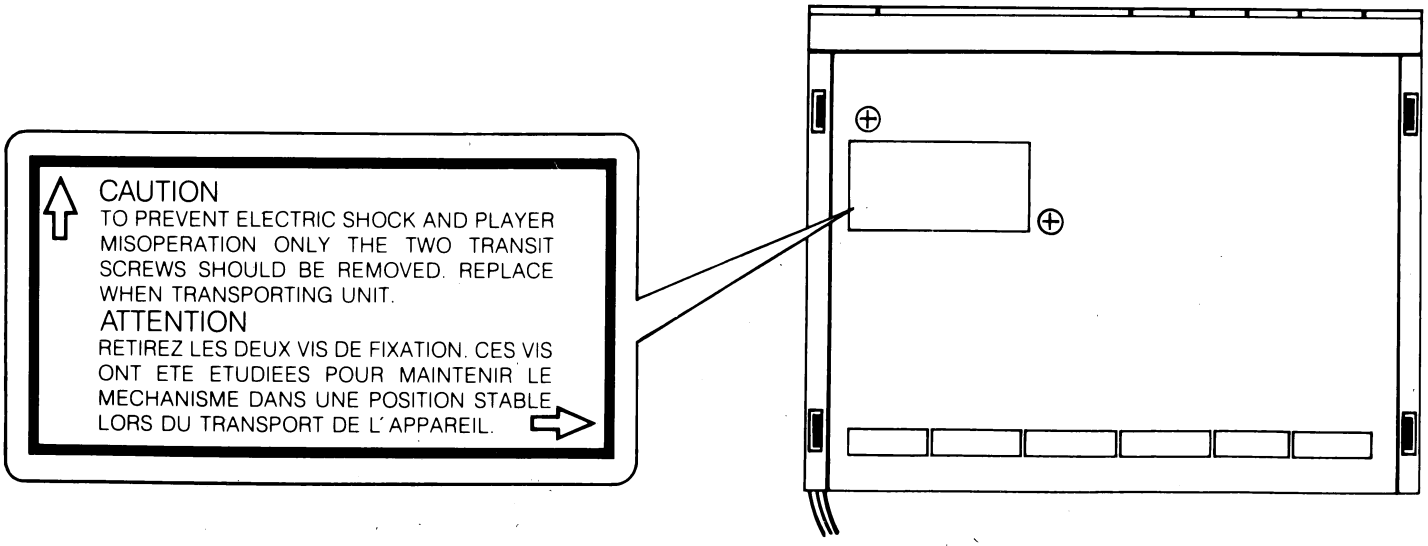

1. SERVICING HINTS

For servicing hints of the CD mechanism and the servo + preamplifier PCB see Service Manual C.D.M.-2

The set consists of various MOS ICs.
Because in general ICs are very sensitive to overloading and too high voltages, the highest care should be taken during servicing.
See the information enclosed in the packaging of the ICs for further instructioins.

In the set chip components have been applied.
For disassembly and assembly of chip components see the figure below.

The disc should always rest properly on the turntable.
To achieve this a disc hold-down has been mounted in a bracket of the tray mechanism.
If the tray mechanism has to be disassembled for servicing, one or more than one seperate disc hold-downs should be used.
The set can function normally then.
Code number of the disc hold-down is 4822 532 60906.

When the tray mechanism has been disassembled the player can be prepared for measurements via interconnection of connector pins 22-2 (⊥) and 22-3 (Sin) on the control + display PCB.

SERVICE AIDS

Audio test disc	4822 397 30085
Disc without errors + disc with DO errors, black spots and fingerprints	4822 397 30096
Torx screwdrivers	
Set (straight)	4822 395 50145
Set (square)	4822 395 50132
Disc hold-down	4822 582 60906
7th order filter	4822 395 30204

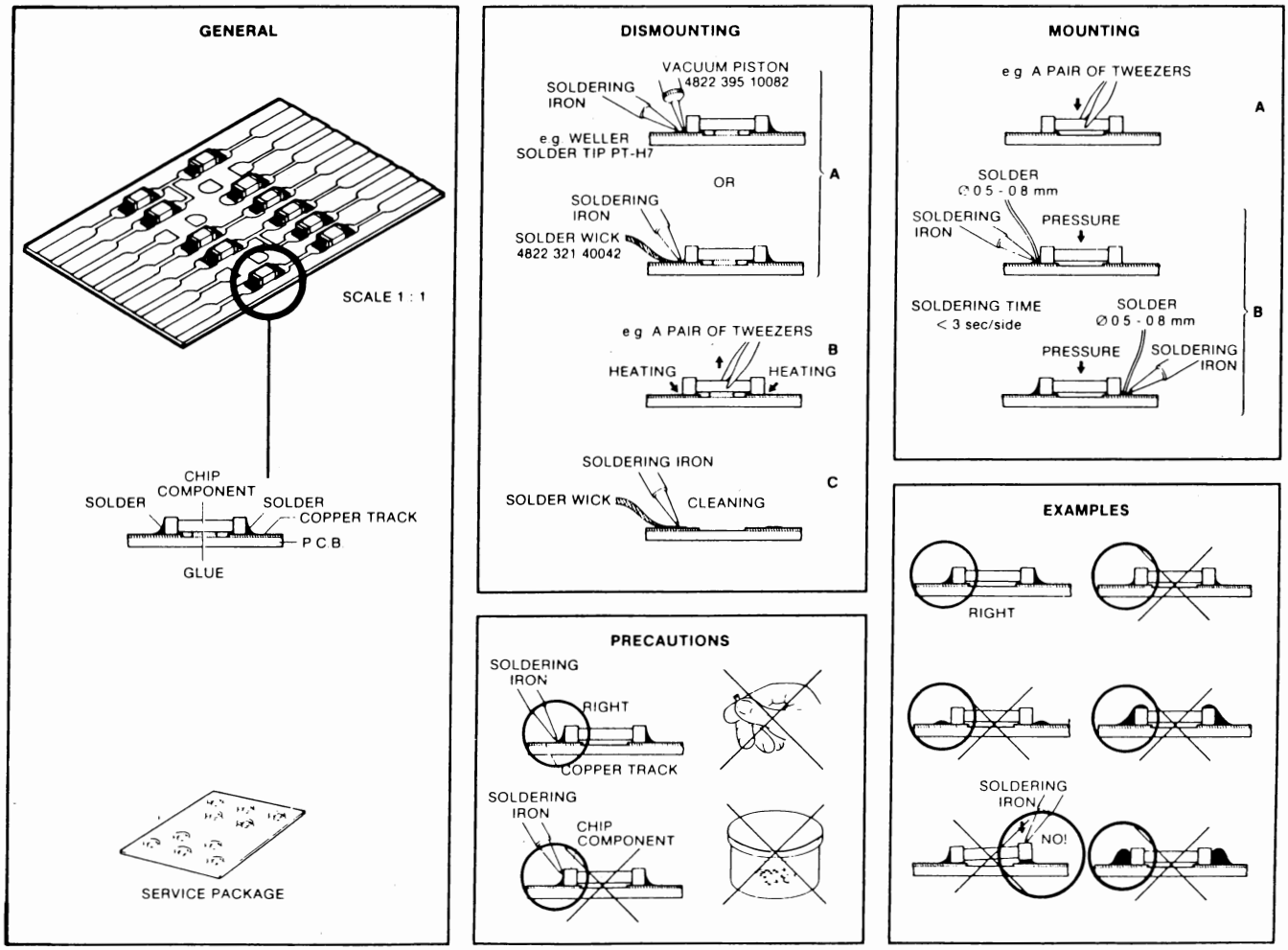

Fig. 1-1

DISASSEMBLY OF TOP COVER

- Remove the 4 screws out of side walls of top cover.
- Remove screw at rear of top cover.
- Take top cover cover from set.

REPLACEMENT OF GLASS FUSE 1701

- Remove top cover.
- The glass fuse is situated on the mains switch PCB in the left-hand rear corner of the set.

REPLACEMENT OF TRANSFORMER FUSE

- Remove top cover.
- Remove screening cap that has been placed over transformer.
- Now the transformer fuse is accessible.
- Reapply the screening cap after fuse exchange.

SERVICING OF THE FRONT PANEL

Disassembly of front panel

- Remove top cover.
- Remove the 3 fixing screws at upper side of front panel.
- Now the front panel can be taken off.
- Ensure during mounting that the 3 bosses of the set frame engage with the appropriate holes of the front panel.

Disassembly of control + display PCB

- The control + display PCB can be taken out after removal of the 5 screws.

SERVICING OF THE DECODER + POWER SUPPLY PCB

- Remove top cover.
- Remove the 2 screws on the decoder + power supply PCB.
- Remove the 2 screws at the upper side of the cooling bracket.
- Remove the screw in the backcover for fixation of the 2 CINCH sockets.
- After the connectors have been disconnected the decoder + power supply PCB can be slid forwards and be taken out of the player.

SERVICING OF THE SERVO + PREAMPLIFIER PCB
(see Fig.**1-2**)

- Remove top cover.
- Remove the front panel.
- Remove screw 4N × 10 and ring item no. 222 (see exploded view of cabinet) at the rear of the tray mechanism.
- Now the tray mechanism/CDM/servo + pre-ampl. PCB assy can be taken out of the frame and can be placed vertically in the appropriate servicing supports in the frame (see Fig 1-2).
- In this way measurements and adjustments can be performed on the servo + preampl. PCB.
- See Service Manual C.D.M. -2 for measurements and adjustments on the servo + preampl. PCB.
- Ensure during mounting of the tray mechanism/CDM/servo + preampl. PCB assy that the suspension rubbers and springs item no. 218 and 219 are present (see exploded view of cabinet).

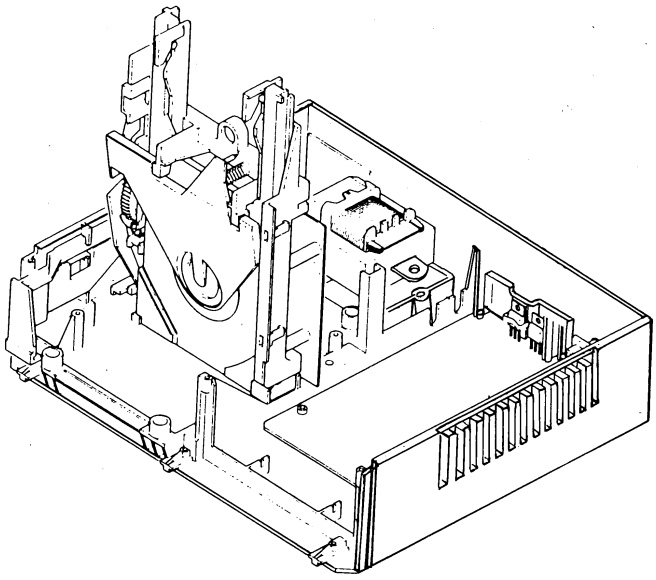

Fig.**1-2**

SERVICING OF THE TRAY MECHANISM/CDM/SERVO + PREAMPL. PCB ASSY

- Disassemble top cover.
- Disassemble front panel.
- Remove screw 4N × 10 and ring item no. 222 (see exploded view cabinet) at the rear of the tray mechanism.
- Now the assy can be taken out of the set after the connectors have been disconnected.
- Remove screw N4 × 8 and bracket item no. 501 (see exploded view of tray mechanism).
- The CDM + servo + preampl. PCB is kept in place by a boss of the tray mechanism. If this boss, in the region of the foil connector is bent away the CDM + servo + preampl. PCB can be taken out of its support points of the tray mechanism.
- Ensure during mounting of the CDM/servo + preampl. PCB in the tray mechanism that the mechanical brake item no. 123 (see exploded view of tray mechanism) is positioned properly.

SERVICING OF THE TRAY MECHANISM

Disassembly of the tray mechanism

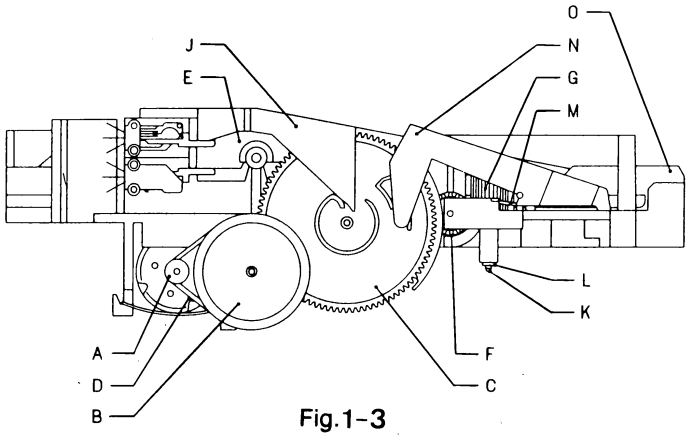

Fig.**1-3**

- Remove disc hold-down holder J by disassembling coil spring at rear. Then holder J can be taken out of its hinge points.
- Remove belt D.

- Disassemble pulley B after clamping ring on shaft has been removed.
- Remove lifting bracket N by elevating lug M and sliding bracket out of its shaft guiding.
- Remove gearwheel G by removing shaft K after ring L has been taken away.
- Now disc carrier O can be taken out of the holder by lifting it at the front and sliding it out of the guiding.
- Next cog wheel C, switch bracket E and gearwheel F can be removed successively.
- The tray motor with belt wheel A can be taken out by removing the spring.

Assembly of tray mechanism

- Place disc carrier O in guiding and slide it in place (= disc carrier in position "close").
- Mount gearwheel F.
- Apply switch bracket E. The left-hand boss of the bracket should be positioned between the 2 switches.
- Ensure that the aperture in gearwheel F is vertical (see Fig.1-3) and apply cog wheel C in the way described in Fig.1-4.

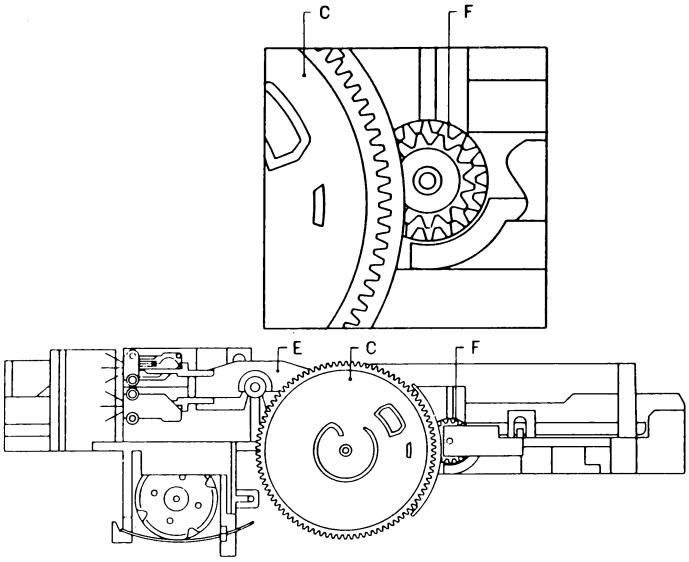

Fig.1-4

- Turn cog wheel C counterclockwise till its final position and ensure that the boss of switch bracket E engages with the guiding at the rear of the cog wheel. Turn the cog wheel counterclockwise and clockwise and check if both switches are switched on alternately.
- Turn cog wheel C counterclockwise so that the upper switch is operated and mount pulley B in this position. Next apply the clamping ring.
- Mount gearwheel G and apply shaft K and clamping ring L. Ensure that gearwheel G is positioned before shaft and clamping ring are mounted.
- Apply lifting bracket N. Ensure that the fork at the right of the lifting bracket encloses the guide rail of the tray.
- Mount the motor with pully A and apply belt D.
- Next hold-down holder J and the compression spring can be mounted.
- Check after mounting the working of the tray mechanism by turning pulley B counterclockwise and clockwise.

2. ELECTRICAL MEASUREMENTS AND ADJUSTMENTS

For measurements and adjustments on the CD mechanism and the servo + preampl. PCB see the CDM-2 Service Manual

Specification measurement

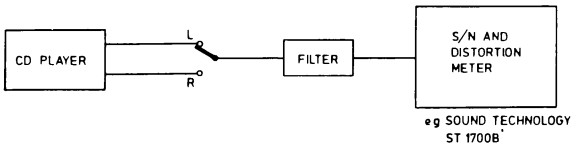

Fig. 2-1

To measure the specification use can be made of audio test disc 4822 397 30085.
Use 7th order filter 4822 395 30204 (see Fig. 1-4) to measure:
- Total harmonic distortion (THD)
- Intermodulation distortion
- Signal-to-noise ratio (S/N)

Changing the transformer connections

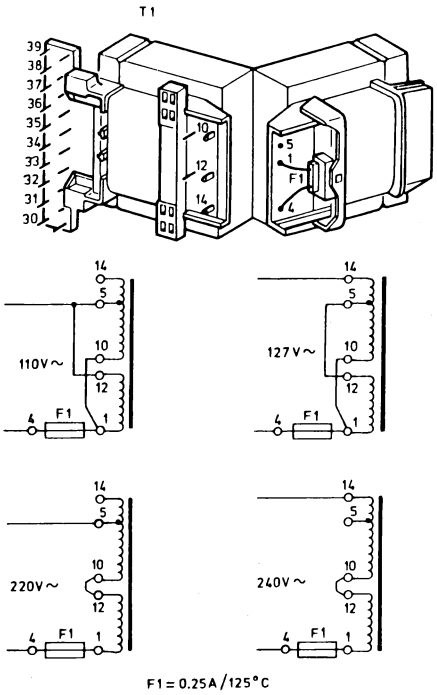

Fig. 2-2

If the set should be connected to a mains voltage that deviates from the voltage mentioned on the type plate, the transformer connections should be changed, as indicated in Fig. 2-2.

Attention

In case of a change to 110V or 127V the glass fuse on the mains switch PCB should be changed from 200mA-T to 400 mA-T.

DETAILED MEASURING METHOD FOR THE DECODER CIRCUIT

HINTS

Test discs

It is important to treat the test discs with great care. The disorders on the discs (black spots, fingerprints, etc.) are exclusive and unambiguously positioned. Damage may cause additional drop-outs etc. rendering the intentional errors no longer exclusive. In that case it will no longer be possible to check e.g. the good working of the track detectors.

Measurements on op-amps

In the electronic circuits op-amps have been used frequently. Some of the applications are amplifiers, filters, inverters and buffers.

In those cases where in one way or the other feedback has been applied the voltage difference at the differential inputs converges to zero. This applies to both DC and AC signals. The cause can be traced to the properties of an ideal op-amp ($Z_i = \infty$, $G = \infty$, $Z_o = 0$). If one input of an op-amp is directly connected to ground it will be virtually impossible to measure at the inverting and the non-inverting inputs. In such cases only the output signal will be measurable.

That is why in most cases the AC voltage at the inputs will not be given. The DC voltages at the inputs are equal.

Stimulation with "0" and "1"

During troubleshooting sometimes certain points should be connect to ground or supply voltage. As a result certain circuits can be brought in a desired state thus shortening the diagnosis time. In a number of cases the related points are outputs of op-amps. These outputs are short-circuit-resistant, i.e. they can be brought to "0" or ground without problems. **The output of an op-amp, however, should never be connected directly to the power supply voltage.**

Measurements on microprocessors

Inputs and outputs of microprocessors should **never** be connected directly to the power supply voltage. The inputs and outputs should only be brought to "0" or ground if this is stated explicitly.

Measurements with an oscilloscope

During measurements with an oscilloscope it is recommended to measure with a 1:10 test probe, since a 1:10 probe has a considerably smaller input capacitance than a 1:1 probe.

Selction of ground potential

It is very important to select a ground point that is as close as possible to the test point.

Conditions for injection

- Injection of levels or signals from an **external** source should **never** take place if the related circuit has no supply voltage.
- The injected levels or signals should **never** be greater than the supply voltage of the related circuit.

Continuous burning of the laser

- Bridge capacitor 2174 on the servo + preampl. PCB.
- Connect $\overline{Si}$ (= pin 20 of IC6101 on the servo + preampl. PCB) to ground.
- Switch on the supply voltage.
- Now the laser will burn continuously.

Indication of test points

In the drawings of the diagrams and the PCBs the test points have been indicated by a number (e.g. ◇12◇) to which the measuring method refers. In the measuring method below, the symbol (◇) has been omitted for the test points indicated.

GENERAL CHECKPOINTS

In the detailed measuring method below a number of general conditions, required for a properly functioning set, will not be mentioned. Before the detailed measuring method is started, these general points should first be checked.

a. Ensure that disc and objective are clean (remove dust, fingerprints, etc.) and work with undamaged discs.
b. Check if all supply voltages are present and if they have the correct values.
c. Check the good working of the two microprocessors by means of their built-in test programme and servicing programme.

Method:

Self-test of the servo μP

With the self-test the following parts of the μP are tested:
- RAM
- ROM
- TIMER
- serial I/O interface
- I/O gates

- Interrupt the I²C connection on connector 35-2 on the servo + preampl. PCB.
- Unsolder pins 1, 7, 26 and 27 of the servo μP.
- Render pin 2 of the servo μP "low" (ground) and switch on the supply voltage.
- The test starts if pin 2 is rendered "high" again (interrupt the connection to ground).
- If all tests are positive, pin 1 of the servo μP will go low within 1s.

Self-test of the control and display μP

With this self-test the following parts of the μP are tested:
- RAM
- ROM
- TIMER
- serial I/O interface
- I/O gates

- Interrupt the I²C connection on connector pin 21-4 on the control + display PCB.
- Render pin 2 of the control display μP "low" (ground) and switch on the supply voltage.
- The test starts if pin 2 is rendered "high" again (= interrupt the connection to ground).
- If all tests are positive, pin 1 of the control + display μP will go "low" again within 1s.

Initiation of the servicing programme of the μP

- **Servicing position "0"**
  Simultaneously depress the PREVIOUS, NEXT and TIME/TRACK keys. Keep these three keys depressed while the mains voltage is switched on.

  This is the STAND-BY mode, "0" appears on the display.

  In this state it is possible to move the arm by means of the SEARCH FORW and SEARCH REV keys with a minimum torque to the outside and the inside resp. This enables a check of the free motion of the arm across the disc.

- **Servicing position "1"**
  From servicing positon "0" the player can be brought in servicing position "1" by depressing the NEXT key.

  In this state the laser emits light and the objective starts to focus. When the focal point has been reached, "1" appears on the display.

  When **no** disc has been inserted the objective goes 16 × to and fro. Then the player reassumes servicing position "0".

  As in servicing position "0" the arm can be moved across the diameter of the disc by means of the SEARCH FORW and SEARCH REV keys.

- **Servicing position "2"**
  To be reached by depressing the NEXT key after servicing position "1" has been reached.

The turntable motor starts to run

On the display appears "2"

In preparation of the transition to servicing position "3" the arm is sent to the centre of the disc

- **Servicing position "3"**
  To be reached by depressing the NEXT key after servicing position "2" has been reached.

  The radial control is switched on. The subcode information is ignored. $\overline{\text{MUTE}}$ is high so that the music information **is released.**

On the display appears "3"

(Dependent on the lenght of the lead-in track music will be reproduced after approx 1 min.)

In this state it is possible to move the arm by means of the SEARCH FORW and the SEARCH REV keys to the outside and to the inside resp. Now the motion is controlled by the μP and the arm moves by steps of 64 tracks as long as the key is depressed.

If one of the servicing positions1,2 or 3 is disturbed (e.g. braking or removing the disc) the player reassumes servicing position "0".

The servicing programme can be left by switching the mains switch (POWER ON/OFF) off and on. (Hardware reset).

I DEMOD IC

- Check the **motor speed.**
  See "turntable motor control" in C.D.M.-2 Service Manual, section III.
- Check the **HF signal** on **test point 65 (eye pattern).**
- Insert a disc.
- The HF signal should be present and be stable in the PLAY mode and in:
  SERVICING POSITION 3 after the run-in track has been read.
- In SERVICING POSITION 2 and during reading of the lead-in track the RF signal is not stable.

Position of oscilloscope 0,5 μs/DIV

Amplitude ≈ 1,5V_{pp}

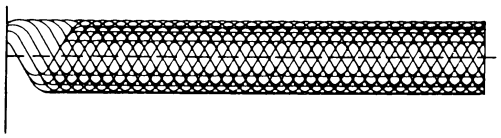

- Check the **HFD signal** on **test point 97**
- Insert a disc.
- In the PLAY mode and in SERVICING POSITION 3 the HFD signal is "high"; however, minor pulses may be present and in cause of disorders on the disc.
- In SERVICING POSITION 2 and during playback of track no. 15 of test disc 5A HFD pulses are visible.

Position of the oscilloscope 5ms/DIV

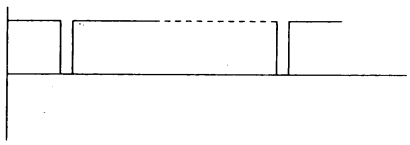

- Check the **$\overline{\text{MUTE}}$ signal** on **test point 98**
- Insert a disc.
- In the PLAY mode or in SERVICING POSITION 3 in the $\overline{\text{MUTE}}$ signal is "high.
- The $\overline{\text{MUTE}}$ signal is "low" in SERVICING POSITIONS 0, 1 and 2, in th STAND-BY (only mains switch depressed) and PAUSE modes and during jumping to a track after command NEXT or PREVIOUS.
- Check the **clock signal** on **test point 71**
- Insert a disc.
- In the Stand-by mode (only mains switch depressed) the frequency of the clock signal is 1,88 MHz.
- In the play mode or in SERVICING POSITIONS 2 or 3 the frequency of the clock signal is 4,32 MHz.

Remark: In SERVICING POSITION 2 the clock signal is unstable.

- Check the **timing signals** destined for the **ERCO IC.**
- Insert a disc.
- Bring the player in one of the following positions SERVICING POSITION 2 or 3 or the PLAY mode

Remark: In SERVICING POSITION 2 the timing signals are unstable.

- Trigger an oscilloscope with the **FSDE signal** on test point 72.
- Check signals
  FSDE on test point 72
  $\overline{\text{SSDE}}$ on test point 76
  $\overline{\text{CLDE}}$ on test point 77

and their interrelations

Position of the oscilloscope 20μs/DIV
0 = FSDE, tp 72; 1 = $\overline{\text{SSDE}}$, tp 76; 2 = $\overline{\text{CLDE}}$, tp 77

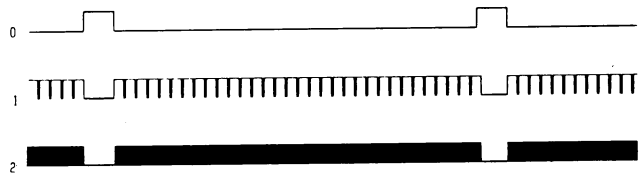

Position of the oscilloscope 1 μs/DIV
0 = FSDE, tp 72; 1 = $\overline{\text{SSDE}}$, tp 76; 2 = $\overline{\text{CLDE}}$, tp 77

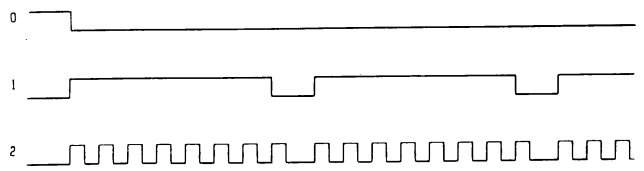

Remark: The repetition time of the FSDE signal on tp 72 is in the Stand-by mode and in SERVICING positions 0 and 1 : 312 μs in the PLAY mode and in SERVICING POSITIONS 2 and 3 : 136 μs

- Check the **DADE signal** on test **point 78**
- Insert a disc.
- In the PLAY mode or in SERVICING POSITION 3 activity should be present at test point 78 after the lead-in track has been read.

- Check the **subcode clock signals**
- Insert a disc.
- Bring the player in one of the following positions: SERVICING POSITION 3 or PLAY mode.
- Trigger an oscilloscope with the FSDE signal on test point 72.
- Check signals.
  FSDE on test point 72
  SWCL/QCLOCK on test point 73
  SBCL on test point 74

and measure their interrelations

Positions of the oscilloscope 0,1 ms/DIV

0 = FSDE tp 72
1 = SWCL/QCLOCK tp 73
2 = SBCL tp 74
3 = SBCL tp 74

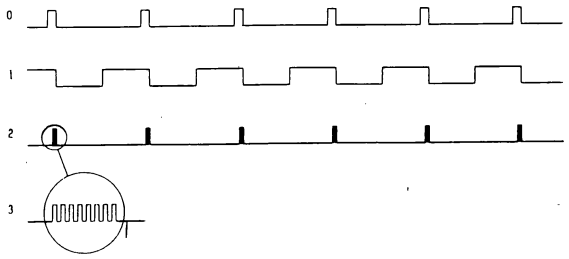

Remark: The repetition time of the FSDE signal on tp 72 is: in the STAND-BY mode and in SERVICING POSITIONS 0 and 1 : 312 μs in the PLAY mode and in SERVICING POSITIONS 2 and 3 : 136 μs

- Check the **subcode data signals**
- Insert a disc.
- In the PLAY mode or in SERVICING POSITION 3 activity should be present at the following test points.

  S-DATA test point 75
  Q-SYNC test point 95
  Q-DATA test point 96

II ERCO IC

- Check the **timing signals coming** from the **DEMOD IC**
- SEE SUB "I DEMOD IC"
  "Check the timing signals destined for the ERCO IC'.

- Check the **DADE signal** on **test point 78**
- See sub "I DEMOD IC"
  'Check the DADE signal on test point 78'

- Check the **CLOX signal** on **test point 94**
- In Stand-by mode (only mains switch depressed) the frequency of the CLOX signal should be 4,2336 MHz.

- Check the **timing signals** destined for the **CIM IC**
- Bring the player in the Stand-by mode (only mains switch depressed).
- Trigger an oscilloscope with the FSEC signal on test point 79.

- Check signals
  FSEC on test point 79
  $\overline{\text{CLEC}}$ on test point 80

and their interrelations

Position of the oscilloscope 20 μs/DIV

0 = FSEC tp 79
1 = $\overline{\text{CLEC}}$ tp 80

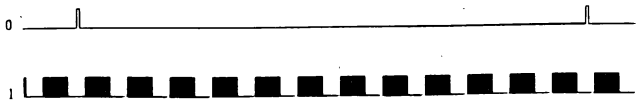

Remark: The repetition time of the FSEC signal is 136 μs.

- Check the **$\overline{\text{MUTE}}$ signal** on **test point 98**
- See sub "I DEMOD IC"
  'Check the $\overline{\text{MUTE}}$ signal on test point 98'

- Check the **DAEC signal** on **test point 81**
- Insert a disc.
- In the PLAY MODE or in SERVICING POSITION 3 activity should be present at test point 81 after the reading of the lead-in track.

- Check the **MCES signal** on **test point 66**
- In the Stand-by mode the MCES signal is as indicated in the figure below.
  Position of the oscilloscope 50 μs/DIV

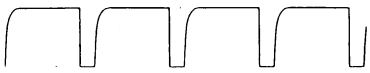

Remark:
The repetition time of the MCES signal is 140 μs.

- Insert a disc.
- In the PLAY mode or in SERVICING POSITION 3 the MCES signal is as indicated in the figure below.

Remark: The repetition time of the MCES signal is 140 μs.
Duty cycle is 50%
Also see "Measurement of turntabel motor control" in C.D.M.-2 Service Manual, section III.

- Check the **UNEC signal** on **test point 82**
- Insert test disc 5A.
- During playback of track no. 17 UNEC flags should briefly be present at test point 82.
  The UNEC flags are also present in case of soft braking of the disc and during fast forward or fast reverse (SEARCH FORW., SEARCH REV.).

Remark: If the UNEC signal at test point 82 remains continuously "high", either the DEMOD IC or the ERCO IC or the RAM IC is defective.

III CIM IC

- Check the **CLOX signal** on **test point 94.**
- See sub "II ERCO IC".
  'Check the CLOX signal on test point 94'

- Check the **timing signals coming from the ERCO IC.**
- See sub "II ERCO IC".
  'Check the timing signals destined for the CIM IC'

- Check the **DAEC signal on test point 81.**
- See sub "II ERCO IC".
  'Check the DAEC signal on test point 81'

- Check the **UNEC signal on test point 82.**
- See sub "II ERCO IC".
  'Check the UNEC signal on test point 82'

- Check the **timing signals** destined for the **FIL IC.**
- Bring the player in the Stand-by mode (only mains switch depressed).
- Trigger an oscilloscope with the STR1 signal on test point 84.
- Check signals
  $\overline{CLEC}$ on test point 80
  $\overline{CLCF}$ on test point 85
  STR1 on test point 84

and their interrelations

Position of the oscilloscope 5 μs/DIV

0 = $\overline{CLEC}$ tp 80
1 = $\overline{CLCF}$ tp 85
2 = STR1 tp 84

Remark: The repetition time of the STR1 signal is 22 μs (f = 44,1 kHz).

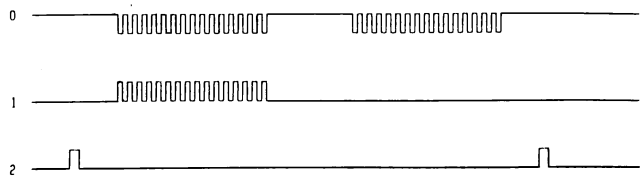

- Check the **DLCF signal** on test **point 86** and the **DRCF signal** on test **point 87**
- Insert a disc.
- In the PLAY mode and in SERVICING POSITION 3 activity should be present at test points 86 and 87 after reading of the lead-in track.

IV FIL IC

- First check all signals round the CIM IC (see "III").

- Check the timing signals
- Bring the player in the Stand-by mode (only the mains switch depressed).
- Trigger an oscilloscope with the STR1 signal at test point 84.
- Check signals

STR1 on test point 84
$\overline{CLCF}$ on test point 85
$\overline{CLFD}$ on test point 90
LAT on test point 93

and their interrelations.

Position of the oscilloscope 5μs/DIV

0 = STR1 tp 84
1 = $\overline{CLCF}$ tp 85
2 = $\overline{CLFD}$ tp 90
3 = LAT tp 93

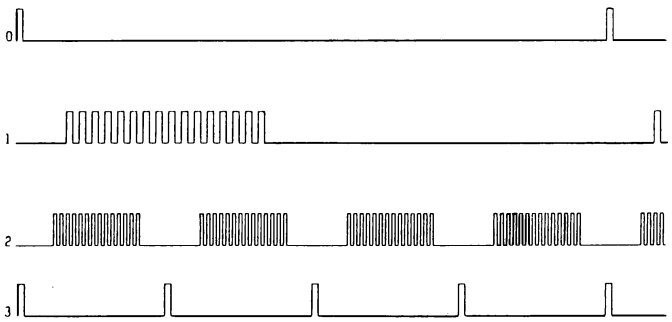

Remark: The repetition time of the LAT signal is 5,5 μs. (f = 176,4 kHz).

- Check the **DLFD signal** on **test point 91** and the **DRFD signal** on **test point 92**
- Insert a disc.
- In the PLAY mode and in SERVICING POSITION 3 activity should be present at test point 91and 92 after reading of the lead-in track.

V DAC IC

- First check all signals round the FIL IC, see IV.

- Check the output of the OP-AMP after the DAC IC.
- Insert a disc.
- In the PLAY mode and in SERVICING POSITION 3 the analog (= music) signal should be present on the output of the OP-AMP after reading of the run-in track.

VI DEEMPH CIRCUIT

- Insert test disc 5.
- During playback of track no. 14 (recorded without PREEMPH) the $\overline{\text{DEEMPH}}$ signal on connector 43-2 should be "high".
- During playback of track no. 15 (recorded with PREEMPH) the $\overline{\text{DEEMPH}}$ signal on connector 43-2 should be "low".
- During playback of track no. 14 the analog signal should be present at the source of 6320 (to be measured at resistor 3354, tp 67) and 6321 (to be measured at resistor 3355, tp 68).
- During playback of track no. 15 the analog signal should be 0 V at the source of 6320 (to be measured at resistor 3354) and 6321 (to be measured at resistor 3355).

VII KILL CICUIT

- During switching on and off of the mains voltage the signal on the collector of 6327 (to be measured on a jumper, tp 69) should be as indicated in the figure below.

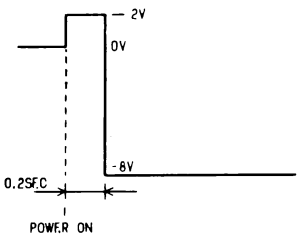

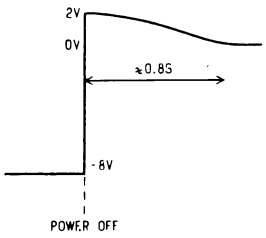

3. EXPLODED VIEW OF LOADING ASS'Y AND PARTS LIST

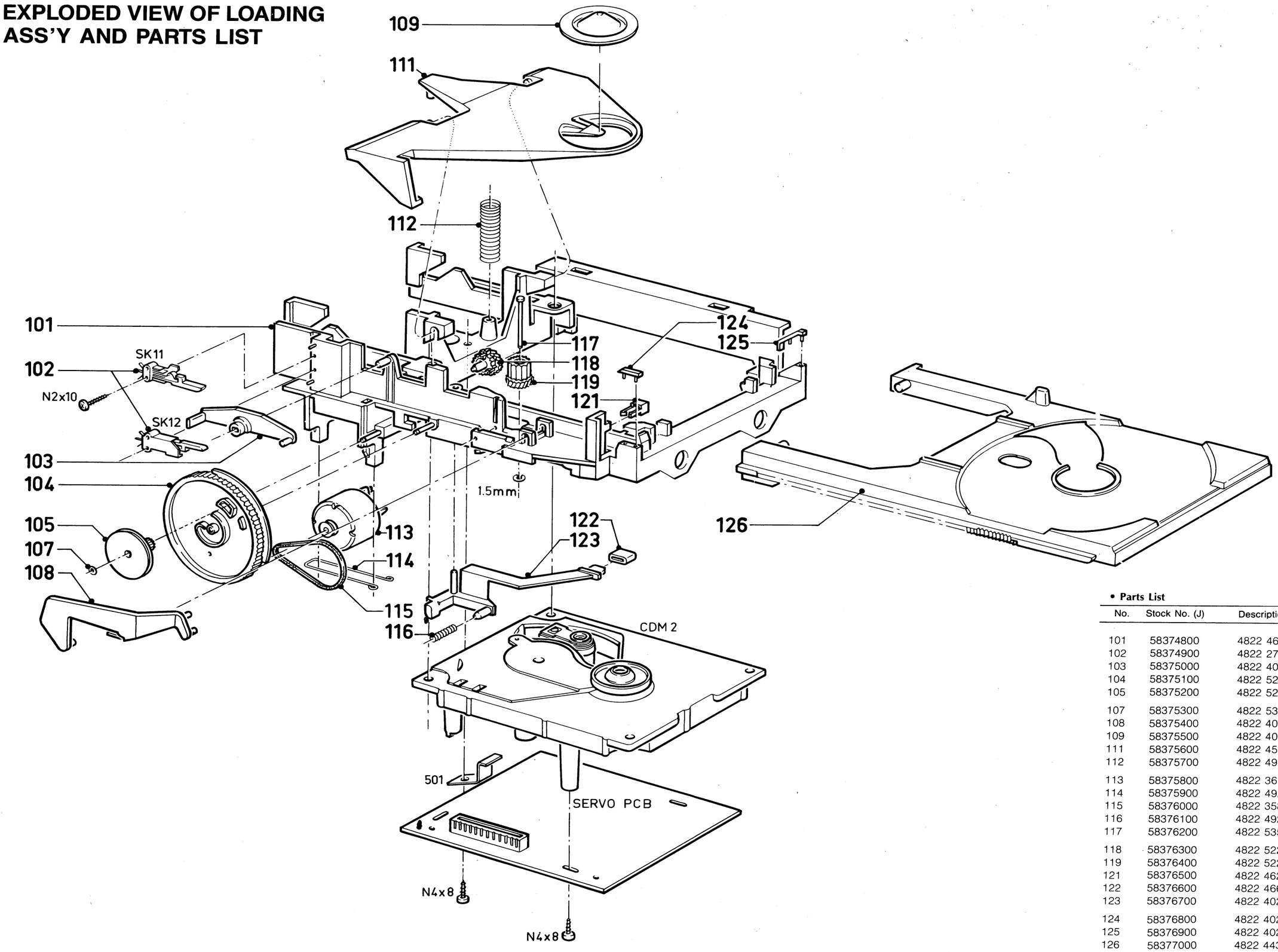

• **Parts List**

No.	Stock No. (J)	Description	
101	58374800	4822 464 50401	CHASSIS
102	58374900	4822 276 11277	2 × SWITCHES
103	58375000	4822 402 50208	SWITCH BRACKET
104	58375100	4822 522 31905	CAM WHEEL
105	58375200	4822 528 81046	BELT WHEEL
107	58375300	4822 532 50262	RING
108	58375400	4822 402 40045	LEVEL
109	58375500	4822 402 20096	DISC
111	58375600	4822 459 80268	CLAMPER
112	58375700	4822 492 51725	SPRING
113	58375800	4822 361 20576	MOTOR + WIRE
114	58375900	4822 492 63218	WIRE SPRING
115	58376000	4822 358 20116	BELT
116	58376100	4822 492 51726	SPRING
117	58376200	4822 535 91857	PIN
118	58376300	4822 522 31907	GEAR
119	58376400	4822 522 31908	GEAR
121	58376500	4822 462 71375	GUIDES
122	58376600	4822 466 40176	RUBBER
123	58376700	4822 402 30143	BRAKE BRACKET
124	58376800	4822 402 60928	GUIDES
125	58376900	4822 402 60927	GUIDES
126	58377000	4822 443 50633	SLIDER

4. EXPLODED VIEW OF CABINET & PARTS LIST

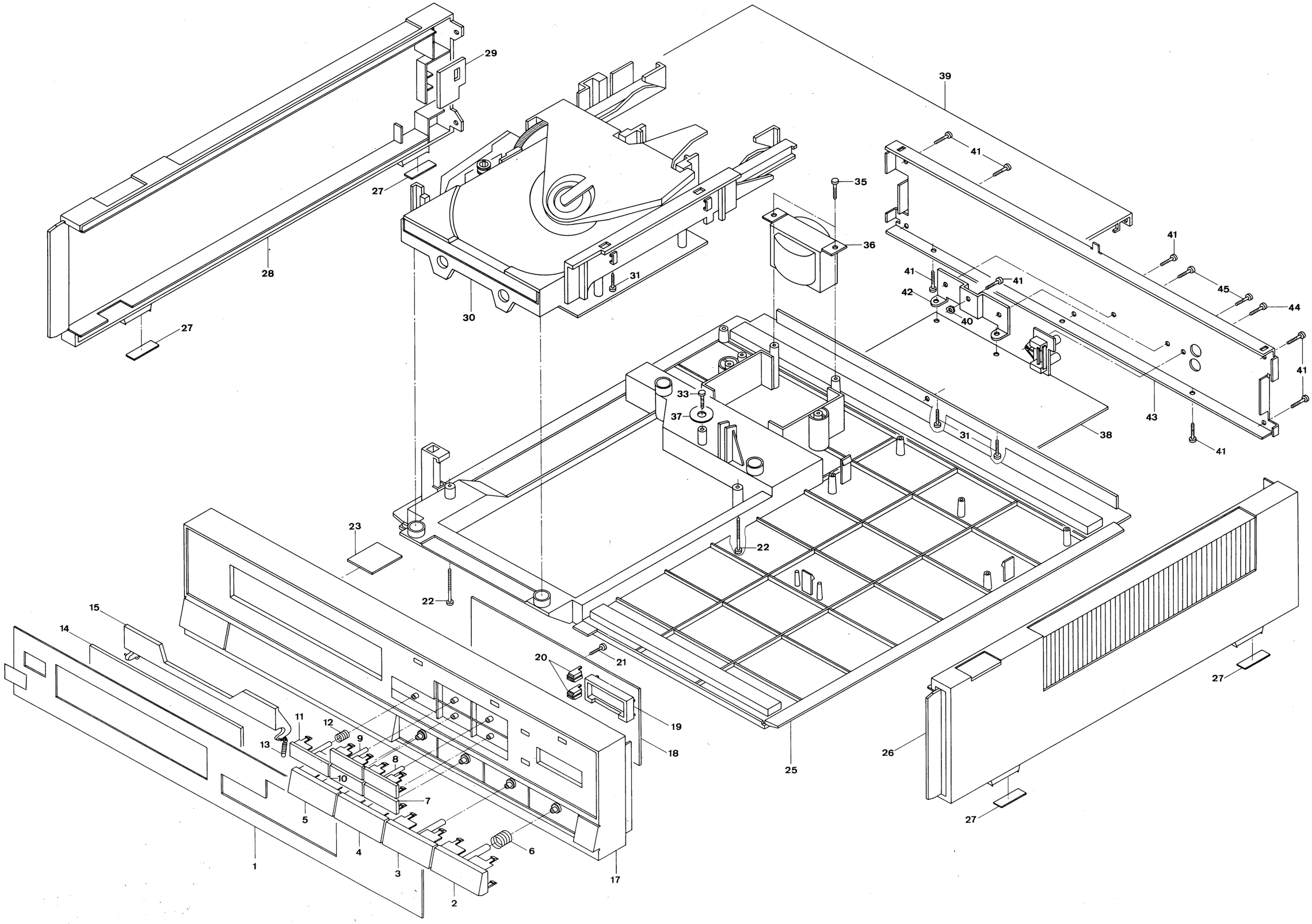

• **Parts List**

No.	Stock No. (J)	Stock No. (T)	Description	Q'ty
1	58339500	MDT1344D02	Function Plate	1
2	58339200	MDK1366D30	Knob For "PLAY"	1
3	58339100	MDK1366D29	Knob For "PAUSE"	1
4	58339000	MDK1366D18	Knob For "F.F"	1
5	58338900	MDK1366D07	Knob For "F.B"	1
6	58339900	MMS1061D03	Spring For Knob	4
7	58338600	MDK1364D25	Knob For "TIME/TRACK"	1
8	58338400	MDK1364D03	Knob For "UP"	1
9	58338500	MDK1364D14	Knob For "DOWN"	1
10	58338700	MDK1364D36	Knob For "MEMORY"	1
11	58338800	MDK1365D00	Knob For "OPEN/CLOSE"	1
12	58339800	MMS1062D00	Spring For Knob	5
13	58346300	MMS1060D17	Door Spring	1
14	58339400	MDS1215D02	CD Door Lens	1
15	58339300	MDC1309D03	CD Door	1
16				
17	58337900	MDC1305D05	Front Panel	1
18	58346400	GPB1341D11	Computer P. C. B	1
19	58339700	MSB1573D07	Display Holder	1
20	58332700	MPF1265D00	LED Spacer	2
21	58322500	5240308IO2	Screw For CPU P. C. B	1
22	58340800	5060340BO5	Screw For Side Deck	2
23	58346500	GPA1342D17	Computer LED P. C. B	1
24				
25	58338000	MDC1308D06	Bottom Board	1
26	58338200	MCD1307D09	Side Cabinet (R)	1
27	58346100	MPF1386D02	Cabinet Foot	4
28	58338100	MDC1306D02	Side Cabinet (L)	1
29	58340700	MPF1295D03	Spacer For Side Cabinet	1
30	58341100	GPA0001D09	CD P.C.B & Deck Ass'y	1
31	58326100	5270308IO5	Screw For CD Deck & CDM 2, Heat Sink & P. C. B	1
32				
33	58340300	5270310IO0	Screw For CD & Base	1
34				
35	58346600	5220310IO5	Screw For Transformer	2
36	58340900	GTP0177D05	Power transformer	1
37	58340400	MFW1080D08	Washer For CD	1
38	58341200	GPA0002D06	CD Main P. C. B Ass'y	1
39	58338300	MSB1597D07	Top Cover	1
40	58346700	MFN1002D03	Nut	1
41	58340100	5040308HO3	Screw For Rear/Side/Base, Heat Sink & IC	8
42				
43				
44	58324800	5240308HO9	Screw For RCA Jack	1
45	58319700	5270308HO2	Screw For Heat Sink & Rear	2

5. BLOCK DIAGRAM

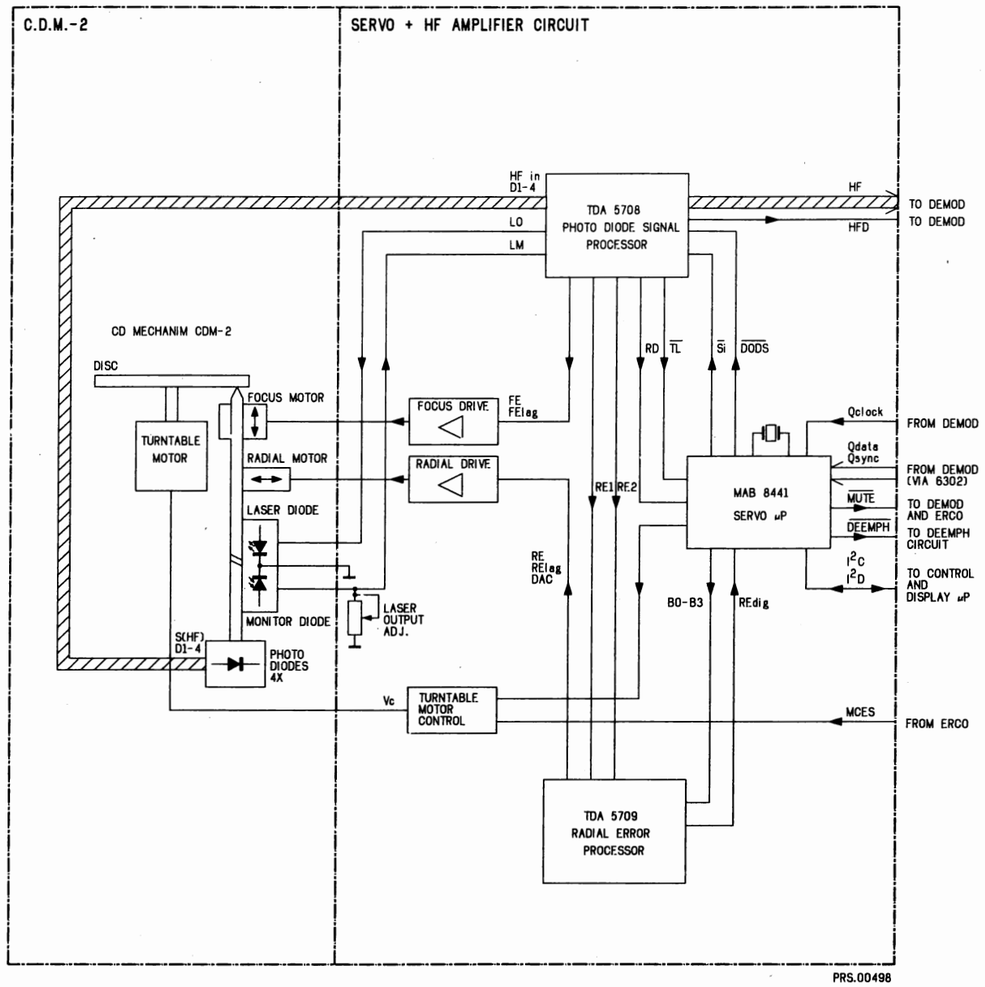

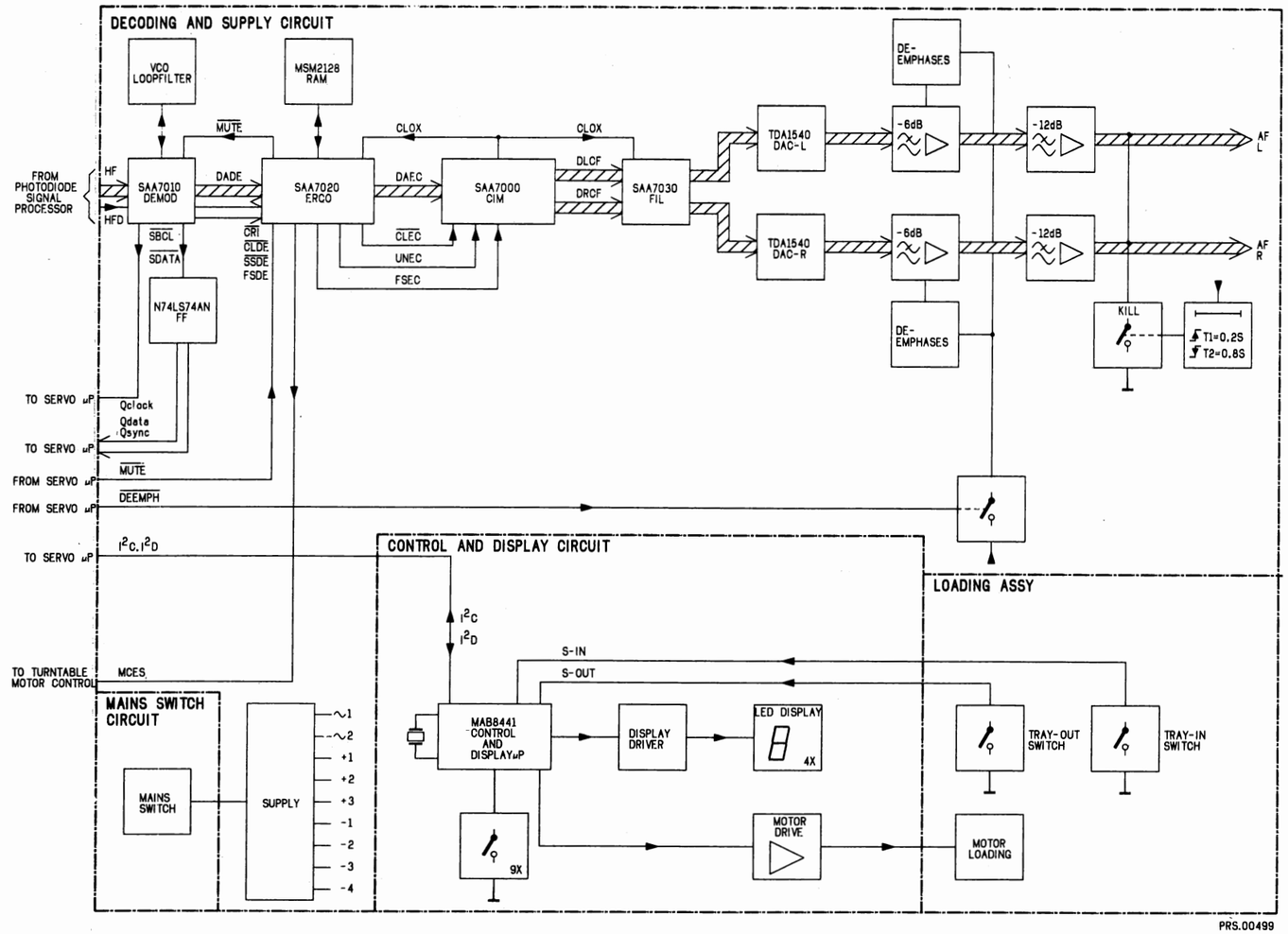

- ABBREVIATIONS

B0-B3	–	Control bits for radial circuit
DAC	–	Current output for track jumping (Digital to Analogue Converted)
$\overline{\text{DEEMPH}}$	–	Deemphasis
$\overline{\text{DODS}}$	–	Drop out detector supression
D1 ÷ 4	–	Photodiode currents
FE	–	Focus error signal
FE lag	–	Focus error signal for LAG network
HF	–	HF output for DEMOD
HFD	–	HF detector output for DEMOD
HF-in	–	HF current input
I²C	–	Clock signal servo-control µP
I²D	–	Date signal servo-control µP
LM	–	Laser monitor diode input
LO	–	Laser amplifier current output
MCES	–	Motor control from ERCO to servo circuit
$\overline{\text{MUTE}}$	–	Mute signal
Q CLOCK	–	Subcode clock input for servo µP
Q DATA	–	Subcode data input for servo µP
Q SYNC	–	Subcode synchronization input for servo µP
RE	–	Radial error signal (amplified RE_2-RE_1 currents)
RE1	–	Radial error signal 1 (summation of amplified currents D_3 and D_4
RE2	–	Radial error signal 2 (summation of amplified currents D_1 and D_2
RE dig	–	Radial error digital
RE lag	–	Radial error signal for LAG network
RD	–	Ready signal, starting up procedure finished
$\overline{\text{Si}}$	–	On/off control for laser supply and focus circuit
$\overline{\text{TL}}$	–	Track loss signal
Vc	–	Control voltage for turntable motor
$\overline{\text{CLDE}}$	–	Clock from DEMOD to ERCO
$\overline{\text{CLEC}}$	–	Clock from ERCO to CIM
CLOX	–	Clock from CIM (System Clock)
$\overline{\text{CRI}}$	–	Counter reset inhibit
DADE	–	Data from DEMOD to ERCO
DAEC	–	Data from ERCO to CIM
$\overline{\text{DEEMPH}}$	–	Deemphasis
DLCF	–	Data left from CIM to FIL
DRCF	–	Data right from CIM to FIL
FSDE	–	Frame sync. from DEMOD to ERCO
FSEC	–	Frame sync. from ERCO to CIM
HF	–	HF input for DEMOD
HFD	–	HF detector for DEMOD
I²C	–	Clock signal servo-control µP
I²D	–	Data signal servo-control µP
MCES	–	Motor control from ERCO to servo
$\overline{\text{MUTE}}$	–	Mute signal
Q CLOCK	–	Subcode clock signal
Q DATA	–	Subcode data dignal
Q SYNC	–	Subcode synchronization signal
SBCL	–	Subcode bit clock
S DATA	–	Subcode data
S-IN	–	Tray in
S-OUT	–	Tray out
UNEC	–	Unreliable data flag from ERCO to CIM

6. SCHEMATIC DIAGRAM, PARTS LOCATION ON P.C. BOARD AND PARTS LIST

6-1. Power Supply Circuit

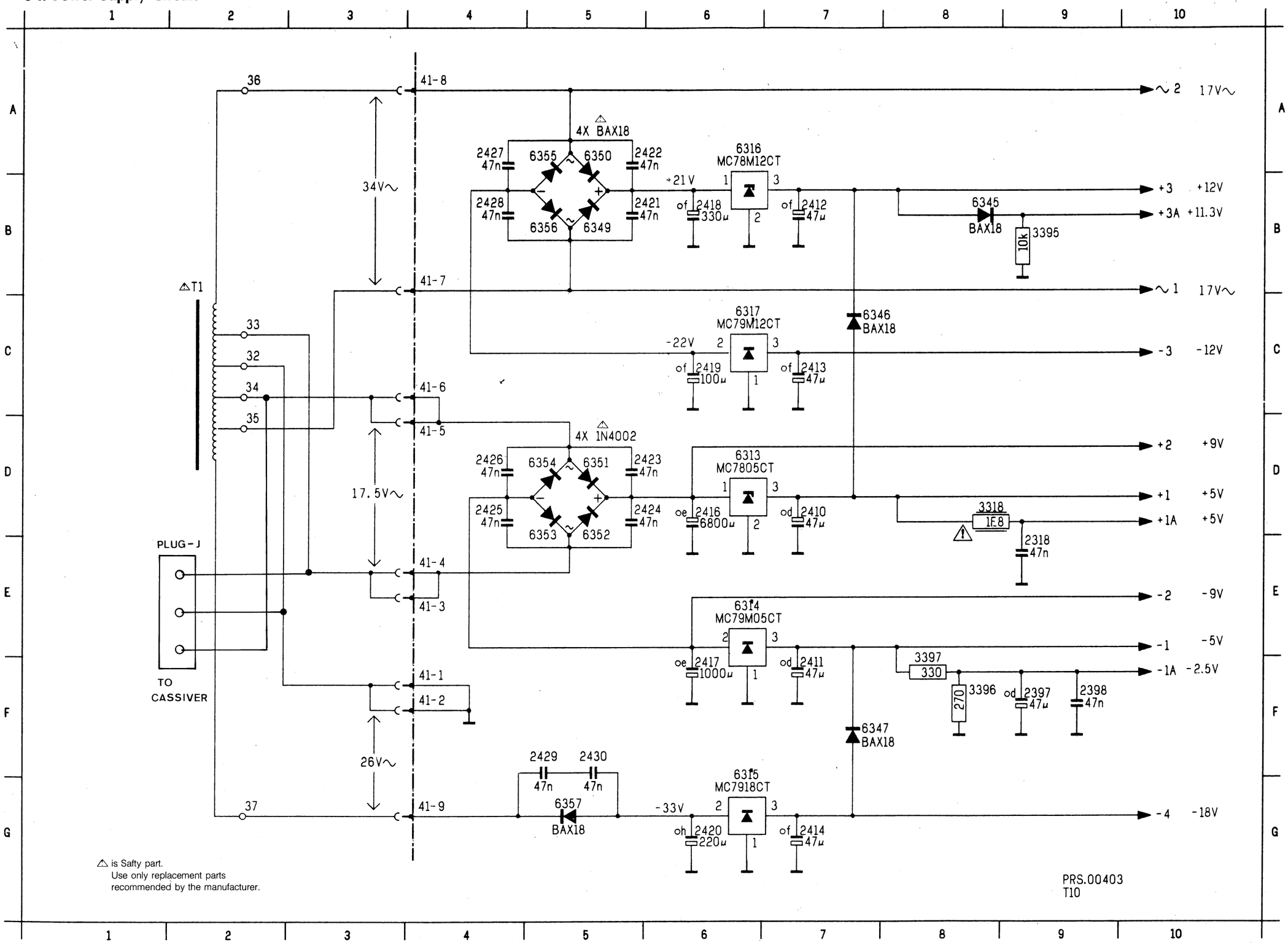

Circuit Ref. No.	Position
2318	E 9
2397	F 9
2398	F 9
2410	D 7
2411	F 7
2412	B 7
2413	C 7
2414	G 7
2416	D 6
2417	F 6
2418	B 6
2419	C 6
2420	G 6
2421	B 6
2422	A 6
2423	D 6
2424	D 6
2425	D 4
2426	D 4
2427	A 4
2428	B 4
2429	F 5
2430	F 5
3318	D 8
3395	B 9
3396	F 8
3397	F 8
6345	B 8
6346	C 7
6347	F 7
6349	B 5
6350	A 5
6351	D 5
6352	D 5
6353	D 5
6354	D 5
6355	A 5
6356	B 5
6357	G 5
T1	B 2

6-2. Power Supply & Decoder P.C. Board and Parts List

- Pattern Side < Chip parts >

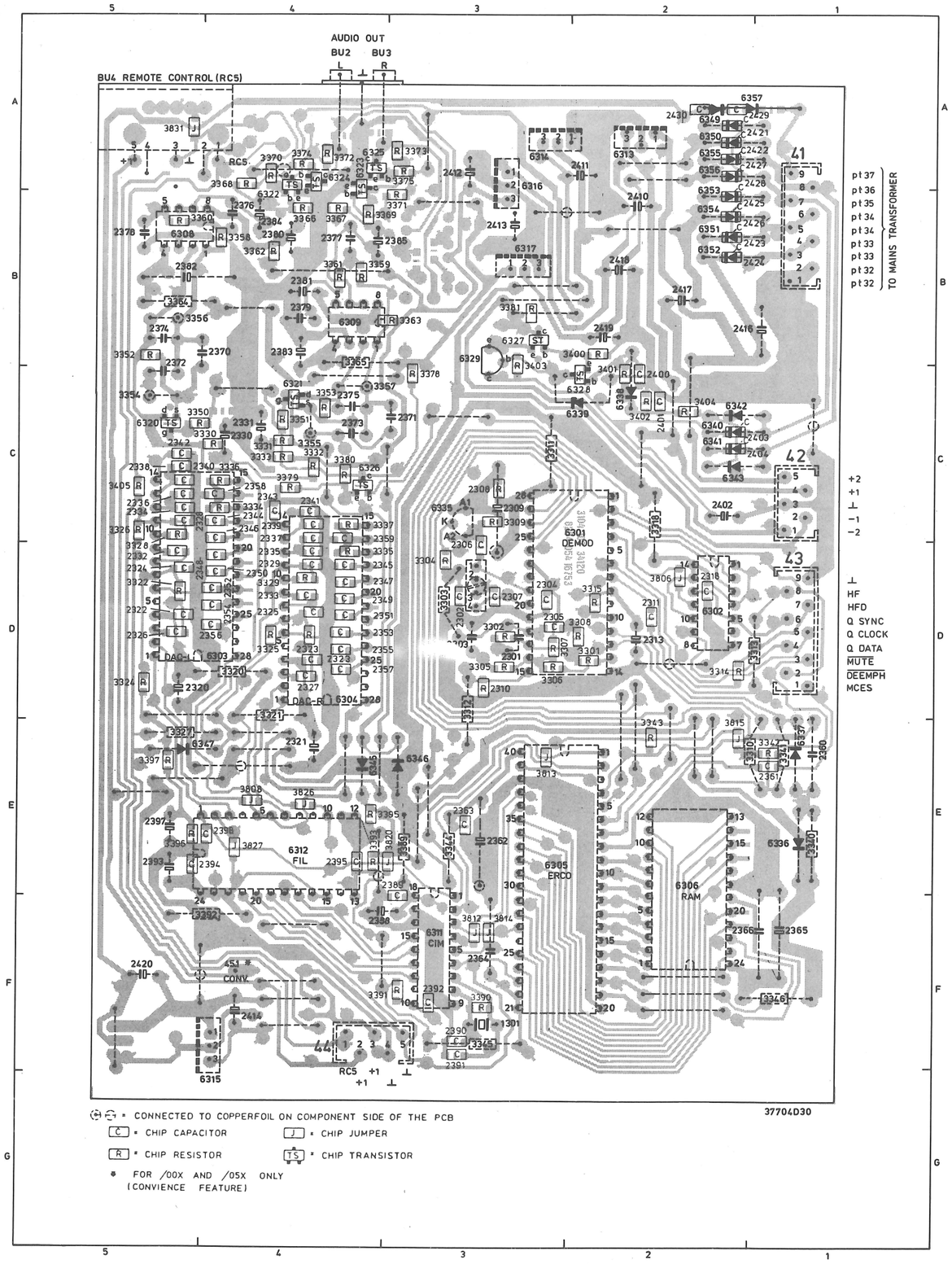

• Component Side

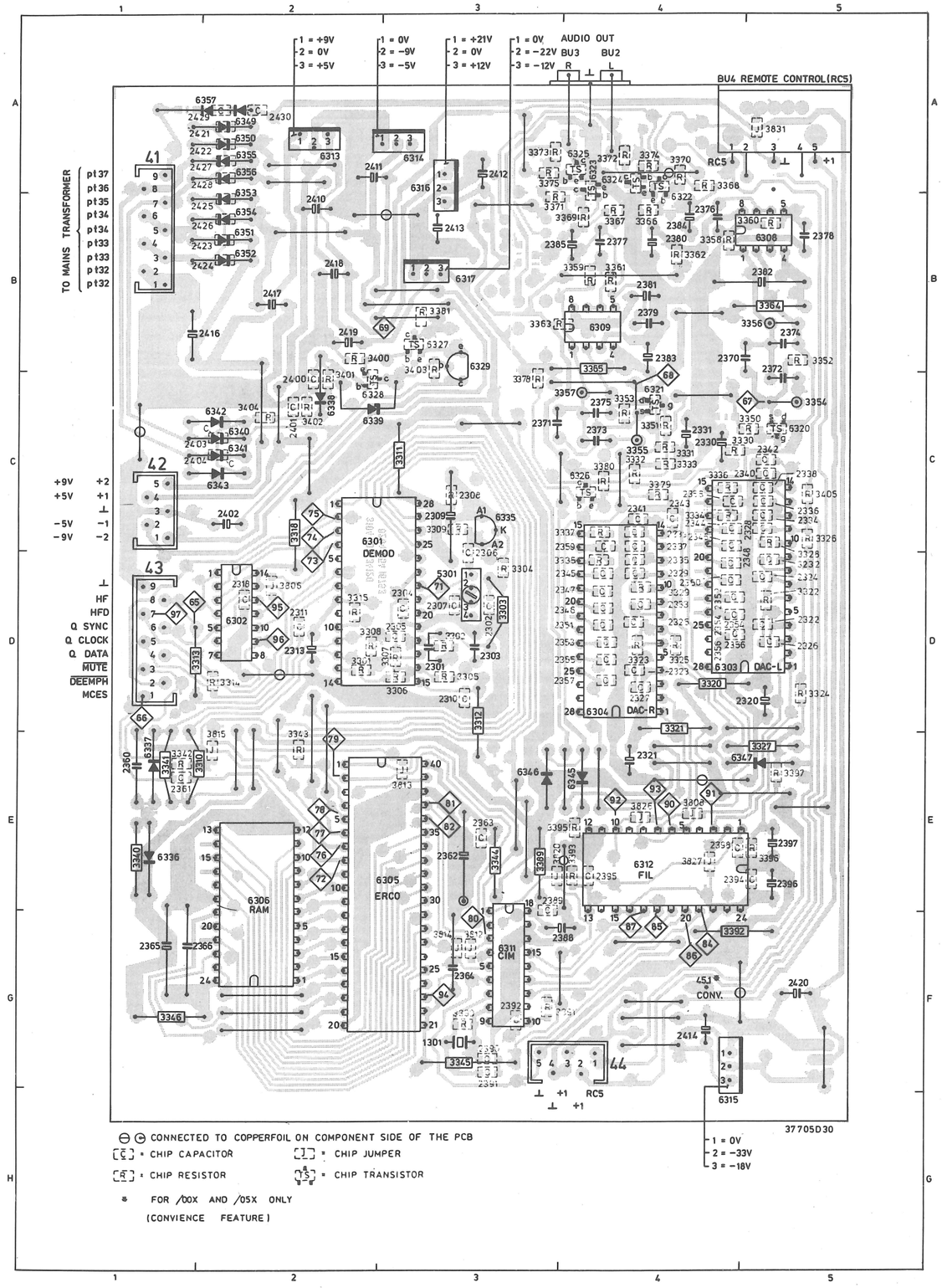

• Parts List < Power Supply & Decoder >

		Stock No. (J)	Stock No. (T)
SAA7000	CIM	58380900	4822 209 10375
SAA7010	DEMOD	58377800	4822 209 10857
SAA7020	ERCO	58381000	4822 209 10377
SAA7030	FIL	58381100	4822 209 10378
TDA1540	DAC	58377900	4822 209 81453
MSM2128-20RS	RAM	58378000	4822 209 10379
LM833N		58378100	4822 209 83163
SN74LS74AN		58378200	4822 209 80782
MC7805CT		58378300	4822 209 80891
MC78M12CT		58378400	5322 209 86176
MC79M05CT		58378500	4822 209 83164
MC7912CT		58378600	4822 209 82065
MC7918CT		58378700	4822 209 83165
©			
BC548B		58378800	4822 130 40937
BC818/25 ©		58378900	4822 130 42696
BC818/25R ©		58379000	4822 130 42697
BC848B ©		58379100	5322 130 41982
BC858BR ©		58379200	4822 130 42134
BC858CR ©		58379300	4822 130 42634
BSR56 ©		58379400	4822 130 42633
IN4002		58379500	5322 130 30684
IN414B		58379600	4822 130 30621
BAX18		58379700	4822 130 34121
HZ4B2/C3V9		58379800	4822 130 32843
BB212		58379900	4822 130 31129

		Stock No. (J)	Stock No. (T)
1301	X-tal 4,2336 MHz		4822 242 70663
5301		58380000	4822 156 21155
2301,2303	22nF-2%		4822 121 50609
2370,2371	5,1nF-2%		4822 121 50976
2372,2373	1,5nF-2%		4822 121 50432
2374 ÷ 2377	2,2nF-2%		4822 121 50841
2378,2379	1,2nF-2%		5322 121 54135
3311,3318,3320 / 3321,3346,3389	1,8 Ω-NFR25		4822 111 30489
3344,3392	1 Ω-NFR25		4822 111 30483
BU2,3	CINCH-socket	58380100	4822 267 30631
BU4	DIN-socket	58380200	4822 267 40284
Miscellaneous			
Spring clip		58380300	4822 492 63076
Transformer fuse		58380400	4822 252 20007
Mains transf.		58380500	4822 146 21047
Mains transf.	(only for 07/17)	58380600	4822 146 21067

* For Non active chipcomponents, see separate list on page 65.

Circuit Ref.No.	Position																			
1301	F3	2305	D3	2310	D3	2321	E4	2326	D5	2331	C4	2336	C5	2341	C4	2346	C4	2352	D4
2301	D3	2306	D3	2311	D2	2322	D5	2327	D4	2332	D5	2337	C4	2342	C5	2347	D4	2353	D4
2302	D3	2307	D3	2313	D2	2323	D4	2328	C5	2333	D4	2338	C5	2343	C4	2348	D4	2354	D4
2303	D3	2308	C3	2318	D2	2324	D5	2329	D4	2334	C5	2339	C4	2344	C4	2350	D4	2355	D4
2304	D3	2309	C3	2320	D5	2325	D4	2330	C4	2335	D4	2340	C5	2345	D4	2351	D4	2356	D4
2357	D4	2362	E3	2370	B5	2375	C4	2380	B4	2385	B4	2392	F3	2400	C2	2410	B2	2416	B1
2358	C4	2363	E3	2371	C3	2376	B4	2381	B4	2388	F3	2394	E5	2401	C2	2411	A2	2417	B2
2359	C4	2364	F3	2372	C5	2377	B4	2382	B5	2389	E4	2395	E4	2402	C2	2412	A3	2418	B2
2360	E1	2365	F1	2373	C4	2378	B5	2383	B4	2390	F3	2396	E5	2403	C2	2413	B3	2419	B2
2361	E1	2366	F1	2374	B5	2379	B4	2384	B4	2391	F3	2397	E5	2404	C2	2414	F4	2420	F5
2421	A2	2426	B2	3232	D5	3305	D3	3310	E1	3315	D2	3323	D4	3329	D4	3334	C4	3341	E1
2422	A2	2427	A2	3301	D2	3306	D3	3311	C3	3318	C2	3324	D5	3330	C4	3335	D4	3342	E1
2423	B2	2428	A2	3302	D3	3307	D3	3312	D3	3320	D4	3325	D4	3331	C4	3336	C4	3343	E2
2424	B2	2429	A1	3303	D3	3308	D2	3313	D1	3321	D4	3326	C5	3332	C4	3337	C4	3344	E3
2425	B2	2430	A2	3304	D3	3309	C3	3314	D2	3322	D5	3328	C5	3333	C4	3340	E1	3345	F3
3346	F1	3354	C5	3360	B5	3365	B4	3370	A4	3375	A3	3380	C4	3391	F3	3400	B2	3405	C5
3350	C5	3355	C4	3361	B4	3366	B4	3371	B3	3376	B3	3381	B3	3392	F4	3401	C2	3806	D2
3351	C4	3356	B5	3362	B4	3367	B4	3372	A4	3377	B3	3385	B4	3393	E4	3402	C2	3808	E4
3352	B5	3357	C4	3363	B3	3368	A4	3373	A3	3378	C3	3389	E3	3395	E4	3403	B3	3812	F3
3353	C4	3359	B4	3364	B5	3369	B4	3374	A4	3379	C4	3390	F3	3396	E5	3404	C2	3813	E3
3814	F3	3831	A5	6304	D4	6310	B3	6316	A3	6323	A4	6328	C2	6338	C2	6343	C2	6351	B2
3815	E2	5301	D3	6305	E3	6311	F3	6317	B3	6324	A4	6329	B3	6339	C2	6345	E4	6352	B2
3820	E3	6301	C2	6306	E2	6312	E4	6320	C5	6325	A4	6335	C3	6340	C2	6346	E3	6353	B2
3826	E4	6302	D2	6308	B5	6313	A2	6321	C4	6326	C4	6336	E1	6341	C2	6349	A2	6354	B2
3827	E4	6303	D4	6309	B4	6314	A3	6322	A4	6327	B3	6337	E1	6342	C2	6350	A2	6355	A2
6356	A2																		
6357	A2																		

6-3. Decoder Circuit

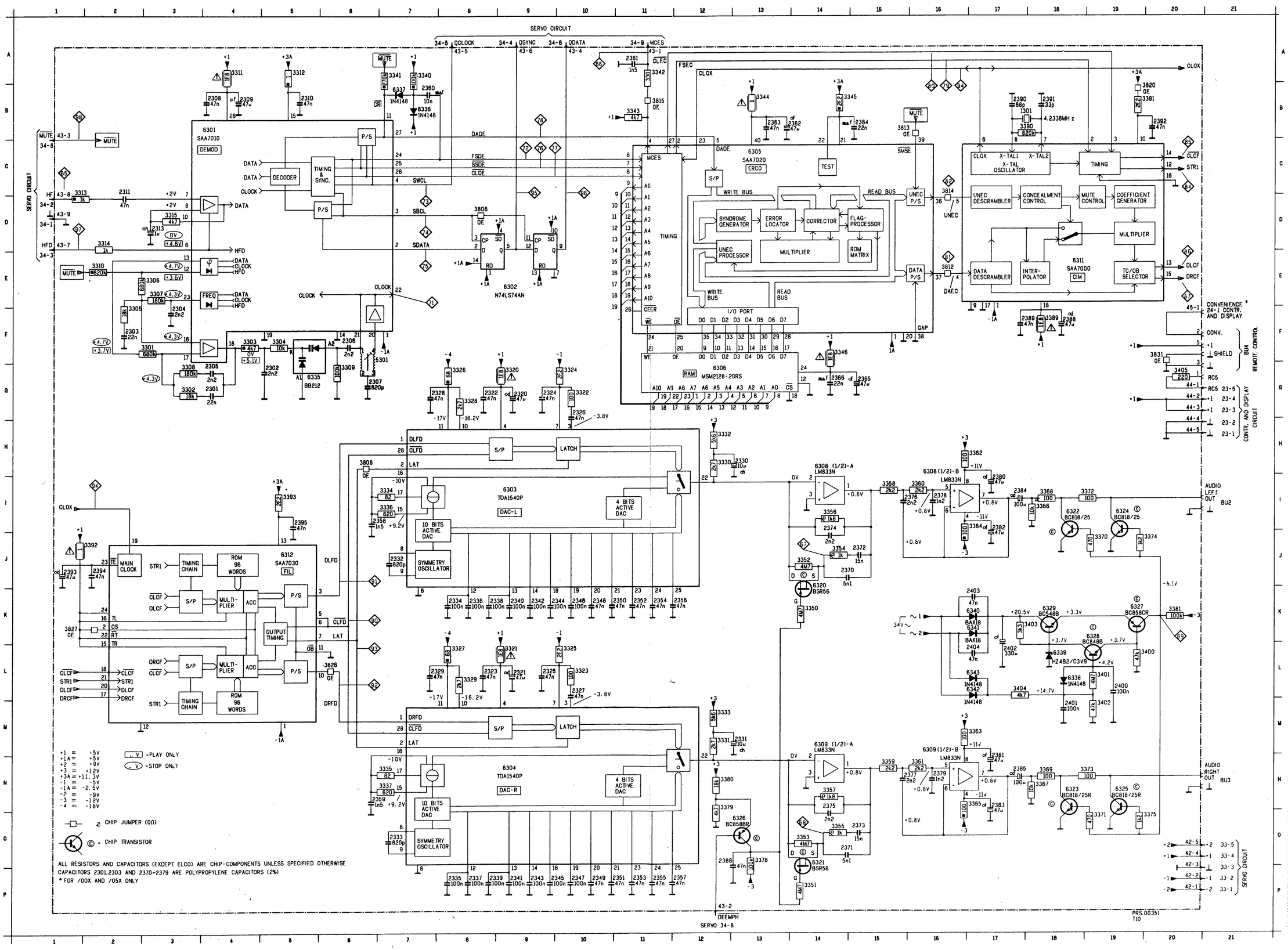

Circuit Ref.No.	Position	Circuit Ref.No.	Position
6311	E18	3378	D13
1301	B18	3379	N12
2301	G 4	3380	N12
2302	G 5	3381	K20
2303	F 2	3389	F18
2304	F 3	3390	B17
2305	G 4	3391	B20
2306	F 6	3392	J 2
2307	G 6	3393	I 5
2308	B 4	3400	L20
2309	B 4	3401	L19
2310	B 5	3402	M19
2311	C 2	3403	K18
2313	D 3	3404	L17
2320	G 9	3405	O20
2321	L 9	3806	D 8
2322	G 8	3808	H 6
2323	L 8	3812	E16
2324	G 9	3813	B15
2325	L 9	3814	C16
2326	G10	3815	B11
2327	L10	3820	B20
2328	G 8	3826	L 6
2329	L 8	3827	K 1
2330	H13	3831	F20
2331	H13	5301	F 7
2332	J 7	6301	B 4
2333	D 7	6302	E 9
2334	K 8	6303	I 9
2335	P 8	6304	N 9
2336	K 8	6305	C13
2337	P 8	6306	G12
2338	K 9	6308	H16
2339	P 9	6308	H14
2340	K 9	6309	M16
2341	P 9	6309	M14
2342	K 9	6312	J 5
2343	P 9	6320	J14
2344	K10	6321	O14
2345	P10	6322	I18
2346	K10	6323	N18
2347	P10	6324	I19
2350	K11	6325	N19
2351	P11	6326	D13
2352	K11	6327	K19
2353	P11	6328	K19
2354	K11	6329	K18
2355	P11	6335	G 5
2356	K12	6336	B 7
2357	P12	6337	B 7
2358	I 7	6338	L18
2359	N 7	6339	L18
2360	B 7	6340	K17
2361	B11	6341	K17
2362	B14	6342	L17
2363	B13	6343	L17
2364	B15		
2365	O15		
2366	O14		
2370	J14		
2371	O14		
2372	J15		
2373	O15		
2374	I14		
2375	N14		
2376	I16		
2377	N16		
2378	I16		
2379	N16		
2380	I17		
2381	N17		
2382	I17		
2383	N17		
2384	I17		
2385	N17		
2386	O12		
2388	F18		
2389	F18		
2390	B17		
2391	B18		
2392	B20		
2393	J 1		
2394	J 2		
2395	I 5		
2400	L19		
2401	M18		
2402	L17		
2403	K17		
2404	L17		
3301	F 3		
3302	G 3		
3303	F 4		
3304	F 5		
3305	F 2		
3306	E 3		
3307	E 3		
3308	G 3		
3309	G 6		
3310	E 2		
3311	A 4		
3312	A 5		
3313	C 1		
3314	D 2		
3315	D 3		
3320	G 9		
3321	L 9		
3322	G10		
3323	L10		
3324	G10		
3325	L10		
3326	G 8		
3327	L 8		
3328	G 8		
3329	L 8		
3330	H12		
3331	M12		
3332	H12		
3333	M12		
3334	I 7		
3335	N 7		
3336	I 7		
3337	N 7		
3340	A 7		
3341	A 7		
3342	A11		
3343	B11		
3344	B13		
3345	B15		
3346	F14		
3350	K14		
3351	P14		
3352	J14		
3353	O14		
3354	J14		
3355	O14		
3356	I14		
3357	N14		
3358	I15		
3359	N15		
3360	I16		
3361	N16		
3362	H17		
3363	M17		
3364	I17		
3365	N17		
3366	I18		
3367	N18		
3368	I18		
3369	N18		
3370	J19		
3371	O19		
3372	I19		
3373	N19		
3374	J20		
3375	O20		

+1 = +5V
+1A = +5V
+2 = +9V
+3 = +12V
+3A = +11.3V
-1 = -5V
-1A = -2.5V
-2 = -9V
-3 = -12V
-4 = -18V

V = PLAY ONLY
V = STOP ONLY

CHIP JUMPER (0Ω)

Ⓒ = CHIP TRANSISTOR

ALL RESISTORS AND CAPACITORS (EXCEPT ELCO) ARE CHIP-COMPONENTS UNLESS SPECIFIED OTHERWISE.
CAPACITORS 2301,2303 AND 2370~2379 ARE POLYPROPYLENE CAPACITORS (2%)
* FOR /00X AND /05X ONLY

6-4. Control & Display Circuit

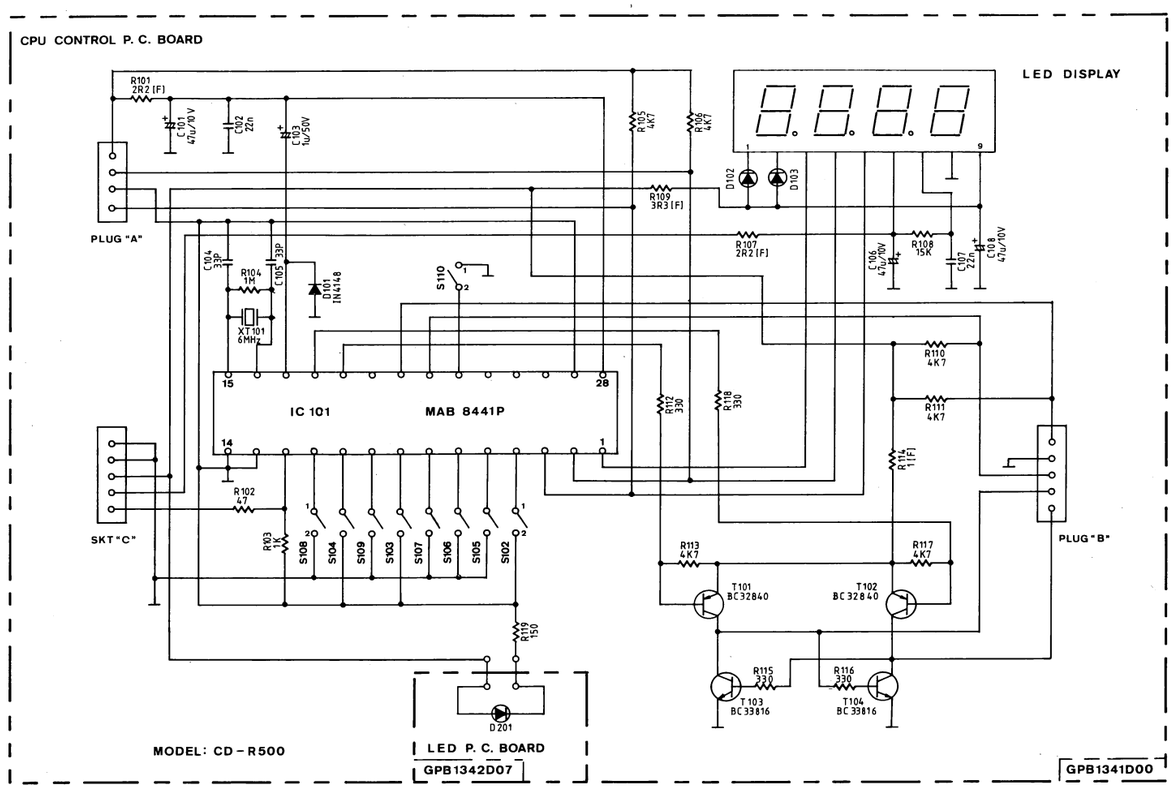

• MAB 8441P (Control & Display Micro processor IC)

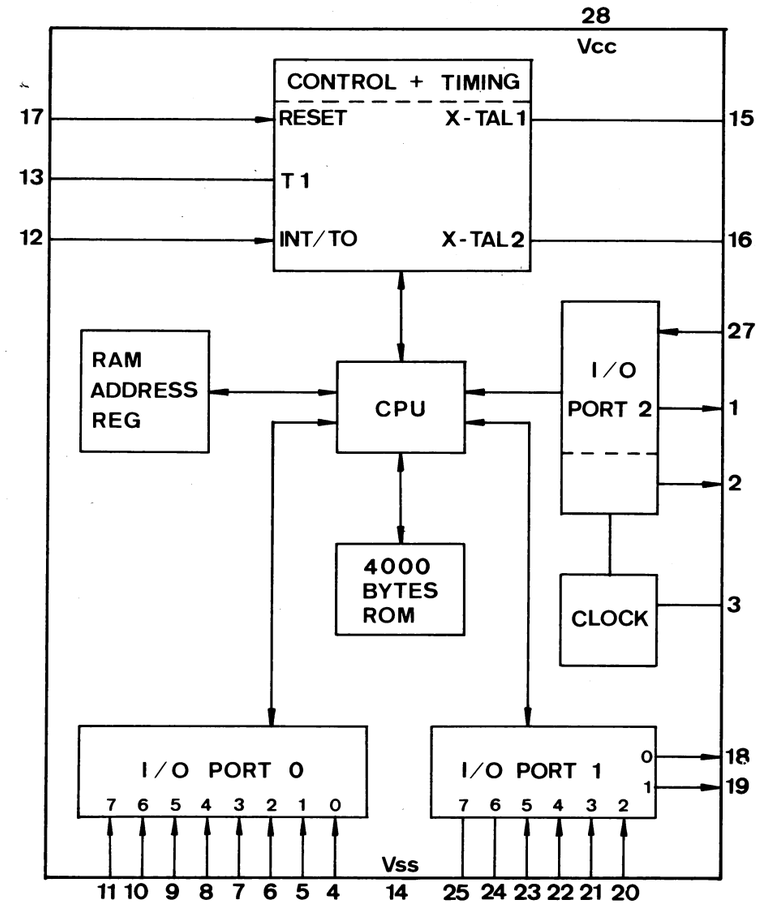

6-5. Control & Display P.C. Board and Parts List

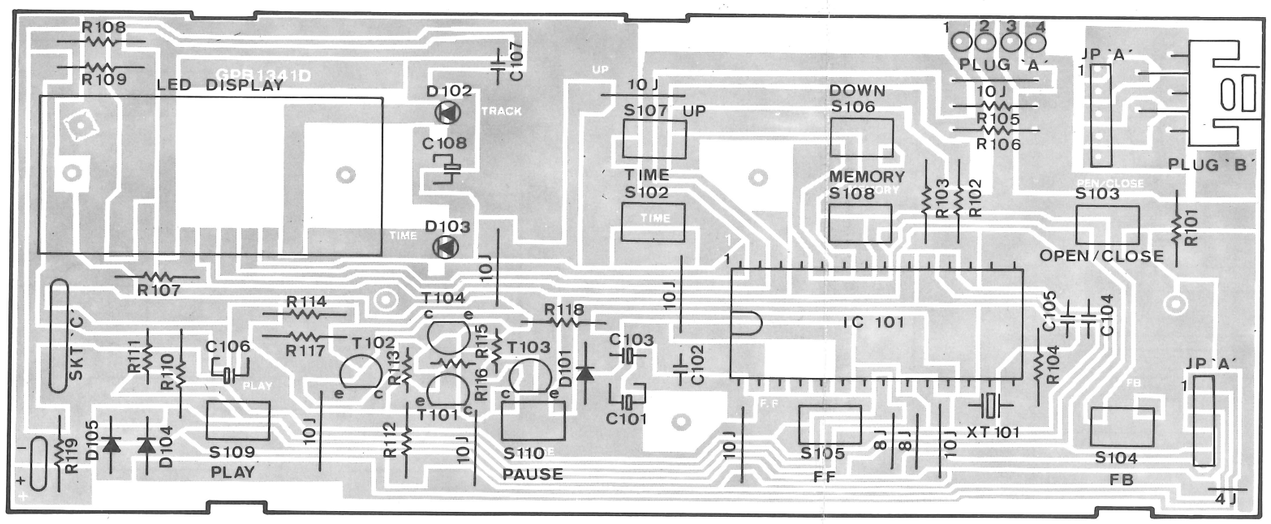

• **Parts List**

Parts No.	Stock No.(J)	Stock No. (T)	Descroption
IC			
IC101	58341300	EIC0084413	MAB 8441P
	58341400	GDC1501219	Display Red
D201	58341500	GLD0311514	L.E.D. Green 3ϕ
D102	58332400	GLD0142253	L.E.D. Red
D103	58332600	GLD0162451	L.E.D. Yellow
Transistor			
T101, 102	58342200	ESC3284040	C 32840
T103, 104	58342300	ESC3381640	C 33816
Diode			
D101	58335500	EDS4148124	IN 4148 In
XT101	58341600	ECF60M0027	CRYSTAL 6.0MHz
Ceramic			
C104, 105	00383200	ECC331PF04	33pF N150 ±10%
C102, 107	58380700	ECC224LF09	223 SR

• **Parts List**

Parts No.	Stock No. (J)	Stock No. (T)	Description
Elect			
C103	48463900	ECE106F601	1μF / 50V
C101, 106, 108	48458800	ECE477B709	47μF / 10V
	Resistor		
R114	58342700	ERJ100F4F9	1 ohm 1/4W (Fuse)
R101, 107	58342500	ERJ220F4F2	2.2 1/4W (Fuse)
R109	58342600	ERJ330F4F2	3.3 1/4W (Fuse)
R102	00235600	ERJ4710415	47 1/4W
R119	00227600	ERJ1520419	150 1/4W
R112, 118	00233200	ERJ3320417	330 1/4W
R103	00224900	ERJ1030415	1K 1/4W
R105, 106, 110, 117	00235800	ERJ4730417	4.7K 1/4W
R108	00227800	ERJ1540411	15K 1/4W
R104	00225200	ERJ1060418	1M 1/4W
R115, 116	46476300	ERJ3320613	330 1/6W
R111, 113	46479000	ERJ4730613	4.7K 1/6W

7. WIRING DIAGRAM

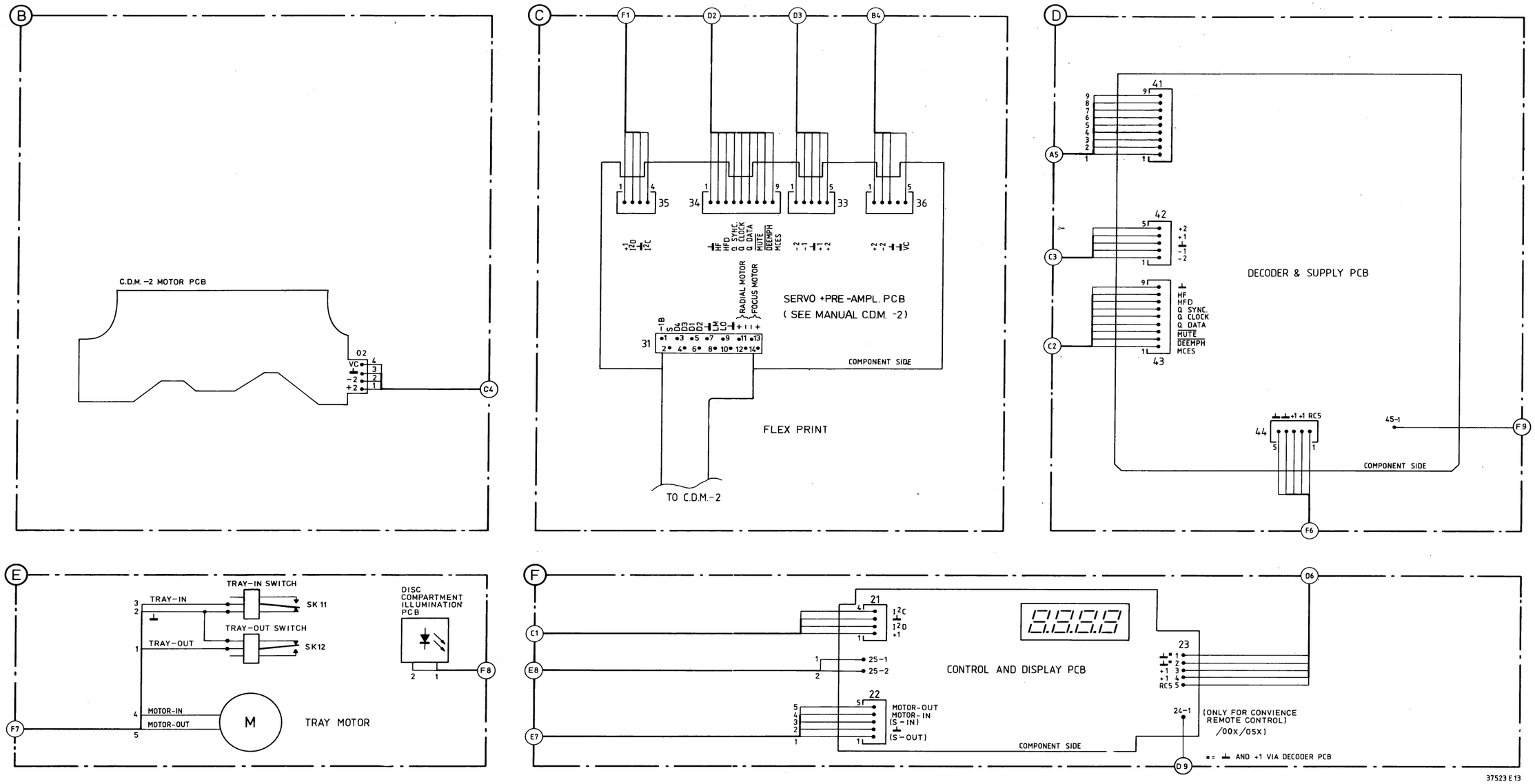

8. CIRCUIT REFERENCE SYMBOLS

SYMBOL	DESCRIPTION
	Capacitor. general
	Electrolytic capacior (+ and – may be omitted)
	Bipolar electrolytic capacitor (+ may be omitted)
	Resistor. general
-θ	N.T.C. resistor
+θ	P.T.C. resistor
	Voltage divider with preset adjustment
	Chip jumper
	Pin contact
	Bus contact
	Coil. self-induction
	Transformer with electrically poor conducting core and adjustable pre-mkagnetization
	Diode
	Zener diode
	Stabistor
	Double variable capacity diode (in one envelope)
	Photo conductive diode
	L.E.D.

SYMBOL	DESCRIPTION
	Transistor (N.P.N.)
	Transistor (P.N.P)
	Direct current (DC)
	Alternating current (AC)
	Earth (functional)
	Frame of chassis connection
	Direction in which AC voltages are passed on (optional present)
	Interrupted line
	Not-connected crossing lines
	Connected lines
	Cable tree with lead-outs
	Changer. general (arrow is optional)
G VCO	Voltage Controlled Oscillator
	Band-pass filter
	Phase changing network
...ns	Delay element
	Amplifier. general

SYMBOL	DESCRIPTION
	Operational amplifier
	Differential amplifier
	Splitter
	Operational amplifier with open output
=1	Exclusive OR gate
	True/complement amplifier with high input
F.F.	Flip Flop
&	AND gate
≥1	OR gate
1	Inverter with high input

0.2W (CR 16)	≤220kΩ	5%
	>270kΩ	10%
0.33W (CR 25)	≤1 MΩ	5%
	>1 MΩ	10%
0.33W (SFR25)		5%
0.25W (VR 25)	≤10MΩ	5%
	>10MΩ	10%
0.5W (CR 37)	≤1 MΩ	5%
	>1 MΩ	10%
0.67W (CR 52)		5%
1.15W (CR 68)		5%

Ceramic plate	
Polyester flat foil	
Polyester mepolesco	
Mylar (Polyester flat foil small sized)	
Micropoco	
Tubular ceramic (body colour pink or yellow/green)	
Miniature single elco	
Subminiature tantalum	

*		
a	= 2.5	V
b	= 4	V
c	= 6.3	V
d	= 10	V
e	= 16	V
f	= 25	V
g	= 40	V
h	= 63	V
i	= 100	V
j	= 125	V
l	= 125	V
m	= 150	V
n	= 160	V
q	= 200	V
r	= 250	V
s	= 300	V
t	= 350	V
u	= 400	V
v	= 500	V
w	= 630	V
x	= 1000	V
A	= 1.6	V
B	= 6	V
C	= 12	V
D	= 15	V
E	= 20	V
F	= 35	V
G	= 50	V
H	= 75	V
I	= 80	V

9. STANDARD CHIP PARTS LIST

© Chips 50 V NP0 S1206

1 pF	5%	4822 122 32279
1,5 pF	5%	4822 122 31792
1,8 pF	5%	4822 122 32087
3,3 pF	5%	4822 122 32079
3,9 pF	5%	4822 122 32081
4,7 pF	5%	4822 122 32082
8,2 pF	5%	4822 122 32083
10 pF	5%	4822 122 31971
12 pF	5%	4822 122 32139
18 pF	5%	4822 122 31769
22 pF	10%	4822 122 31837
27 pF	5%	4822 122 31966
33 pF	5%	4822 122 31756
39 pF	5%	4822 122 31972
47 pF	5%	4822 122 31772
56 pF	5%	4822 122 31774
68 pF	5%	4822 122 32267
82 pF	10%	4822 122 31839
100 pF	5%	4822 122 31765
120 pF	5%	4822 122 31766
150 pF	5%	4822 122 31767
180 pF	2%	4822 122 31794
220 pF	5%	4822 122 31965
270 pF	5%	4822 122 32142
330 pF	10%	4822 122 31642
390 pF	5%	4822 122 31771
470 pF	5%	4822 122 31727
560 pF	5%	4822 122 31773
680 pF	5%	4822 122 31775
820 pF	5%	4822 122 31974
1 nF	10%	5322 122 31647
1,2 nF	5%	4822 122 31807
1,5 nF	10%	4822 122 31781
2,2 nF	10%	4822 122 31644
2,7 nF	10%	4822 122 31783
3,3 nF	10%	4822 122 31969
4,7 nF	10%	4822 122 31784
5,6 nF	10%	4822 122 31916
6,8 nF	10%	4822 122 31976
10 nF	10%	4822 122 31728
12 nF	10%	5322 122 31648
15 nF	10%	4822 122 31782
18 nF	10%	4822 122 31759
22 nF	10%	4822 122 31797
33 nF	10%	4822 122 31981
100 nF	20%	4822 122 31947

© Chips 0,125 W S1206

0 E	jumper	4822 111 90163
1 E	10%	4822 111 90184
1,1 E	10%	4822 111 90377
1,2 E	10%	4822 111 90378
1,3 E	10%	4822 111 90379
1,5 E	10%	4822 111 90381
1,6 E	10%	4822 111 90382
1,8 E	10%	4822 111 90383
2 E	10%	4822 111 90384
2,4 E	10%	4822 111 90507
2,2 E	10%	4822 111 90385
2,7 E	10%	4822 111 90386
3 E	10%	4822 111 90387
3,3 E	10%	4822 111 90447
3,6 E	10%	4822 111 90389
3,9 E	10%	4822 111 90391
4,3 E	10%	4822 111 90392
4,7 E	5%	5322 111 90376
5,1 E	10%	4822 111 90393
5,6 E	10%	4822 111 90394
6,2 E	10%	4822 111 90395
6,8 E	5%	4822 111 90254
7,5 E	10%	4822 111 90396

© Chips 0,125 W S1206

8,2 E	10%	4822 111 90397
9,1 E	10%	4822 111 90398
10 E	5%	5322 111 90095
11 E	5%	4822 111 90338
12 E	5%	4822 111 90551
13 E	5%	4822 111 90343
15 E	5%	4822 111 90344
16 E	5%	4822 111 90347
18 E	5%	5322 111 90139
20 E	5%	4822 111 90352
22 E	5%	4822 111 90186
27 E	5%	4822 116 60186
30 E	5%	4822 111 90356
33 E	5%	4822 111 90357
36 E	5%	4822 111 90359
39 E	5%	4822 111 90361
43 E	5%	5322 116 90125
47 E	5%	4822 111 90217
51 E	5%	4822 111 90365
56 E	5%	4822 116 60187
62 E	5%	4822 111 90367
68 E	5%	4822 111 90203
75 E	5%	4822 111 90371
82 E	5%	4822 116 60158
91 E	5%	4822 111 90375
100 E	5%	5322 111 90091
110 E	5%	4822 111 90335
120 E	5%	4822 111 90339
130 E	5%	4822 111 60164
150 E	5%	5322 116 90098
160 E	5%	4822 111 90345
180 E	5%	5322 111 90242
200 E	5%	4822 111 90348
220 E	5%	4822 111 90178
240 E	5%	4822 111 90459
270 E	5%	4822 111 90154
300 E	5%	4822 111 90156
330 E	5%	5322 111 90106
360 E	1%	4822 111 90288
390 E	5%	5322 111 90138
430 E	2%	4822 111 90362
470 E	5%	5322 111 90109
510 E	5%	4822 111 90245
560 E	5%	5322 111 90113
620 E	5%	4822 111 90366
680 E	5%	4822 111 90162
750 E	5%	4822 111 90438
820 E	5%	4822 111 90171
910 E	5%	4822 111 90372
1 k	5%	5322 111 90092
1,1 k	5%	4822 111 90294
1,2 k	5%	5322 111 90096
1,3 k	5%	4822 111 90244
1,5 k	5%	4822 111 90151
1,6 k	5%	5322 111 90265
1,8 k	5%	5322 111 90101
2 k	5%	4822 111 90165
2,2 k	2%	4822 111 90248
2,4 k	5%	4822 111 90289
2,7 k	2%	4822 111 90569
3 k	5%	4822 111 90198
3,3 k	5%	4822 111 90157
3,6 k	5%	5322 111 90107
3,9 k	2%	4822 111 90571
4,3 k	5%	4822 111 90167
4,7 k	5%	5322 111 90111
5,1 k	5%	5322 111 90268
5,6 k	2%	4822 111 90572
6,2 k	2%	4822 111 90545
6,8 k	2%	4822 111 90544
7,5 k	5%	4822 111 90276
8,2 k	5%	5322 111 90118

© Chips 0,125 W S1206

9,1 k	5%	4822 111 90373
10 k	2%	4822 111 90249
11 k	5%	4822 111 90337
12 k	2%	4822 111 90253
13 k	2%	4822 111 90509
15 k	5%	4822 111 90196
16 k	5%	4822 111 90346
18 k	5%	4822 111 90238
20 k	5%	4822 111 90349
22 k	2%	4822 111 90251
24 k	2%	4822 111 90512
27 k	2%	4822 111 90542
30 k	2%	4822 111 90216
33 k	5%	5322 111 90267
36 k	2%	4822 111 90514
39 k	5%	5322 111 90108
43 k	5%	4822 111 90363
47 k	2%	4822 111 90543
51 k	5%	5322 111 90274
56 k	2%	4822 111 90573
62 k	5%	5322 111 90275
68 k	5%	4822 111 90202
75 k	2%	4822 111 90574
82 k	2%	4822 111 90575
91 k	5%	5322 111 90277
100 k	2%	4822 111 90214
110 k	5%	5322 111 90269
120 k	2%	4822 111 90568
130 k	2%	4822 111 90511
150 k	5%	5322 111 90099
160 k	2%	5322 111 90264
180 k	2%	4822 111 90565
200 k	5%	4822 111 90351
220 k	5%	4822 111 90197
240 k	2%	4822 111 90215
270 k	5%	4822 111 90302
300 k	5%	5322 111 90266
330 k	2%	4822 111 90513
360 k	2%	4822 111 90515
390 k	5%	4822 111 90182
430 k	5%	4822 111 90168
470 k	5%	4822 111 90161
510 k	5%	4822 111 90364
560 k	5%	4822 111 90169
620 k	2%	4822 111 90213
680 k	2%	4822 111 90368
750 k	5%	4822 111 90369
820 k	5%	4822 111 90205
910 k	5%	4822 111 90374
1 M	2%	4822 111 90252
1,1 M	5%	4822 111 90408
1,2 M	10%	4822 111 90409
1,3 M	10%	4822 111 90411
1,5 M	10%	4822 111 90412
1,6 M	10%	4822 111 90413
2 M	10%	4822 111 90415
2,2 M	10%	4822 111 90185
2,4 M	10%	4822 111 90416
2,7 M	10%	4822 111 90417
3 M	10%	4822 111 90418
3,3 M	10%	4822 111 90191
3,6 M	10%	4822 111 90419
3,9 M	10%	4822 111 90421
4,3 M	10%	4822 111 90422
4,7 M	10%	4822 111 90423
5,1 M	10%	4822 111 90424
5,6 M	10%	4822 111 90508
6,2 M	10%	4822 111 90426
6,8 M	10%	4822 111 90328
7,5 M	10%	4822 111 90427
8,2 M	10%	4822 111 90329
9,1 M	10%	4822 111 90428

10. OTHER PARTS

10-1. Front View

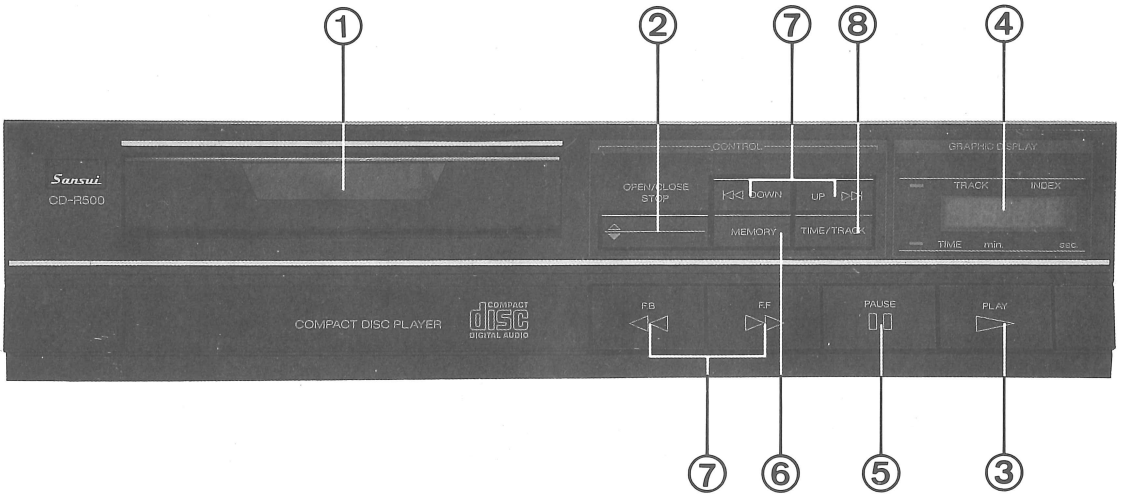

- **Parts List**

No.	Stock No. (J)	Stock No. (T)	Description
1	58339300	MDC1309D03	CD Door
2	58338800	MDK1365D00	Knob For "Open/Close"
3	58339200	MDK1366D30	Knob For "Play"
4	58341400	GDC1501219	Display
5	58339100	MDK1366D29	Knob For "Pause"
6	58338700	MDK1364D36	Knob For "Memory"
7	58339000	MDK1366D18	Music Search Knob
8	58338600	MDK1364D25	Knob For "Time/Track"

10-2. Top View

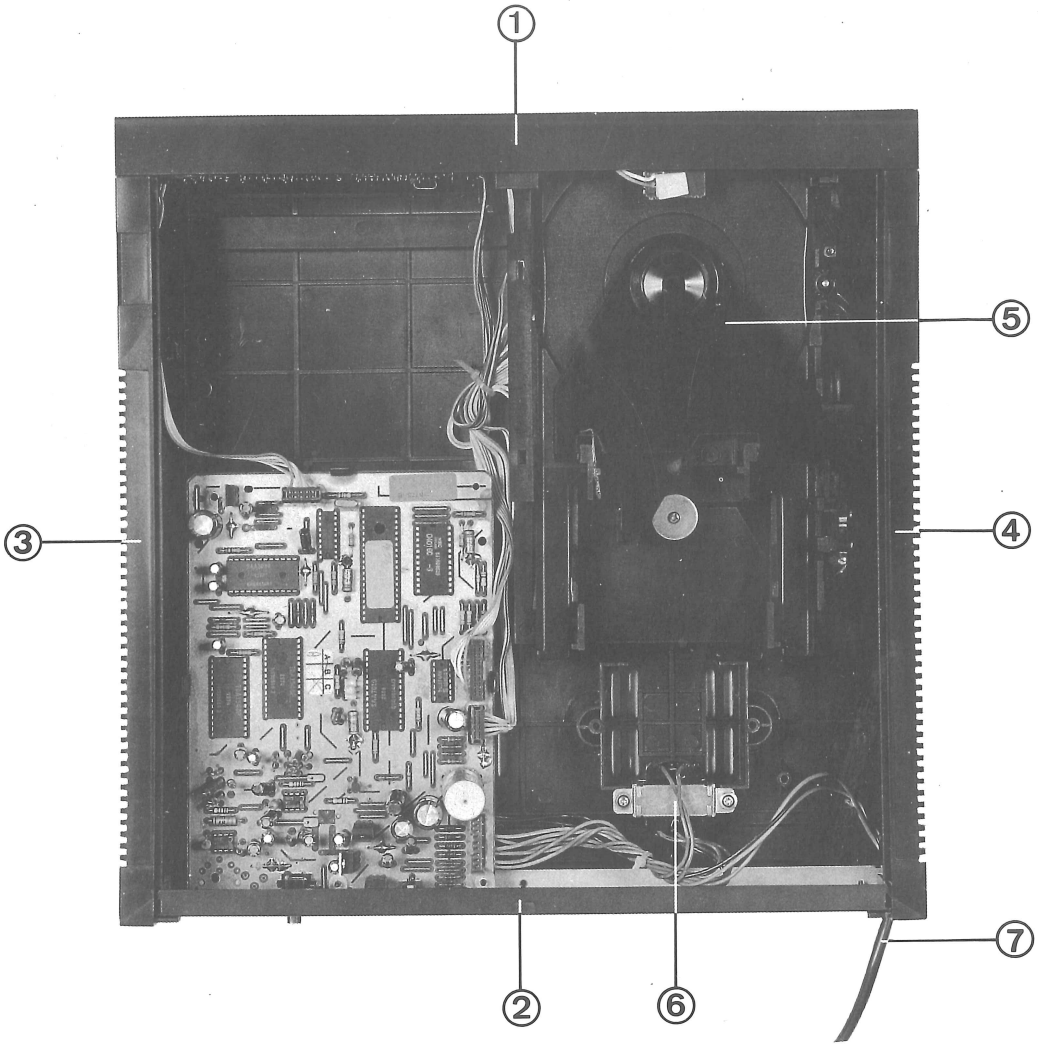

• **Parts List**

No.	Stock No. (J)	Stock No. (T)	Description
1	58337900	MDC1305D05	Front Panel
2	58346800	MSB1583D08	Rear Cover
3	58338100	MDC1306D02	Side Panel (L)
4	58338200	MDC1307D09	Side Panel (R)
5	58341100	GPA0001D09	CD P.C.B & Deck
6	58340900	GTP0177D05	Power Transformer
7	58340500	MEJ1262F04	3 Pin AC Connector

11. PACKING LIST

No.	Stock No. (J)	Stock No. (T)	Description
1	58337700	MPW1080D01	Poly Bag For Set
2	58337600	MPP1258D01	Styrofoam Packing For Set
3	58337500	MPC1479D02	Carton Case

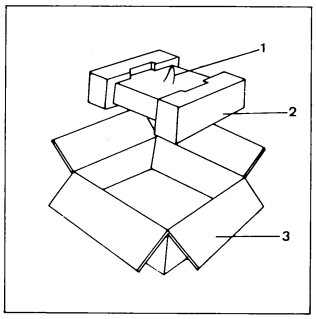

12. ACCESSORY LIST

No.	Stock No. (J)	Stock No. (T)	Description
1	58342800	MEJ1085D16	RCA Jack Wire
2	58337800	MDL2329D02	Instruction Book

HI-FI SPEAKER SYSTEM

SANSUI S-U1

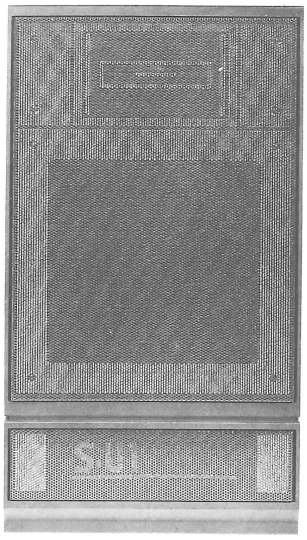

Specifications

Speakers	2-way 2-speaker-type
Woofer	165 mm (6-1/2") Cone-type
Tweeter	50 mm (2") Cone-type
Maximum input power	25 Watts
Maximum Peak input Power	35 Watts
Impedance	4 ohms
Sensitivity	86 dB/W (at 1 m)
Frequency range	50 to 20,000 Hz (in normal listening room)
Crossover frequencies	2,000 Hz, 5,000 Hz
Dimensions	196 mm (7-3/4") W 364 mm (14-1/3") H 168 mm (6-2/3") D
Weight	3.45 kg (7.59 lbs) net 7.4 kg (16.3 lbs) twin packed

1. FRONT VIEW

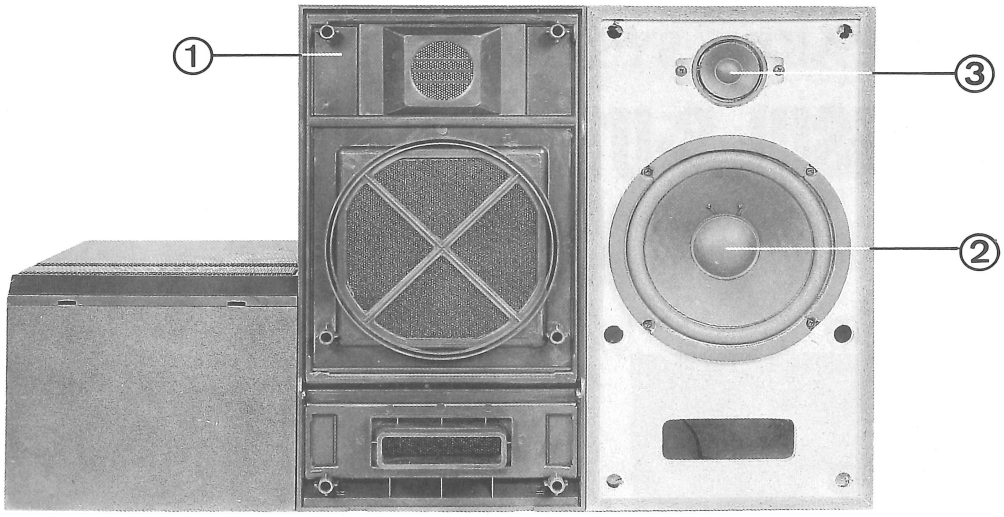

• **Parts List**

No.	Stock No. (J)	Stock No. (T)	Description
1	58343200	MDC1312D05	Front Cover
2	58343600	GSP4612D37	Speaker 4 ohm 35W 6-1/2''
3	58343700	GSP4712D30	Speaker 4 ohm 35W 2''

2. PACKING LIST

• **Parts List**

No.	Stock No. (J)	Stock No. (T)	Description
1	58343100	MPW1087D00	Poly Bag For Speaker
2	58343000	MPP1267D05	Styrofoam Packing
3	58342900	MPC1459D00	Carton Case

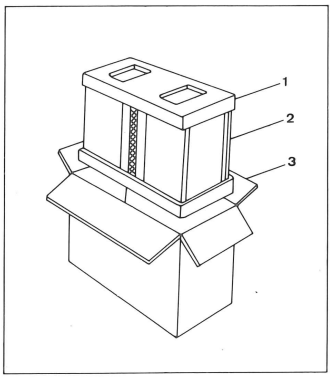

Sansui

SANSUI ELECTRIC CO., LTD.: 14-1, Izumi 2-chome, Suginami-ku, Tokyo Japan
PHONE: (03) 324-8891/TELEX: 232-2076 (International Division)
SANSUI ELECTRONICS CORPORATION: 1250 Valley Brook Ave. Lyndhurst, N.J. 07071 U.S.A.
17150 South Margay Ave. Carson, California 90746 U.S.A.
3036 Koapaka Street. Honolulu, Hawaii 96819 U.S.A.
SANSUI ELECTRONICS (U.K.) LTD.: Unit 10A, Lyon Industrial Estate, Rockware Avenue, Geenford, Middx UB6, OAA, England
SANSUI ELECTRONICS G.M.B.H.: Pau Ehrich Strasse 8, 6074 Rödermark 2, West Germany

(1986.11) < Stock No. 58380800 > Printed in Taiwan