Deze download wordt u gratis aangeboden door Pick-upnaalden.nl

Web	:	www.pickupnaalden.com
Email	:	info@pick-upnaalden.nl
Facebook	:	www.facebook.com/pickupnaalden
Twitter	:	twitter.com/Pickupnaalden
Google+	:	https://plus.google.com/+FCaris_pickupnaalden

SERVICE MANUAL

AUTOMATIC DIRECT DRIVE TURNTABLE

SANSUI DA-P550A
(Silver & Black Model)

CLASSIQUE DA-P555A

CAUTION

1. Parts identified by the ⚠ symbol on the schematic diagram and the parts list are critical for safety. Use only replacement parts that have critical characteristics recommended by the manufacturer.
2. Make leakage-current or resistance measurements to determine that exposed parts are acceptably insulated from the supply circuit before returning the appliance to the customer.

Sansui

SANSUI ELECTRIC CO., LTD.

• SPECIFICATIONS

Wow/flutter	0.04% (WRMS)
Signal-to-noise ratio	Better than 72 dB (DIN-B) Better than 60 dB (IEC-B)
Tonearm	Statically-balanced type
Output voltage	2.5 mV (1,000 Hz, 50 mm/sec)
Correct load impedance	47 kohms
Dimensions	430 mm (16-29/32") W 96 mm (3-25/32") H 367 mm (14-15/32") D
Weight	3.7 kg (8.1 lbs) net 4.6 kg (10.1 lbs) packed
Power consumption	2.5 W

* Design and specifications subject to changes without notice for improvements.

CAUTION

1. Some printed circuit boards are not supplied as the assembled. To separate these in this service manual, the stock No's are not indicated at the ends of the board names. However, the individual parts on the circuit boards are provided by orders.

2. Since some of capacitors and resistors are omitted from parts lists in this service manual, refer to the Common Parts List for capacitors & resistors, which was issued on February 1983.

3. Abbreviations in this service manual are as follows.

• Abbreviations List

C.R.	: Carbon Resistor	E.B.L.	: Low Leak Bi-Polar Electrolytic Capacitor
S.R.	: Solid Resistor	Ta.C.	: Tantalum Capacitor
Ce.R	: Cement Resistor	F.C.	: Film Capacitor
M.R.	: Metal Film Resistor	M.P.	: Metalized Paper Capacitor
F.R.	: Fusing Resistor	P.C.	: Polystyrene Capacitor
N.I.R.	: Non-Inflammable Resistor	G.C.	: Gimmic Capacitor
A.R.	: Array Resistor	A.C.	: Array Capacitor
C.C.	: Ceramic Capacitor	V.R.	: Variable Resistor
C.T.	: Ceramic Capacitor, Temperature Compensation	S.V.R.	: Semi Variable Resistor
E.C.	: Electrolytic Capacitor	SW.	: Switch
E.L.	: Low Leak Electrolytic Capacitor	Chip R.	: Chip Resistor
E.B.	: Bi-Polar Electrolytic Capacitor	Chip C.	: Chip Capacitor

1. BLOCK DIAGRAM

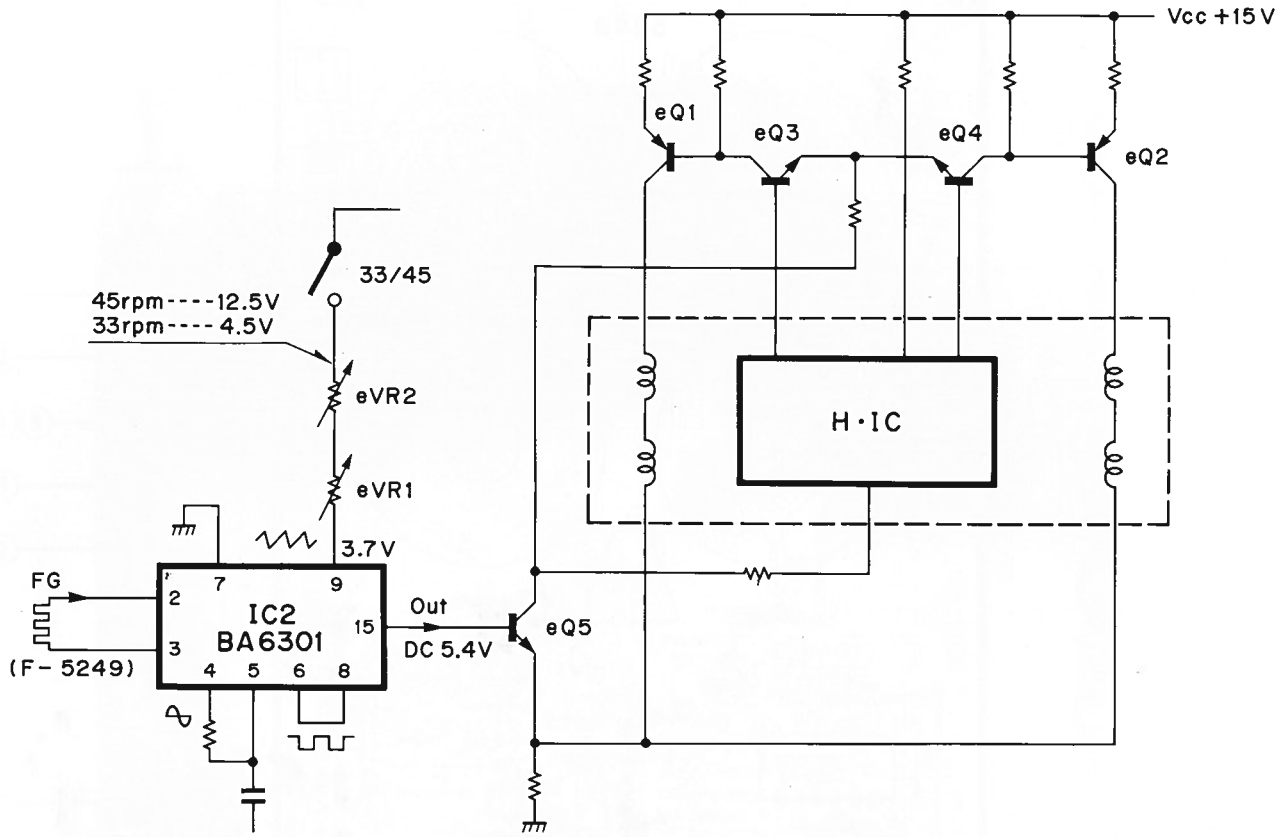

Pattern drawing of motor section
(F-5249 Motor Control Circuit Board)

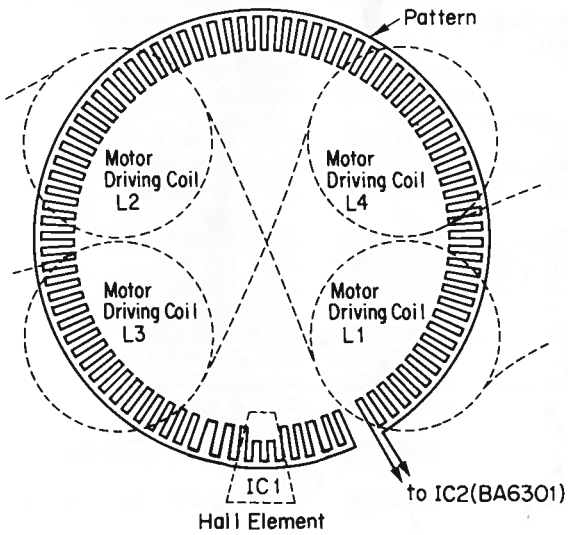

(BA-6301)

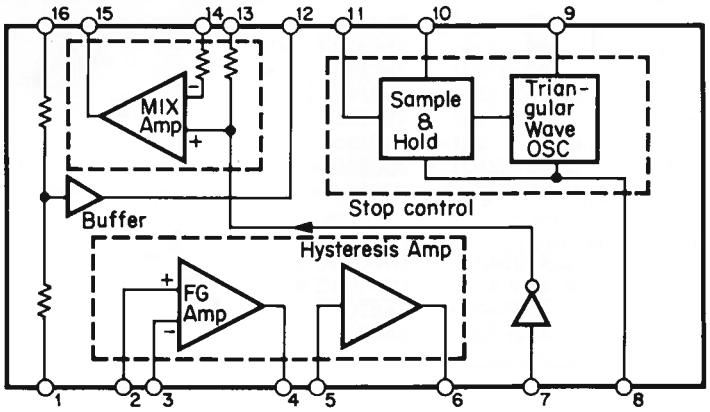

2. PARTS LOCATION & PARTS LIST

2-1. F-5249 Motor Control Board

Component Side

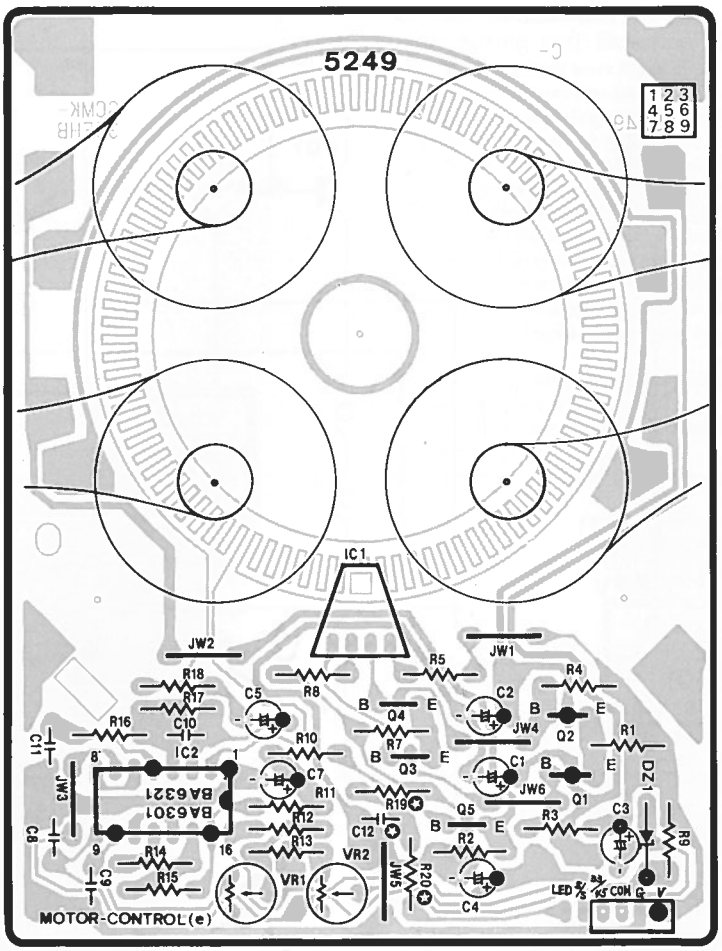

Parts List

Parts No.	Stock No.	Description
• Transistor		
eQ1	46614001	2SA1283
eQ2	46614001	2SA1283
eQ3	46367101	2SC2603
	or 46367301	2SC2458
eQ4	46367101	2SC2603
	or 46367301	2SC2458
eQ5	46367101	2SC2603
	or 46367301	2SC2458
• IC		
eICl	46354301	HW-301C-Q
	or 46354302	HW-301C-R
eIC2	46354400	BA6301
	or 48264600	BA6321

Parts No.	Stock No.	Description
• Zener Diode		
eDZ1	46113900	05Z12-Y
	or 46113800	05Z12-X
	or 46114000	05Z12-Z
⚠ eR1	46241000	6.8 Ω 1W N.I.R.
⚠ eR2	46248000	8.2 Ω 1W N.I.R.
⚠ eR9	46242800	220 Ω 1W N.I.R.
eC1	46928700	22 μF 16V E.L.
eC2	46928700	22 μF 16V E.L.
eC3	46928700	22 μF 16V E.L.
eC4	46928700	22 μF 16V E.L.
eC5	46929200	4.7 μF 25V E.L.
eC7	46930800	0.22 μF 50V E.L.
eC8	46284100	0.1 μF 50V F.C.
eC9	46282900	0.01 μF 50V F.C.
eVR1	46634800	68 KΩ S.V.R., Speed Adj. 33 rpm
eVR2	46635300	470 KΩ S.V.R., Speed Adj. 45 rpm

2-2. F-5247 Speed SW. Board

Component Side

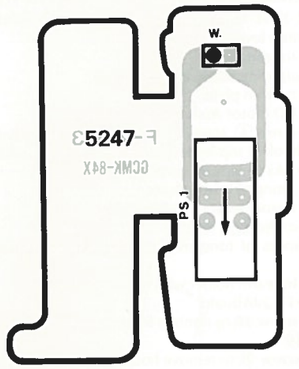

Parts List

Parts No.	Stock No.	Description
gSW1	46164900	Push SW., SPEED

2-3. F-5246 Wiring Board

Component Side

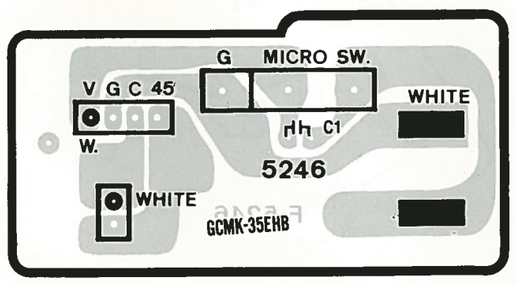

3. OTHER PARTS

Parts List

Parts No.	Stock No.	Description
1	13012300	45 r.p.m. Adaptor
2	13140800	Turntable Sheet
3	47870400	Turntable Platter
4	47753300	Knob, SPEED, CUT (Silver Model)
	47753400	Knob, SPEED, CUT (Black Model)
5	46164900	Push SW., SPEED
6	13017200	Main Gear Ass'y
6-1	————	Lower Trip
6-2	————	Upper Trip
6-3	51822900	CS-type Washer, d=3
7	00489400	E-type Washer, d=5
8	47743400	Reject Arm
9	13234300	DC Power Supply Cord
10	13234400	Output Cord
11	50624800	Adjusting Hole Cover
12	13734000	Main Weight
13	47739100	Tonearm holder
14	47739200	Bushing, tonearm holder
15	47738800	Lifter Stage
16	13035600	Spring, D = 5.3 x 10 mm(C)
17	47805100	Spring, lifter D = 10 x 24
18	47738900	Elevation Chip
19	13038100	Pan Head Screw (A), lifter M3 x 20
20	13138300	Lifter Lever Ass'y
21	13013500	Knob, lifter lever ass'y
* 22	47739300	Arm Rest Ass'y
23	13138500	Hook, arm rest
24	13167700	Binding Tapping Screw, hook M2 x 5
25	13733900	Tonearm Ass'y
26	48345500	Stylus, SN-P212
	13142400	Dust Cover Ass'y
	13142600	Auto Hinge

* The Arm Rest Ass'y㉒ includes lifter stage⑮, spring⑯⑰, elevation chip⑱, screw (A)⑲, hook㉓ and screw㉔.

3-1. Front View

3-2. Top View

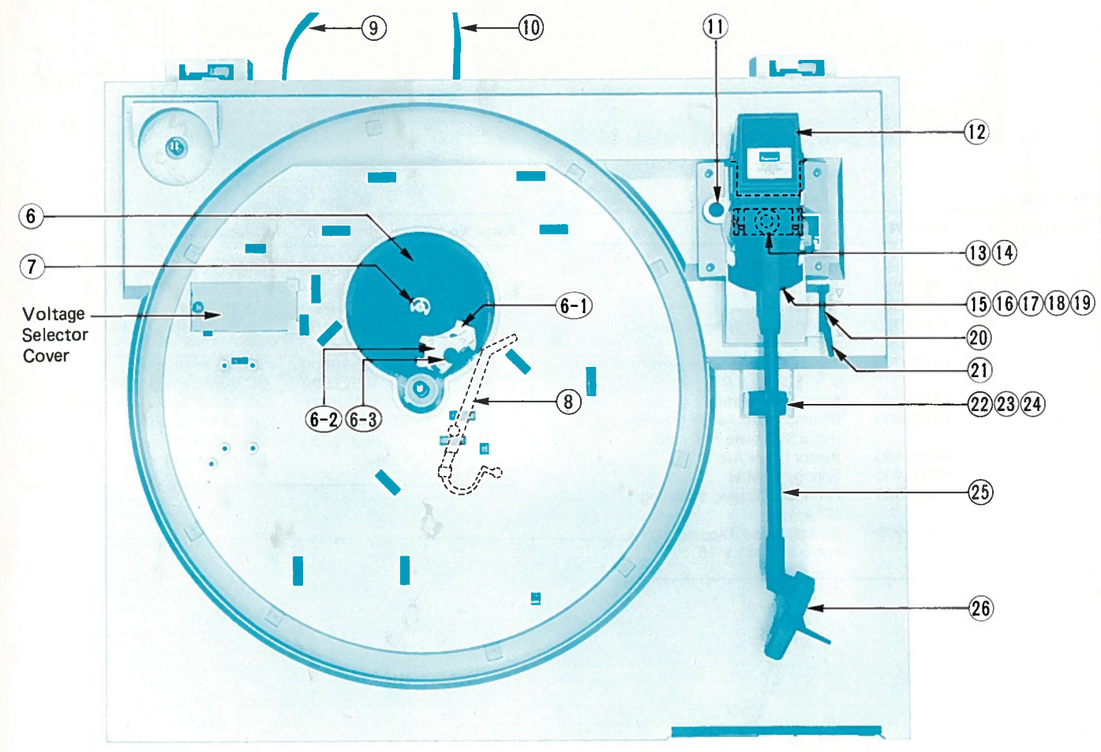

3-3. Bottom View

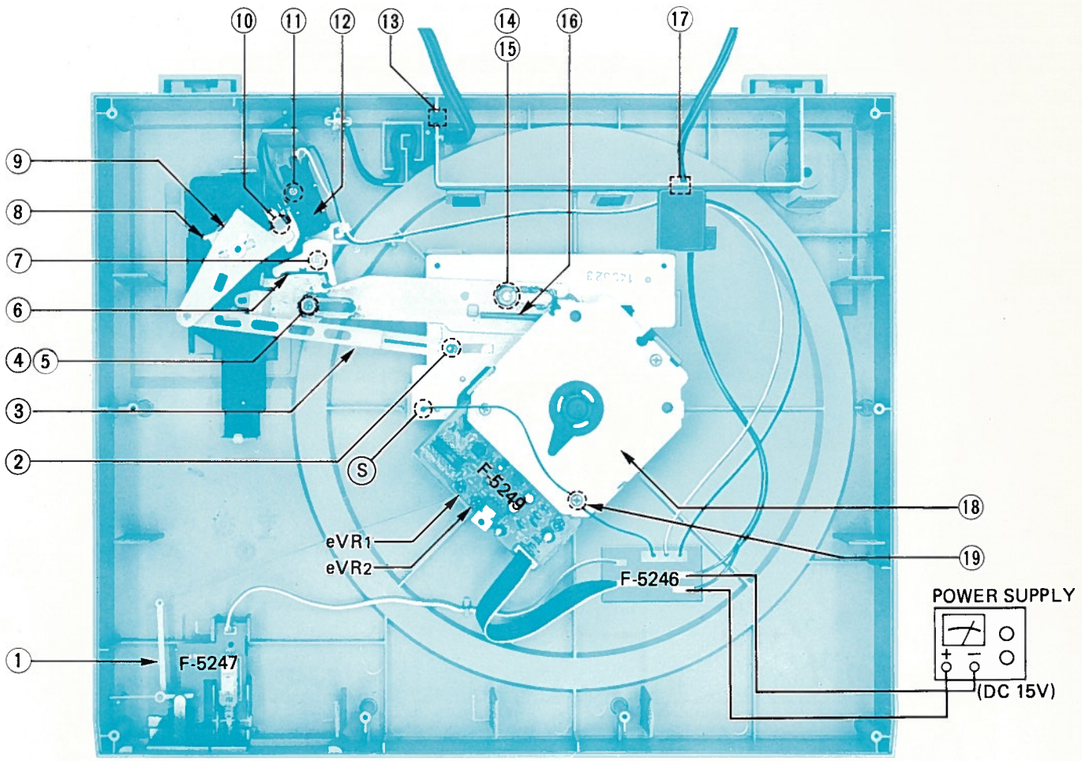

Parts List

Parts No.	Stock No.	Description
1	47753100	Lever, CUT
2	13051900	Steel Ball, 5ϕ
3	47804800	Trip Lever
4	47846900	Pan Head Tapping Screw (C), slide arm
5	13180900	Thrust Washer, slide arm d = 5 x 10 x 0.5
6	47738700	Micro SW. Plate
7	46563800	Binding Head Tapping Screw, micro SW. plate M3 x 20
8	47804400	Restor Lever Ass'y
9	69034400	Spring, stopper
10	00437300	Pan Head Screw, adjusting M3 x 12
11	00454900	Binding Head Tapping Screw, micro SW. M3 x 16
12	11602500	Micro SW. power
13	13206000	Gum Spacer, strain relief
14	00489300	E-type Washer, d = 4
15	00467100	Thrast Washer, d = 5 x 10 x 1.0
16	13733600	Spring, slide arm
17	47935600	DC Cord Cover
18	18125901	DD Motor Ass'y with control circuit board, F-5249
19	08320700	Washer Head Tapping Screw, DD Motor M4 x 12

4. MAIN PARTS REPLACEMENT

(See Fig. 4-5 on page 6 & Top View on page 4 & Bottom View on page 5)

A. Tonearm Ass'y

1) Loosen two pivotal screws. (See Fig. 4-1)
2) Extract a plug from F-5248 at tonearm holder.

B. Attachment of Tonearm Ass'y

1) Connect the plug.
2) Screw a pivotal screw at nut of tonearm ass'y.
3) Put the pivot on the groove of tonearm holder and depress the tonearm ass'y. (See Fig. 4-2)
4) Screw a pivotal screw at nut of the other side.

Note: Arrange wires of tonearm ass'y.

C. Auto Mechanism Ass'y, Restore Lever Ass'y ⑧, Lifter Stage ⑮, Spring ⑯ ⑰ Elevation Chip ⑱ & Arm Rest Ass'y ㉒.

1) Pull out the lifter lever knob.
2) Remove the tonearm ass'y.
3) Loosen the adjusting screw. (See Fig. 4-3)
4) Remove the bottom plate.
5) Remove the DD motor Ass'y with F-5249 board.
6) Remove the screw ④, screw Ⓢ and washer ⑤. (See Bottom View)
7) Pull out the hook of trip lever ③ from hole of restore lever.
8) Undo four hooks to remove auto mechanism ass'y.
9) Take off the spring of restore lever.
10) Remove the restore lever. (See Fig. 4-3)
11) Loosen one screw ⑦ to remove micro sw. plate ⑥.
12) Undo two hooks of tonearm holder to remove the stopper. (See Fig. 4-4)
13) Take off the tonearm holder with bushing.
14) Take out the F-5248 board.
15) Loosen one screw ⑲ to remove lifter stage ⑮, spring ⑯ ⑰ and elevation chip ⑱.
16) Loosen one screw ㉔ to remove hook ㉓.

Fig. 4-1

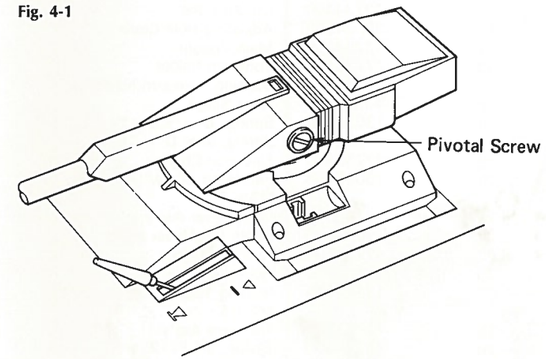

Fig. 4-3

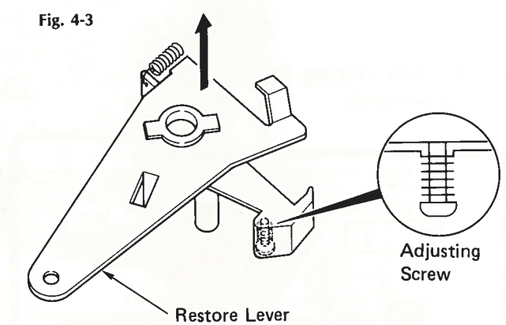

Fig. 4-2

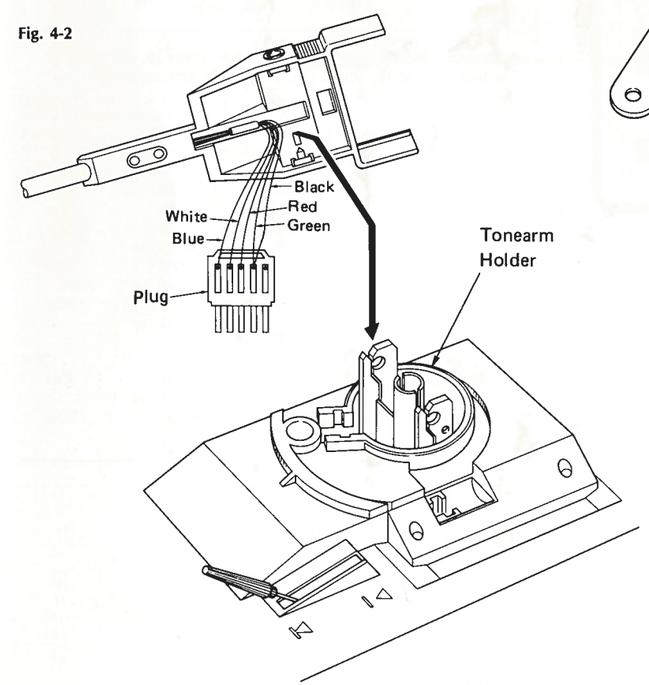

Fig. 4-4

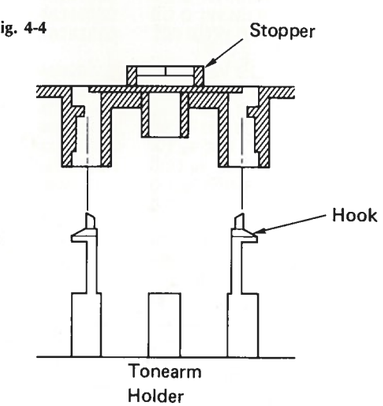

 DA-P550A/P555A

Fig. 4-5

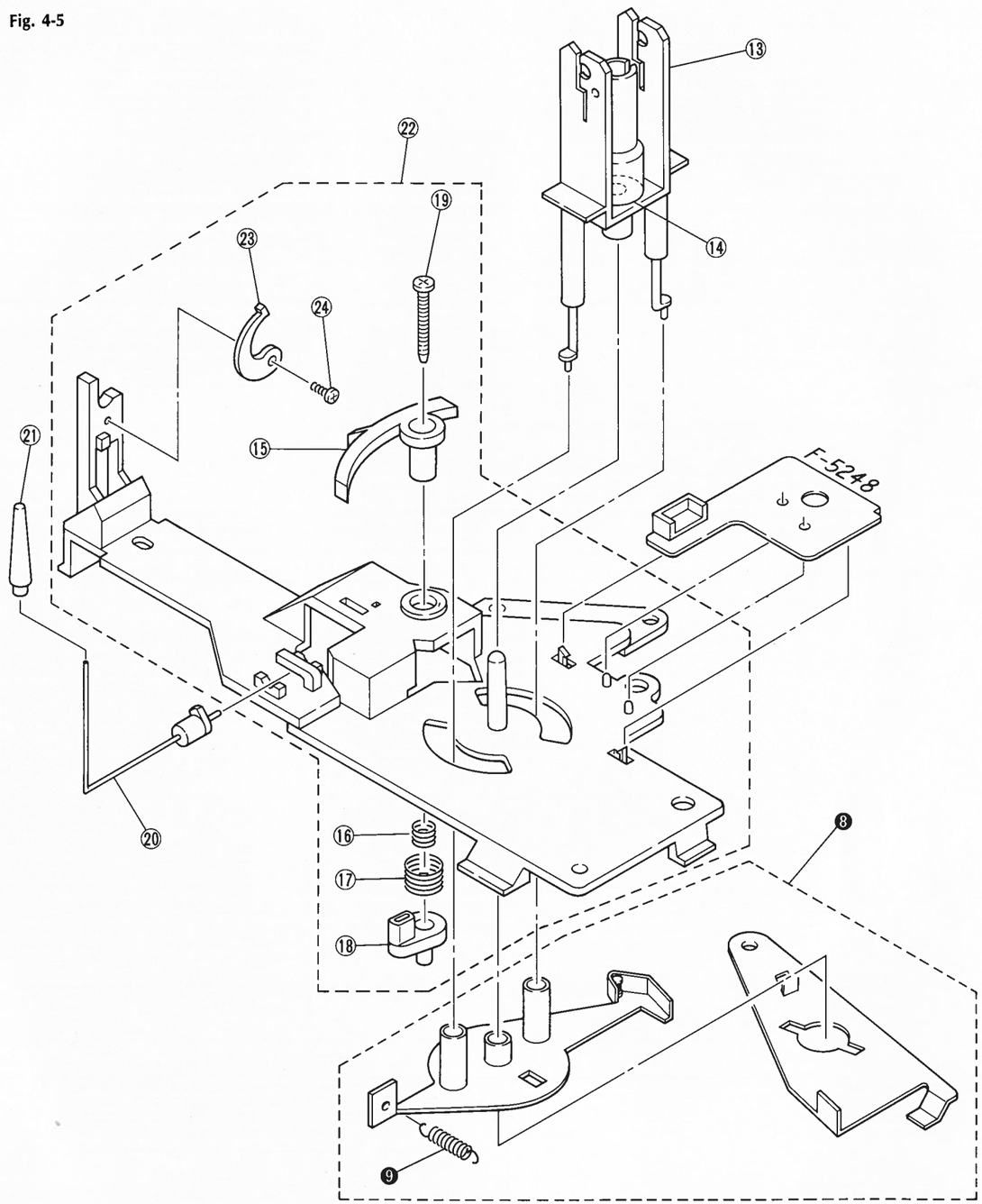

* The " ⑬ ~ ㉔ " are numberr of Top View.
* The " ❽ & ❾ " are number of Bottom View.

5. ADJUSTMENTS

< For this Adjustments, combined model DA-T750 (T755/T550/T550L/T555) or regulated DC power supply is required. >

• Presetting

If DA-T750 (T755/T550/T550L/T555) is used, connect DC power cord of the unit to DC OUT jack of DA-T750 (T755/T550/T550L/T555). If regulated DC power supply is used,connect it to the unit as Bottom view on page 5.

5-1. Adjustment of the Auto Return

1) The adjusting screw in top view is one to adjust the position of Auto Return when stylus reaches lead-out groove.
2) Make adjustment of the screw in such a way that stylus lifts up automatically around the middle way of lead-out groove.
   Namely turn the adjusting screw clockwise is for lagging and counterclockwise is for leading.
3) After adjusting the screw properly, check its operation a few times.

5-2. Adjustment of the Clearance between Stopper and Micro Switch

After replacing the micro switch, adjust the clearance between Stopper and micro switch (See Fig. 5-1) to be approximately 0.3 mm.

5-3. Adjustment of the main gear

When the main gear makes abnormal mechanical noise caused by touching to the pinion gear during playing record disc, adjust its position with cam to make even clearance between the circular are portion of the main gear and the pinion gear.

5-4. Speed Adjustment

• See Bottom View on page 5.

STEP	SPEED SELECTOR	ADJUST	ADJUST FOR
1.	33-1/3 r.p.m.	eVR1 (F-5249)	Strobo marking pattern appears to stand still.
2.	45 r.p.m.	eVR2 (F-5249)	Same as above

Fig. 5-1

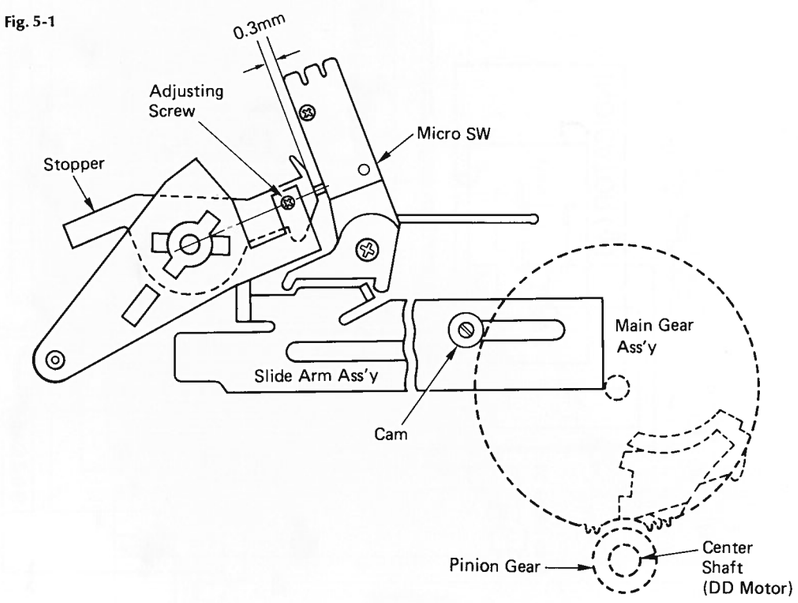

DA-P550A/P555A

6. SCHEMATIC DIAGRAM

- Design and specifications subject to change without notice for improvement.
- La présention et les spécifications sont susceptibles d'être modifiées sans préavis par suites d'améliorations éventuelles.
- Änderungen, die dem technischen Fortschritt dienen, bleiben vorbehalten.

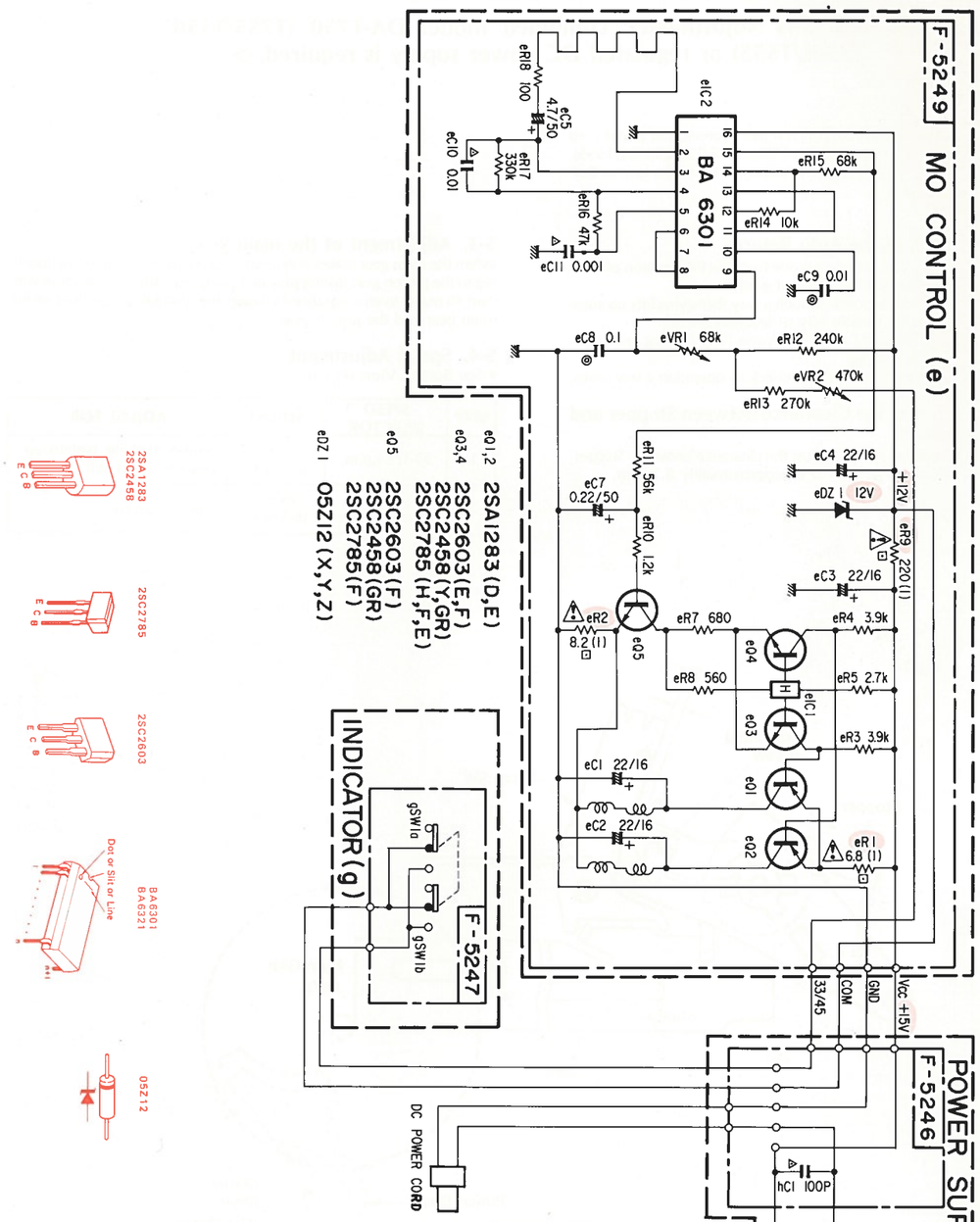

Each D.C Voltage measured the instruments discribed below shows the nominal value volt at 33 1/3 r.p.m.
Measuring instruments
Volt Meter D.C 20kΩ/V, A.C 1kΩ/V
Oscilloscope 5MHz

⚠ is Safety Part.
Use only replacement parts recommended by the manufacturer.

SYMBOL
⚠ Barrier Layer Capacitor
◎ Film Capacitor
⊡ Non-Inflammable Resistor

RESISTORS
Are in ohms, 1/4 Watts, ±5%
Tolerance Unless Otherwise Noted. k: kΩ, M: MΩ

CAPACITORS
Are in μF, Unless Otherwise Noted. P: pF

Electrolytic Capacitor
Capacitance (μF)/Volt (V)

7. PACKING LIST

Parts No.	Stock No.	Description
1	———	Protector Board, upper
2	13142400	Dust Cover Ass'y
3	47859600	Polyethylene Bag A
4	13140800	Turntable Sheet
5	47870400	Platter, turntable
6	91165200	Polyethylene Bag B
7	47777600	Styrofoam Packing, front
8	47777700	Styrofoam Packing, rear
9	———	Accessories Cover
10	———	Turntable Unit
11	91122710	Polyethylene Bag G
12	27045000	Carton Case (DA-P550A) < Silver Model >
	27045800	Carton Case (DA-P550A.M) < Silver Model >
	27045900	Carton Case (DA-P550A) < Black Model >
	27045700	Carton Case (DA-P550A.M) < Black Model >
	27046500	Carton Case (DA-P555A) < Black Model >
	27061200	Carton Case (DA-P555A.M) < Black Model >

- **Note:** There are two types of unit in DA-P550A and P555A
  1) The unit with a Dust Cover Ass'y.
  2) The unit without a Dust Cover Ass'y.
  ("M" mark is indicated on the Carton Case.)

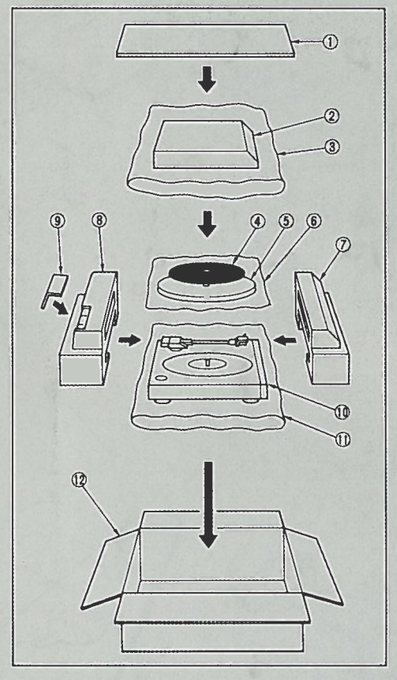

Sansui

SANSUI ELECTRIC CO., LTD.: 14-1, Izumi 2-chome, Suginami-ku, Tokyo 168 Japan
PHONE: (03) 324-8891/TELEX: 232-2076 (International Division)
SANSUI ELECTRONICS CORPORATION: 1250 Valley Brook Ave. Lyndhurst, N.J. 07071 U.S.A.
17150 South Margay Ave. Carson, California 90746 U.S.A.
3036 Koapaka Street. Honolulu, Hawaii 96819 U.S.A.
SANSUI ELECTRONICS (U.K.) LTD.: Unit 10A, Lyon Industrial Estate, Rockware Avenue, Greenford, Middx UB6, OAA, England
SANSUI ELECTRONICS G.M.B.H.: Pau Ehrich Strasse 8, 6074 Rödermark 2, West Germany

(SM1-276) Printed in Japan (953320P) <Stock No.36520500>