Deze download wordt u aangeboden door **Pick-upnaalden.nl**
Fazantendreef 17-19
8251 JR Dronten
T: 0321 769022
E: info@pick-upnaalden.nl
W: www.pickupnaalden.com
W: www.pickupnaald.com

Facebook: www.facebook.com/pickupnaalden
Twitter: twitter.com/Pickupnaalden
Google+ : plus.google.com/114738445546162436900

AKAI SERVICE MANUAL

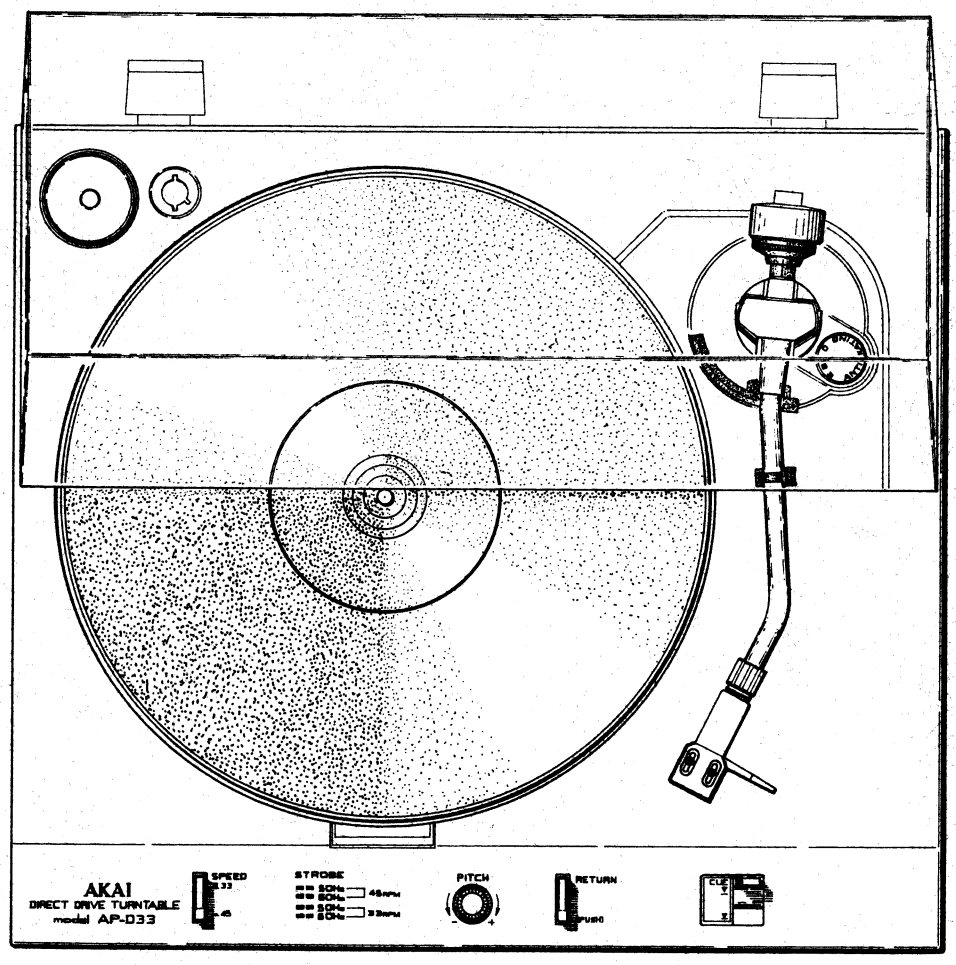

AUTO-RETURN TURNTABLE

MODEL AP-B21/C

DIRECT DRIVE AUTO-RETURN TURNTABLE

MODEL AP-D33/C

QUARTZ LOCK DIRECT DRIVE AUTO-RETURN TURNTABLE

MODEL AP-Q55/C

AP-D33/C

AP-Q55/C

THIS MANUAL IS APPLICABLE TO BOTH SILVER AND BLACK PANEL MODELS

SECTION 1 MODEL AP-B21/C SERVICE MANUAL 3
SECTION 2 MODEL AP-D33/C and AP-Q55/C SERVICE MANUAL 9
SECTION 3 PARTS LIST..... 37
SECTION 4 SCHEMATIC DIAGRAM 56

SECTION 1

AUTO-RETURN TURNTABLE

MODEL AP-B21/C

SERVICE MANUAL

TABLE OF CONTENTS

I. TECHNICAL DATA 3
II. MECHANISM ADJUSTMENTS 4
III. CLASSIFICATION OF VARIOUS P.C BOARDS 6
1. P.C BOARD TITLES AND IDENTIFICATION NUMBERS 6
2. COMPOSITION OF VARIOUS P.C BOARDS 6

I. TECHNICAL DATA

TURNTABLE	Aluminum alloy die cast
DRIVE SYSTEM & MECHANISM	Belt Drive, Auto-return
MOTOR	4-pole synchronus motor
SPEED	33-1/3, 45 rpm
WOW AND FLUTTER	0.05% (DIN)
RUMBLE	44 dB (DIN A), 65 dB (DIN B)
TONE ARM	J-shaped static balanced type
EFFECTIVE ARM LENGTH	220 mm
STYLUS PRESSURE ADJUSTMENT RANGE	0 to 3 grams
APPLICABLE CARTRIDGE WEIGHT	4 to 9 grams
ARM LIFTER	Oil damped
OVERHANG	15 mm
OFFSET ANGLE	22°30′
HORIZONTAL TRACKING ERROR ANGLE	+3°, −1°
SHELL WEIGHT	7 grams
CARTRIDGE	VM (Dual magnet) type (Model AP-B21 does not include cartridge)
OUTPUT VOLTAGE	5 mV (DIN)
CHANNEL SEPARATION	More than 18dB (DIN)
OPTIMAL STYLUS PRESSURE	2 grams
POWER REQUIREMENTS	120V, 60Hz for U.S.A. and Canada 220V, 50Hz for Europe except UK 240V, 50Hz for UK and Australia 110–120V/220–240V, 50/60Hz switchable for other countries
DIMENSIONS	440(W) x 135(H) x 355(D) mm (17.3 x 5.3 x 14.0 inches)
WEIGHT	5.9 kg (13.0 lbs)

*** For improvement purposes, specifications and design are subject to change without notice.**

1. CAPSTAN HEIGHT ADJUSTMENT

1) Set Speed Selector to "33".
2) Loosen the Capstan set screw.
3) Bring the Drive Belt Guide and Capstan to the same height, than tighten set screw. (See Fig. 1)
4) After proper adjustment, install Platter and Drive Belt and turn on motor. Switch Speed Selector between "33" and "45" and confirm that Drive Belt is revolving smoothly through the center of the Drive Belt Guide.

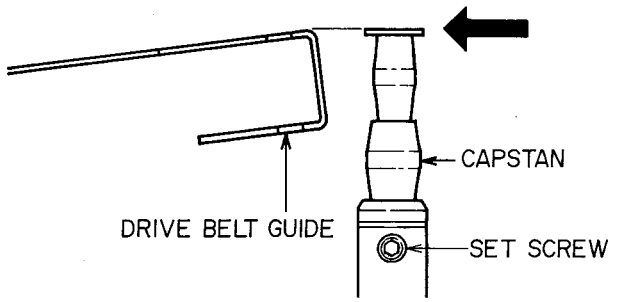

Fig. 1

2. ARM LIFTER HEIGHT ADJUSTMENT

1) Bring Tone Arm to the up "▼" condition.
2) To bring the tip of the stylus to about 8 mm from the surface of the record (Fig. 2), adjust the height of the Tone Arm Lifter and tighten the set screw. (See Fig. 3)

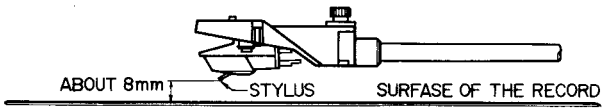

Fig. 2

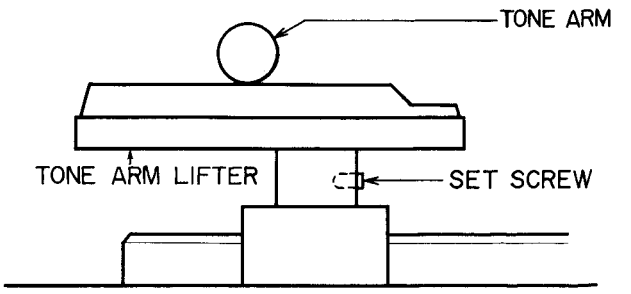

Fig. 3

3. AUTO-RETURN POSITION ADJUSTMENT

1) Connect the Power cord.
2) Move the Tone Arm and turn on the power. Press the START/CUT Switch and set the Arm in the down "▼" condition.
3) With your fingers, slowly move the Tone Arm towards the center of the platter and set the adjust screw shown in Fig. 5 so that return operation begins when the stylus is about 53 mm from the spindle. (See Fig. 4)

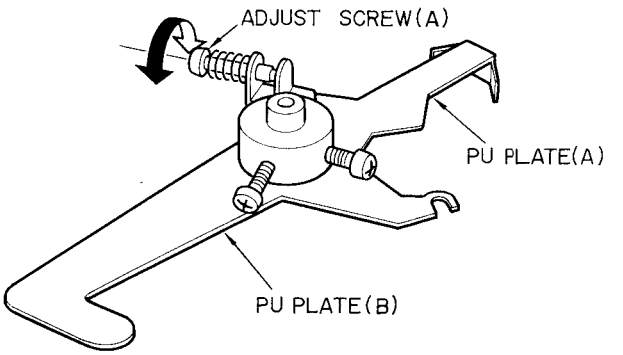

Fig. 5

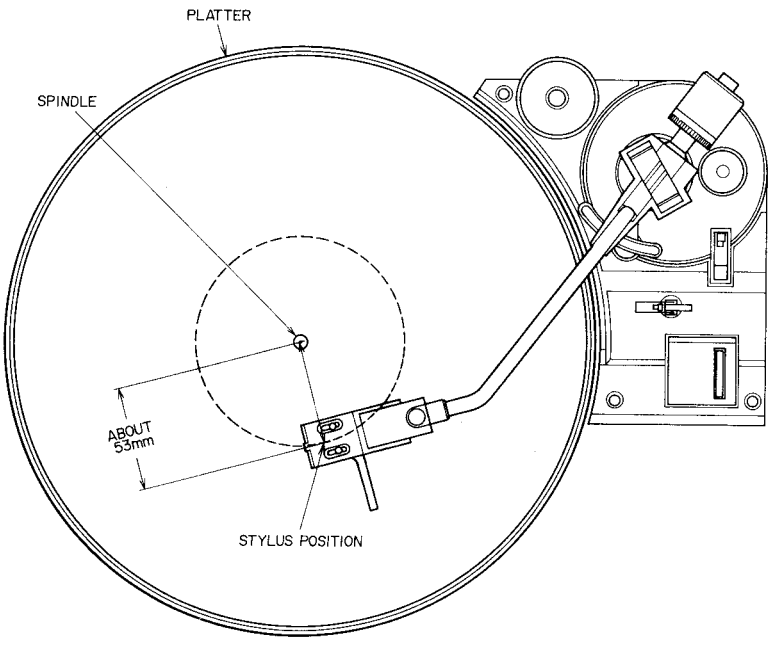

Fig. 4

III. CLASSIFICATION OF VARIOUS P.C BOARDS

1. P.C BOARD TITLES AND IDENTIFICATION NUMBERS

P.C Board Title	P.C Board Number
Power Supply P.C Board	AP-9027

2. COMPOSITION OF VARIOUS P.C BOARDS

1) POWER SUPPLY P.C BOARD AP-9027 (U/T)

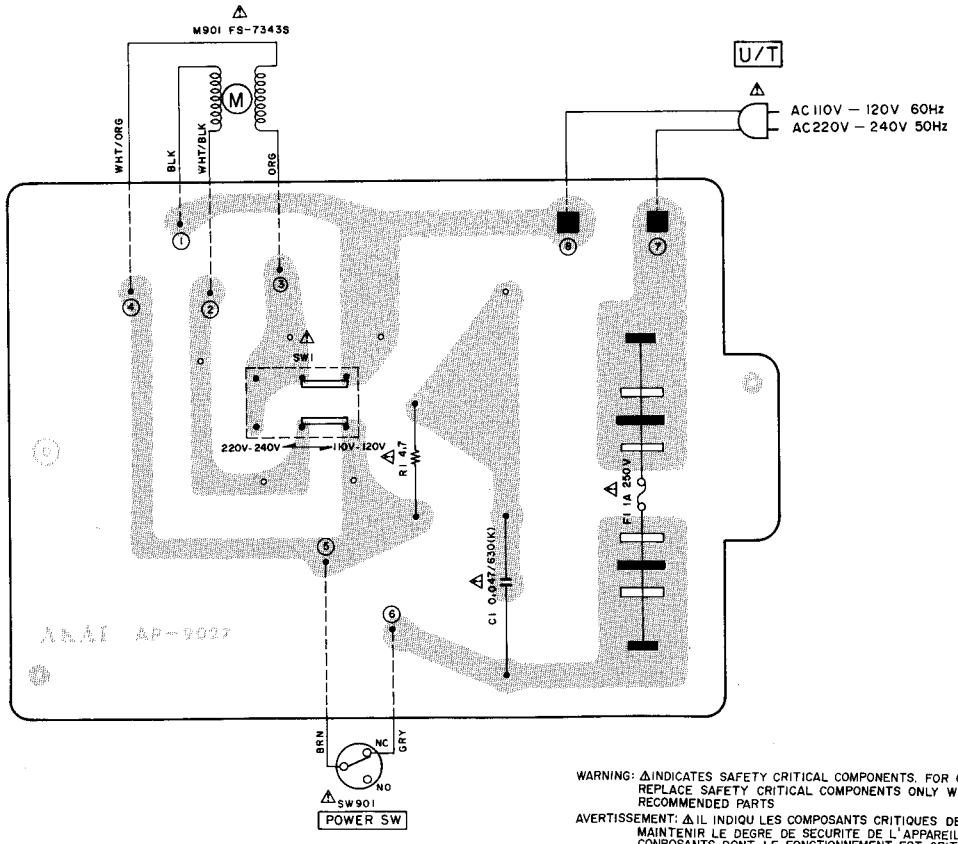

WARNING: ⚠INDICATES SAFETY CRITICAL COMPONENTS. FOR CONTINUED SAFETY, REPLACE SAFETY CRITICAL COMPONENTS ONLY WITH MANUFACTURER'S RECOMMENDED PARTS

AVERTISSEMENT: ⚠IL INDIQU LES COMPOSANTS CRITIQUES DE SÛRETÉ. POUR MAINTENIR LE DEGRE DE SECURITE DE L'APPAREIL NE REMPLACER LES CONPOSANTS DONT LE FONCTIONNEMENT EST CRITIQUE POUR LA SECURITE QUE PAR DES PIECES RECOMMANDEES PAR LE FABRICANT

2) POWER SUPPLY P.C BOARD AP-9027 (CSA)

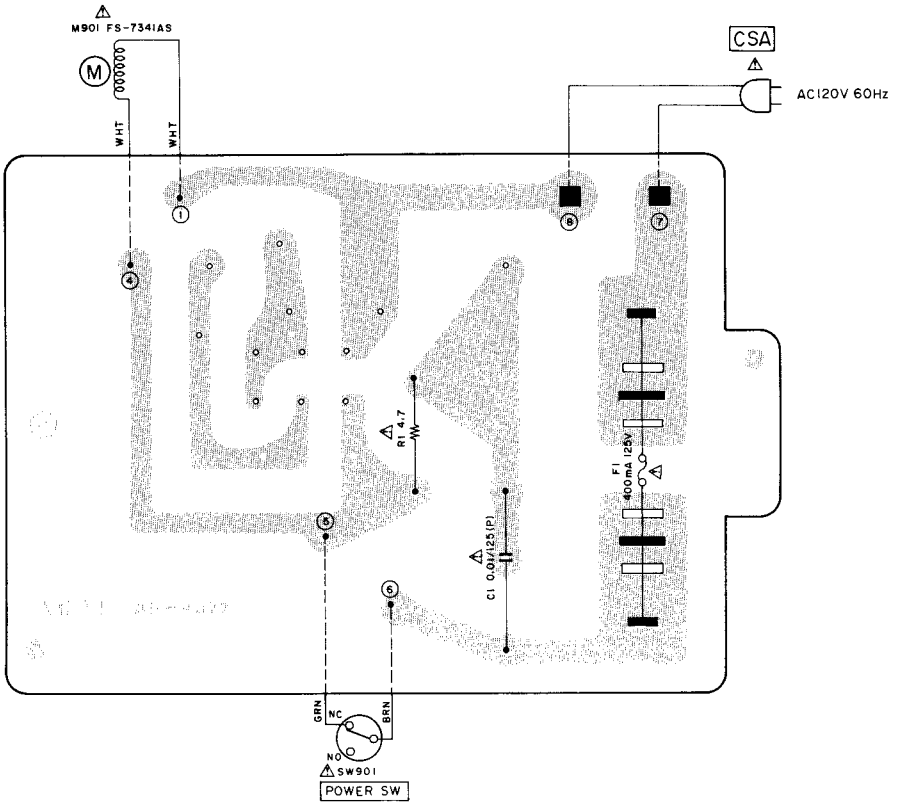

3) POWER SUPPLY P.C BOARD AP-9027 (AAL)

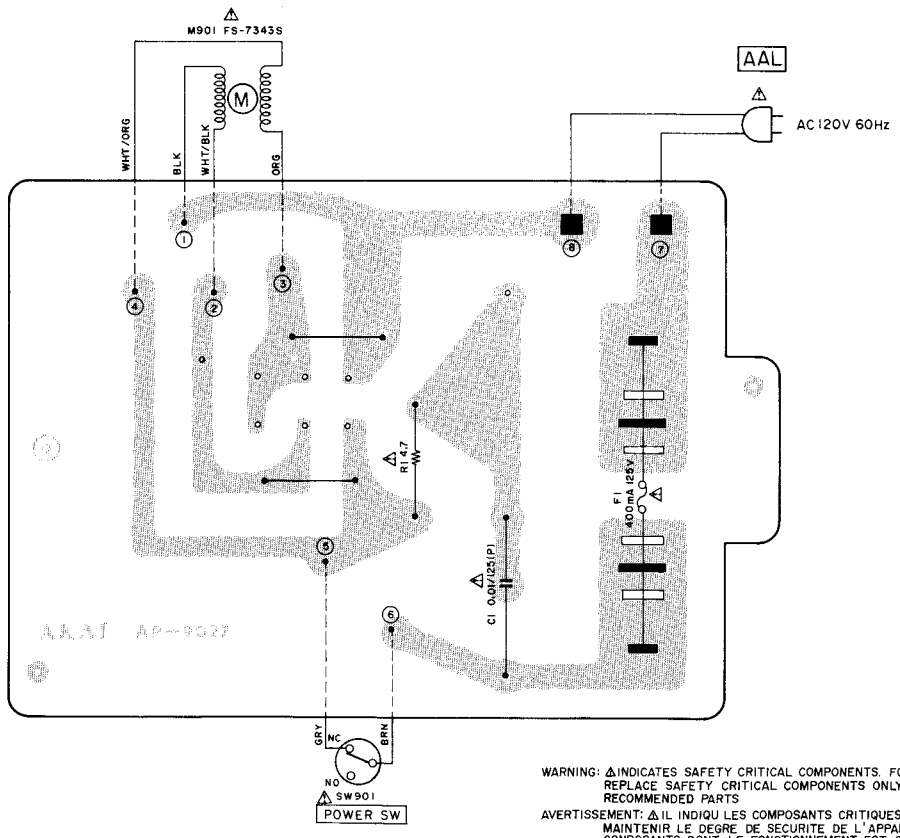

WARNING: ⚠INDICATES SAFETY CRITICAL COMPONENTS. FOR CONTINUED SAFETY, REPLACE SAFETY CRITICAL COMPONENTS ONLY WITH MANUFACTURER'S RECOMMENDED PARTS

AVERTISSEMENT: ⚠IL INDIQU LES COMPOSANTS CRITIQUES DE SÛRETÉ. POUR MAINTENIR LE DEGRE DE SECURITE DE L'APPAREIL NE REMPLACER LES COMPOSANTS DONT LE FONCTIONNEMENT EST CRITIQUE POUR LA SECURITE QUE PAR DES PIECES RECOMMANDEES PAR LE FABRICANT

4) POWER SUPPLY P.C BOARD AP-9027 (CEE, UK, SAA)

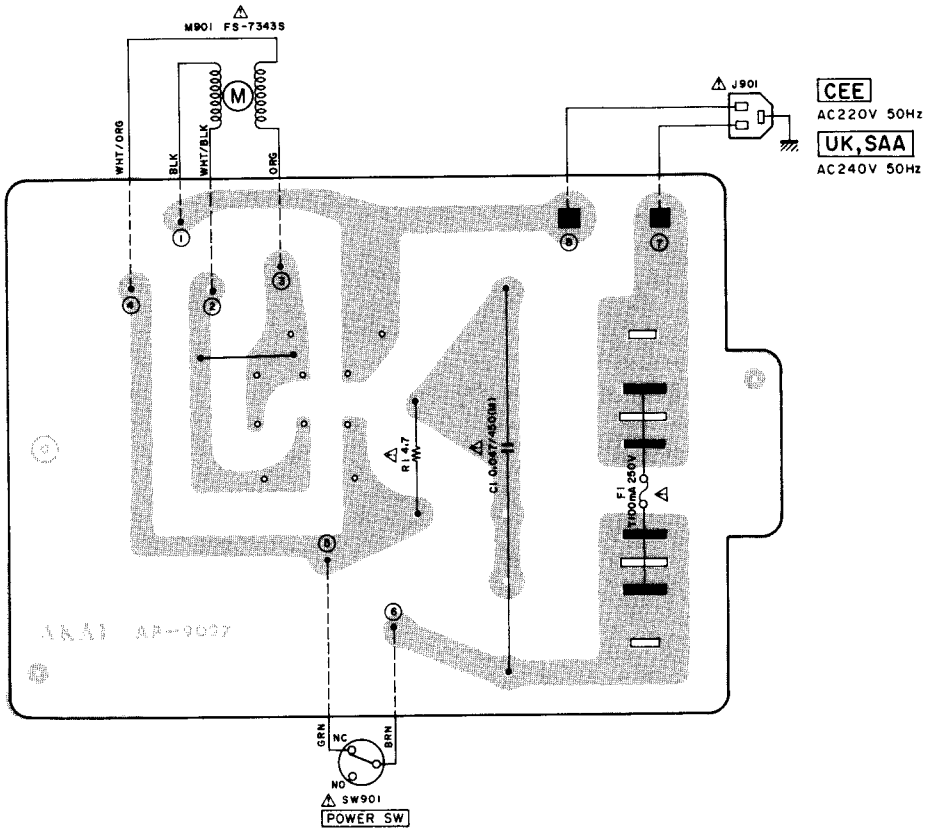

WARNING: ⚠INDICATES SAFETY CRITICAL COMPONENTS. FOR CONTINUED SAFETY, REPLACE SAFETY CRITICAL COMPONENTS ONLY WITH MANUFACTURER'S RECOMMENDED PARTS

AVERTISSEMENT: ⚠IL INDIQU LES COMPOSANTS CRITIQUES DE SÛRETÉ. POUR MAINTENIR LE DEGRE DE SECURITE DE L'APPAREIL NE REMPLACER LES CONPOSANTS DONT LE FONCTIONNEMENT EST CRITIQUE POUR LA SECURITE QUE PAR DES PIECES RECOMMANDEES PAR LE FABRICANT

SECTION 2

DIRECT DRIVE AUTO-RETURN TURNTABLE

MODEL AP-D33/C

QUARTZ LOCK DIRECT DRIVE AUTO-RETURN TURNTABLE

MODEL AP-Q55/C

SERVICE MANUAL

TABLE OF CONTENTS

I. **TECHNICAL DATA** 10
1. MODEL AP-D33/C 10
2. MODEL AP-Q55/C 10
II. **DISMANTLING OF UNIT** 12
III. **CONTROLS** 13
1. MODEL AP-D33/C 13
2. MODEL AP-Q55/C 13
IV. **PRINCIPAL PARTS LOCATION** 15
1. MODEL AP-D33/C 15
2. MODEL AP-Q55/C 16
V. **VOLTAGE AND CYCLE CONVERSION** 17
VI. **MECHANICAL ADJUSTMENTS** 18
1. STYLUS PRESSURE ADJUSTMENT 18
2. OVERHANG ADJUSTMENT 19
3. AUTO-RETURN ADJUSTMENT 20
4. ARM LIFTER ADJUSTMENT 20
5. RETURN PLUNGER INSTALLATION POSITION ADJUSTMENT 22
VII. **ELECTRICAL ADJUSTMENTS** 23
1. MODEL AP-D33/C 23
2. MODEL AP-Q55/C 24
VIII. **CLASSIFICATION OF VARIOUS P.C BOARDS** 26
1. P.C BOARD TITLES AND IDENTIFICATION NUMBERS 26
2. MODEL AP-D33/C COMPOSITION OF VARIOUS P.C BOARDS 27
3. MODEL AP-Q55/C COMPOSITION OF VARIOUS P.C BOARDS 30

I. TECHNICAL DATA

1. MODEL AP-D33/C

TURNTABLE	Aluminum alloy diecast
DRIVE SYSTEM & MECHANISM	Direct Drive, Auto-return
MOTOR	DC Servo Motor
SPEED & PITCH CONTROL	33-1/3, 45 rpm ± 5%
SPEED DEVIATION	Less than ± 0.003%
WOW AND FLUTTER	0.05% (DIN) 0.035% (JIS)
RUMBLE	45 dB (DIN A) 70 dB (DIN B)
TONE ARM	S-shaped Static Balanced
EFFECTIVE ARM LENGTH	220 mm
STYLUS PRESSURE ADJUSTMENT RANGE	0 to 3 grams
APPLICABLE CARTRIDGE WEIGHT	4 to 12 grams
ARM LIFTER	Oil damped
OVERHANG	15 mm
OFFSET ANGLE	22°30′
HORIZONTAL TRACKING ERROR ANGLE	+3°5′, −1°13′
SHELL WEIGHT	8.2 grams
CARTRIDGE	VM (Dual Magnet) type (Model AP-D33 does not include cartridge)
OPTIMAL STYLUS PRESSURE	2 grams
OUTPUT VOLTAGE	5 mV (DIN)
CHANNEL SEPARATION	More than 20 dB (DIN)
FREQUENCY RESPONSE	0 dB at 1 kHz, ± 2 dB at 10 kHz
STATIC VERTICAL COMPLIANCE	17.7×10^{-6} cm/dyne
STATIC HORIZONTAL COMPLIANCE	29.1×10^{-6} cm/dyne
POWER REQUIREMENTS	100V, 50/60 Hz for Japan 120V, 60 Hz for USA and Canada 220V, 50 Hz for Europe except UK 240V, 50 Hz for UK and Australia 110–120V/220–240V, 50/60 Hz switchable for other countries
POWER CONSUMPTION	5W
DIMENSIONS	440(W) x 140(H) x 403(D) mm (17.3 x 5.5 x 15.8 inches)
WEIGHT	5.5 kg (12.1 lbs)

* For improvement purposes, specifications and design are subject to change without notice.

2. MODEL AP-Q55/C

TURNTABLE	Aluminum alloy diecast
DRIVE SYSTEM & MECHANISM	Quartz locked direct drive, Auto-return
MOTOR	DC Servo
SPEED & PITCH CONTROL	33-1/3, 45 rpm ± 5%
SPEED DEVIATION	Less than ± 0.003%
WOW & FLUTTER	0.05% (DIN), 0.035% (JIS)
RUMBLE	45 dB (DIN A) 70 dB (DIN B)
TONE ARM	S-shaped Static Balanced
EFFECTIVE ARM LENGTH	220 mm
STYLUS PRESSURE ADJUSTMENT RANGE	0 to 3 grams
APPLICABLE CARTRIDGE WEIGHT	4 to 12 grams
ARM LIFTER	Oil damped
OVERHANG	15 mm
OFFSET ANGLE	22°30′
HORIZONTAL TRACKING ERROR ANGLE	+3°5′, −1°13′
SHELL WEIGHT	8.2 grams
CARTRIDGE	VM (Dual Magnet) type (Model AP-Q55 does not include cartridge)
OPTIMAL STYLUS PRESSURE	2 grams
OUTPUT VOLTAGE	5 mV
CHANNEL SEPARATION	More than 20 dB (DIN)
FREQUENCY RESPONSE	0 dB at 1 kHz, ± 2 dB at 10 kHz
STATIC VERTICAL COMPLIANCE	17.7×10^{-6} cm/dyn
STATIC HORIZONTAL COMPLIANCE	29.1×10^{-6} cm/dyn
POWER REQUIREMENTS	100V, 50/60 Hz for Japan 120V, 60 Hz for USA and Canada 220V, 50 Hz for Europe except UK 240V, 50 Hz for UK and Australia 110–120V/220–240V, 50/60 Hz switchable for other countries
POWER CONSUMPTION	6W
DIMENSIONS	440(W) x 140(H) x 403(D) mm (17.3 x 5.5 x 15.8 inches)
WEIGHT	5.7 kg (12.6 lbs)

*** For improvement purposes, specifications and design are subject to change without notice.**

II. DISMANTLING OF UNIT

In case of trouble, etc. necessitating dismantling, please dismantle in the order shown in the photographs. Reassemble in reverse order.

3

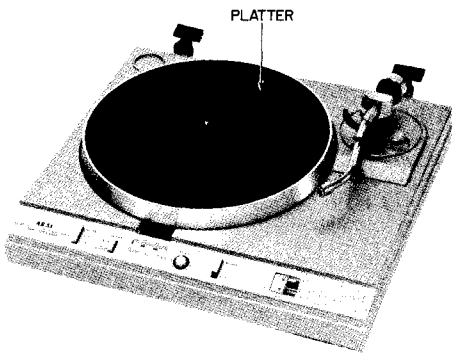

1

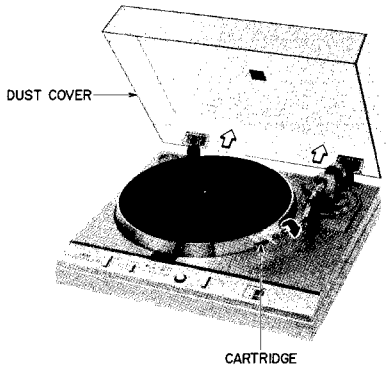

4

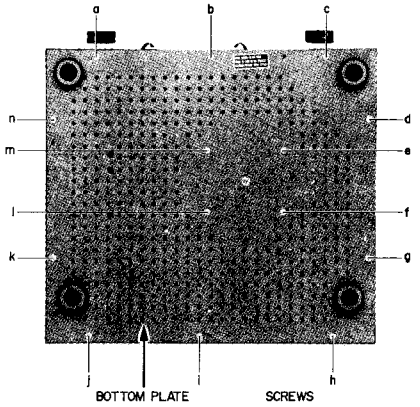

2

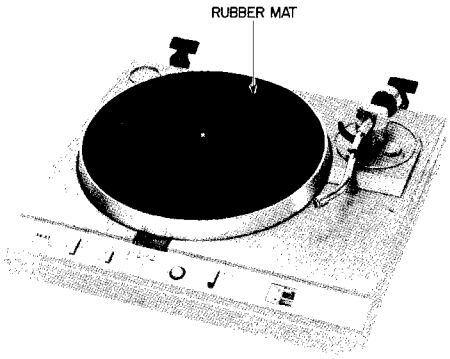

5

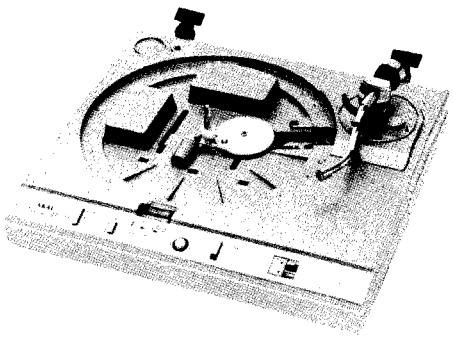

III. CONTROLS

1. MODEL AP-D33/C

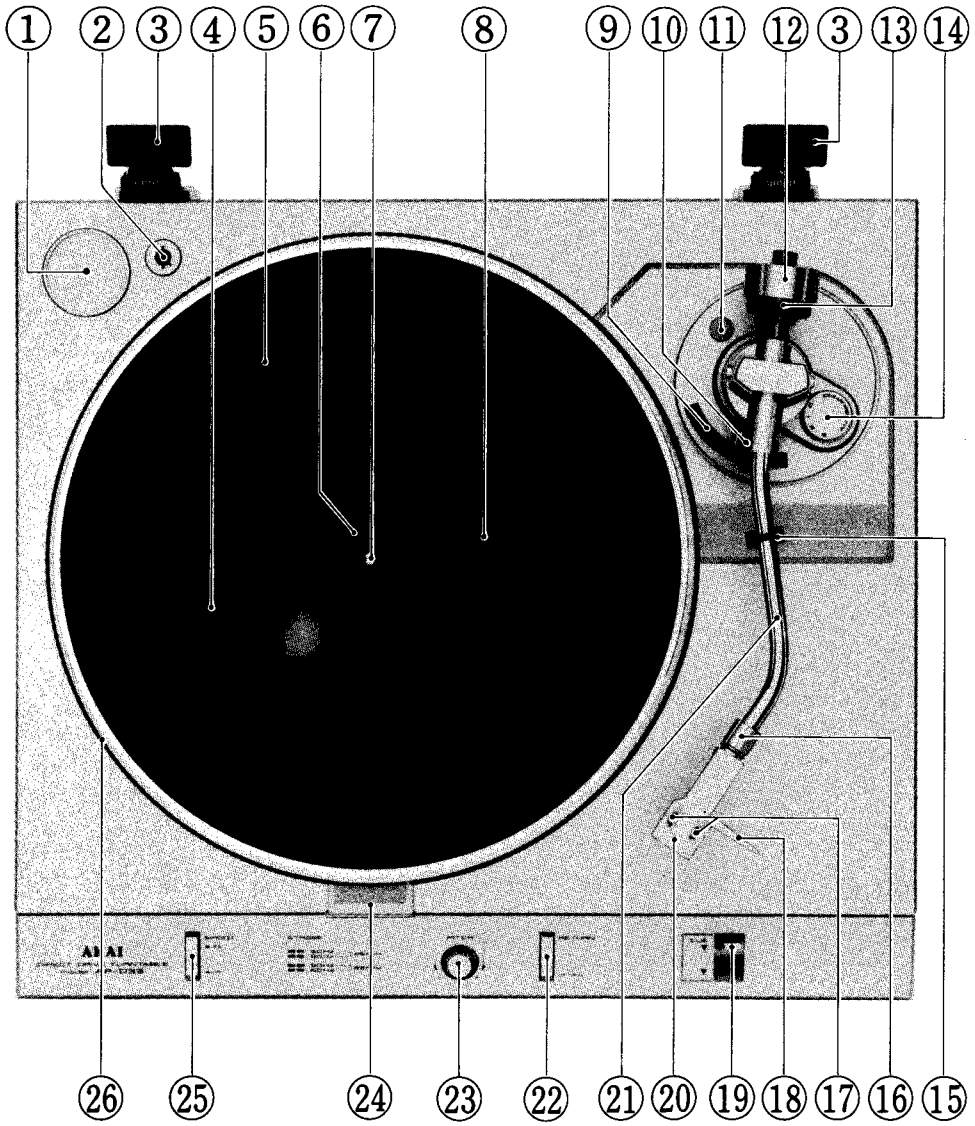

Fig. 1 Controls (Model AP-D33/C)

1. 45 rpm ADAPTER HOLDER
2. CARTRIDGE SHELL HOLDER
3. HINGES
4. PLATTER
5. RUBBER MAT
6. GROOVE FOR OVERHANG ADJUSTMENT
7. SPINDLE
8. GROOVE FOR AUTO-RETURN ADJUSTMENT
9. TONE ARM LIFTER
10. TONE ARM LIFTER HEIGHT ADJUSTMENT SCREW
11. AUTO-RETURN ADJUSTMENT SCREW CAP
12. MAIN WEIGHT
13. STYLUS PRESSURE SCALE RING
14. ANTI-SKATING ADJUSTER
15. TONE ARM REST
16. LOCKING NUT
17. CARTRIDGE RE-SETTING SCREWS
18. CARTRIDGE SHELL FINGER LEVER
19. CUEING (CUE) LEVER (▼ to lift, ▼ to lower)
20. CARTRIDGE SHELL
21. TONE ARM
22. RETURN SWITCH
23. PITCH CONTROL
24. STROBE SCOPE WINDOW
25. 33/45 rpm SPEED SELECTOR (▮ 33, ▬ 45)
26. STROBE MARKINGS

*** A cartridge is not included with AP-D33.**

2. MODEL AP-Q55/C

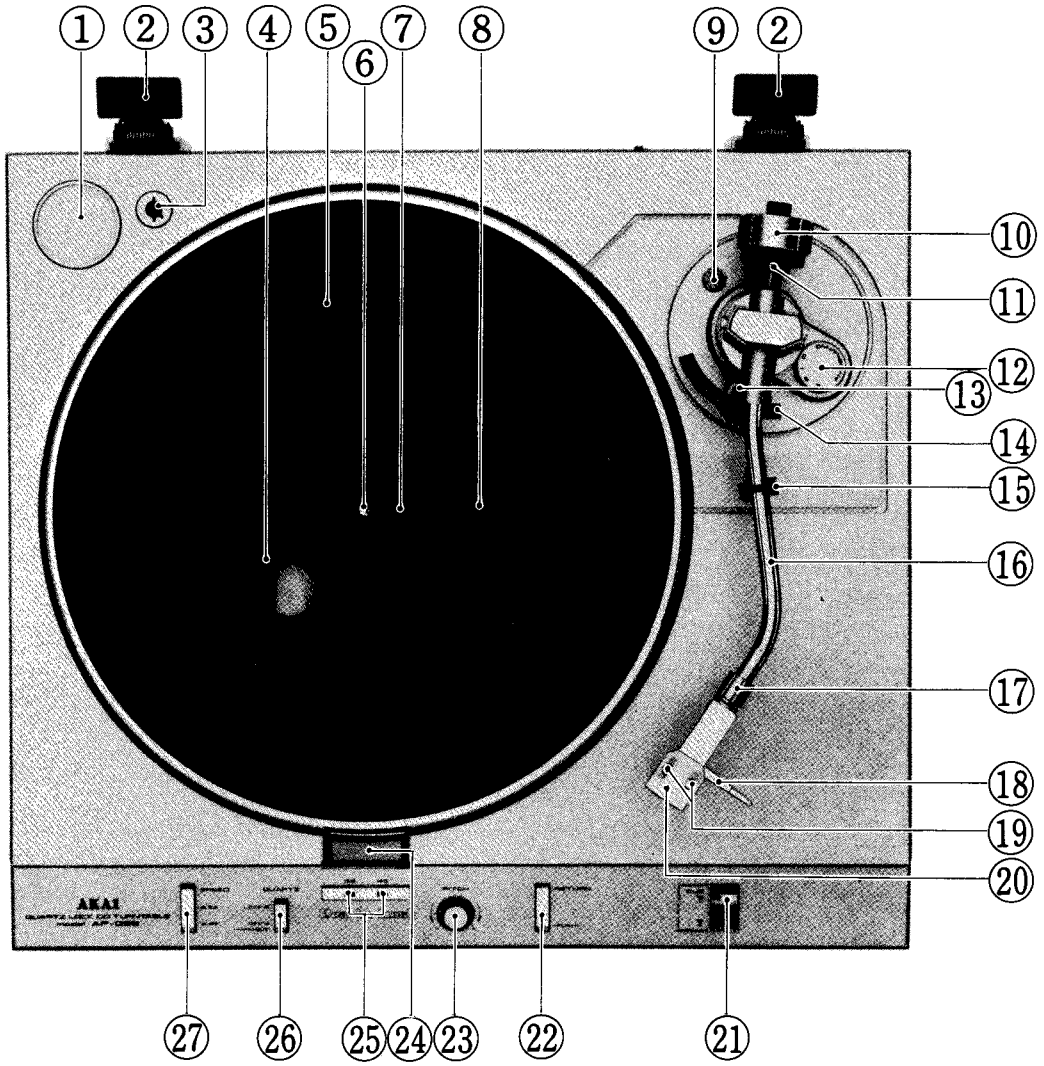

Fig. 2 Controls (Model AP-Q55/C)

1. 45 rpm ADAPTER HOLDER
2. HINGES
3. CARTRIDGE SHELL HOLDER
4. PLATTER
5. RUBBER MAT
6. SPINDLE
7. GROOVE FOR OVERHANG ADJUSTMENT
8. GROOVE FOR AUTO-RETURN ADJUSTMENT
9. AUTO-RETURN ADJUSTMENT SCREW CAP
10. MAIN WEIGHT
11. STYLUS PRESSURE SCALE RING
12. ANTI-SKATING ADJUSTER
13. TONE ARM LIFTER ELEVATION ADJUSTMENT SCREW
14. TONE ARM LIFTER
15. TONE ARM REST
16. TONE ARM
17. LOCKING NUT
18. CARTRIDGE SHELL FINGER LEVER
19. CARTRIDGE RE-SETTING SCREWS
20. CARTRIDGE SHELL
21. CUEING LEVER (CUE) (▼ to lift, ▼ to lower)
22. RETURN SWITCH
23. PITCH CONTROL
24. STROBE SCOPE WINDOW
25. 33 and 45 rpm SPEED INDICATORS
26. QUARTZ LOCK SWITCH
27. SPEED SELECTOR (▮ 33 rpm, ▬ 45 rpm)

* A cartridge is not included with AP-Q55.

IV. PRINCIPAL PARTS LOCATION

1. MODEL AP-D33/C

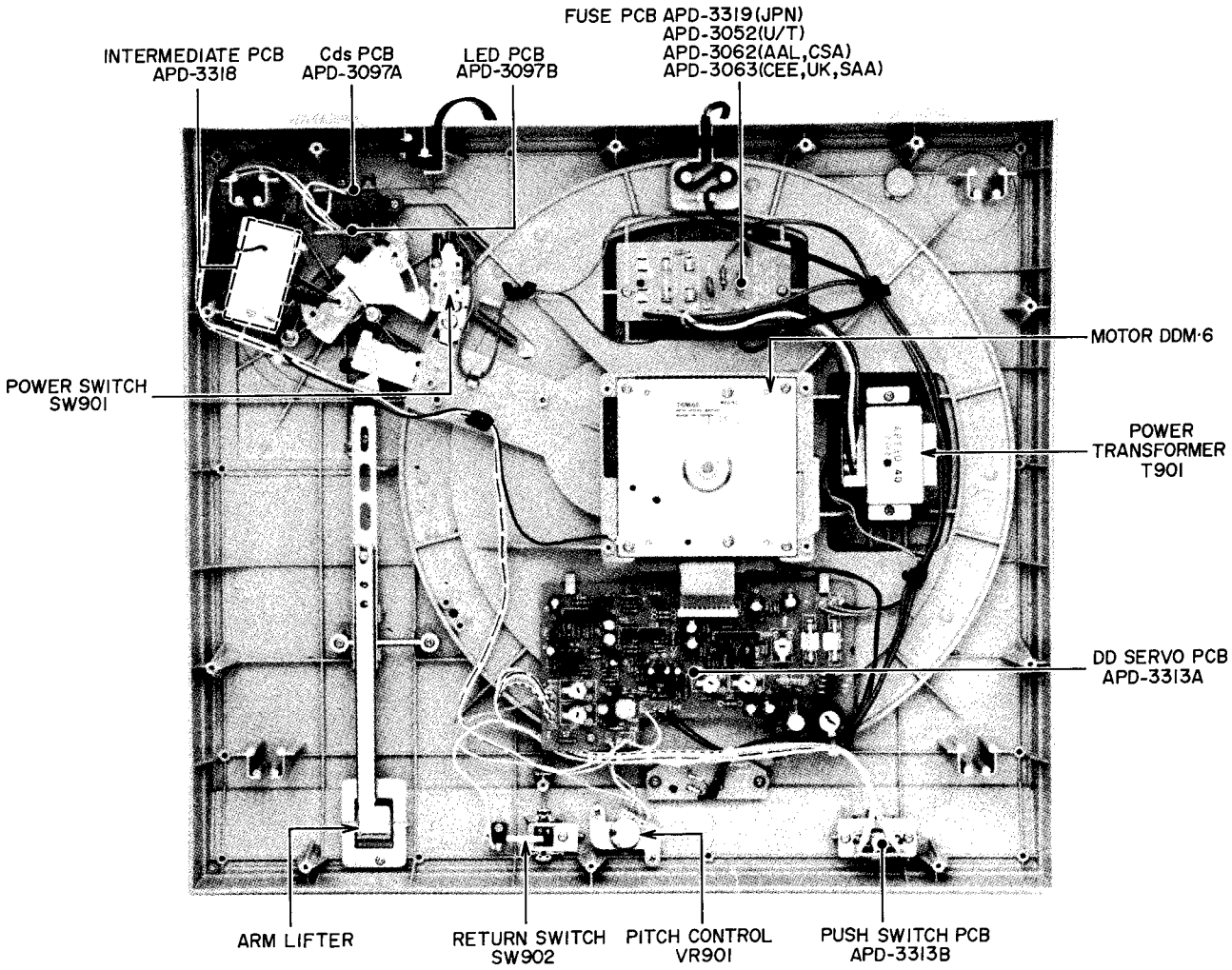

Fig. 3 Bottom View (Model AP-D33/C)

2. MODEL AP-Q55/C

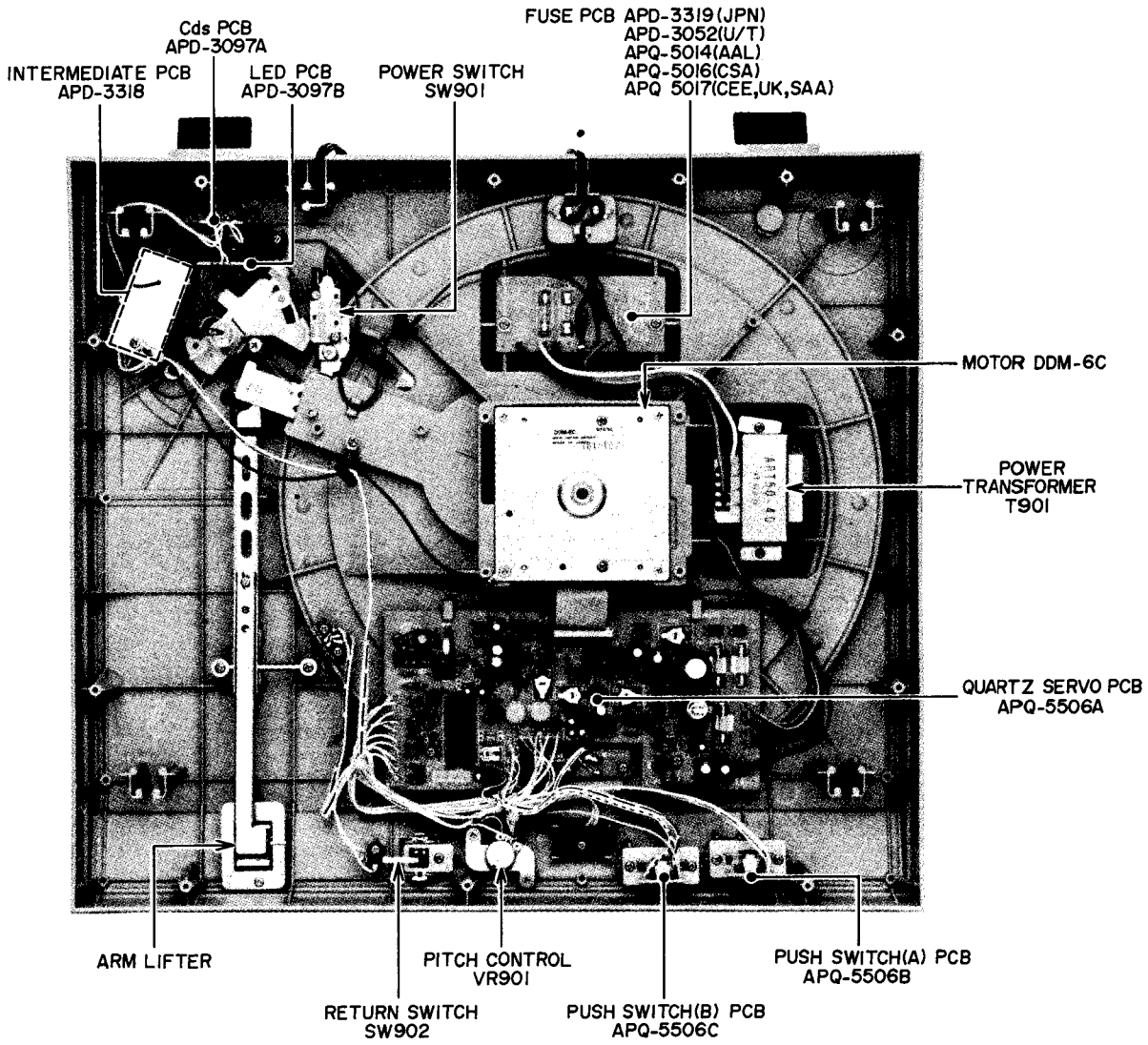

Fig. 4 Bottom View (Model AP-Q55/C)

V. VOLTAGE AND CYCLE CONVERSION

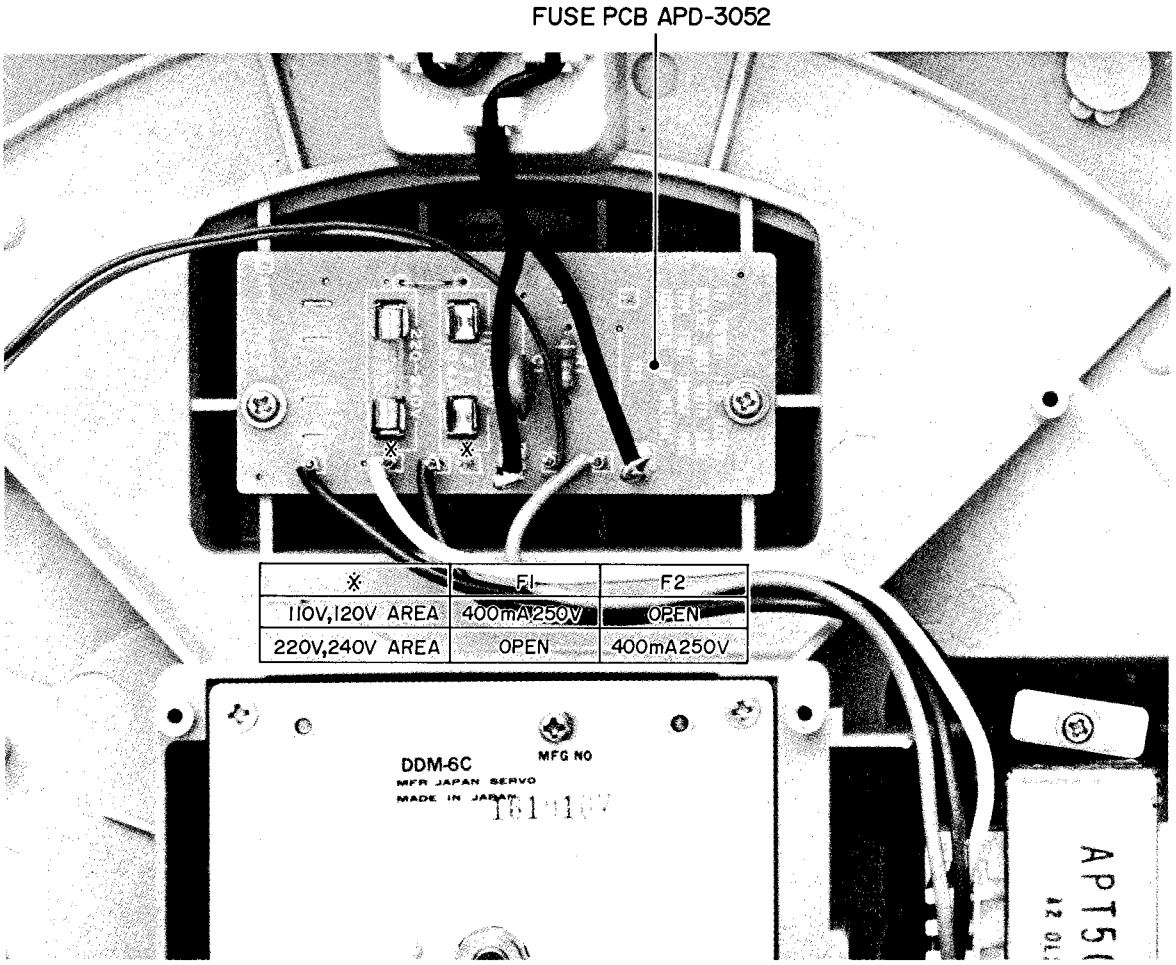

Fig. 5 Voltage Conversion (U/T Model only)

1. VOLTAGE CONVERSION

Models for JPN, Canada, USA, Australia and Europe are not equipped with this facility. This machine can be set to 110–120V/220–240V as required.

Each machine is preset at the factory according to destination but if voltage change is necessary it can be accomplished as follows only by qualified personnel.

1) Disconnect power supply cord.
2) Remove the bottom cover.
3) Remove existing Line Voltage Fuse and insert required Line Voltage Fuse in the proper fuse holder according to the printed instructions.

2. CYCLE CONVERSION

With DC servo motor, cycle conversion is not necessary.

VI. MECHANICAL ADJUSTMENTS

1. STYLUS PRESSURE ADJUSTMENT

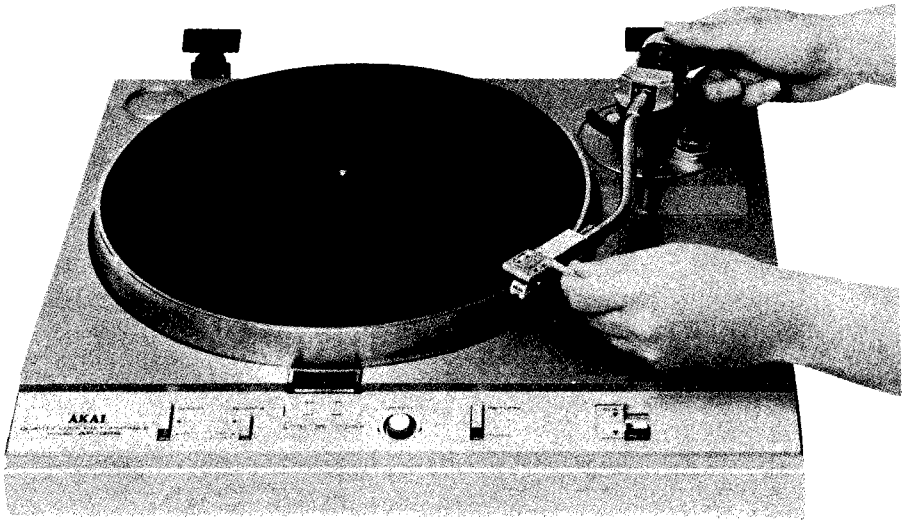

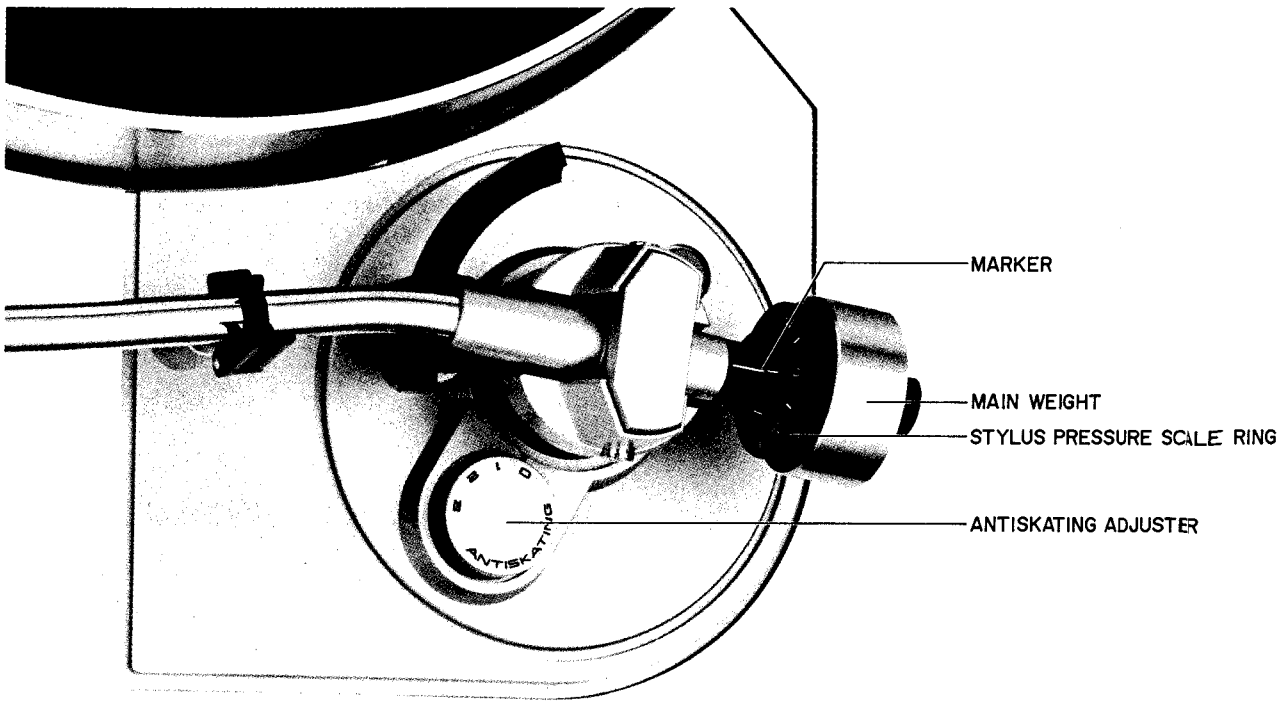

Fig. 6 Stylus Pressure Adjustment

1) Disconnect the Power Cord.
2) Set the Cueing Lever to ▼.
3) Bring the Tone Arm to a position between the turntable and the Tone Arm Rest without touching either.
4) Rotate Main Weight backwards and forwards until the Tone Arm is in perfect horizontal balance. (Zero balance is attained.)

CAUTION: 1. Be sure that Anti-skating Adjuster is set to zero.
2. Remove the stylus guard and be careful nor to damage the stylus.

5) Without moving the Main Weight, turn only the Stylus Pressure Scale Ring to match the "0" mark with the marker on the weight shaft. (Refer to Fig. 6.)
6) Turn Main Weight counter-clockwise (as viewed from the front) with the Stylus Pressure Scale Ring until the marker on the weight shaft corresponds to the desired stylus pressure on the scale.

NOTES: 1. AP-D33, AP-Q55 Black and Silver Panel Models do not come equipped with Cartridges.
2. The recommended stylus pressure for the supplied stylus (AP-D33C, AP-Q55C only), RS-90 is 2 grams. However, in the case of outside interference, more pressure may be needed for stability. The range of adjustment is from 0 to 3 grams.

7) Set the Anti-skating adjuster to correspond with the stylus pressure. (Fine adjust if necessary.)

2. OVERHANG ADJUSTMENT

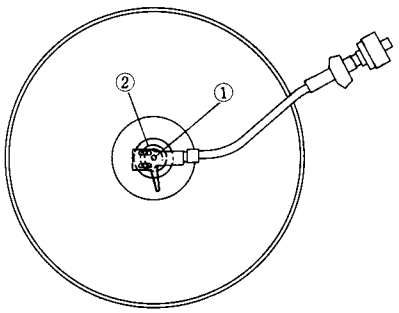

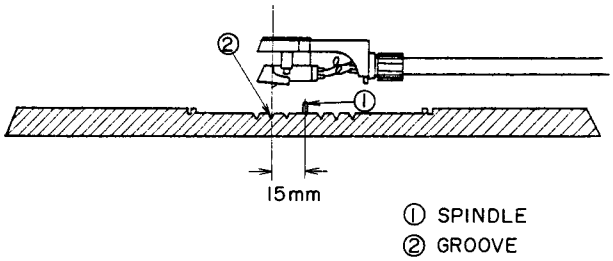

Fig. 7 Overhang Adjustment

The distance from the turntable shaft to the stylus when the Tone Arm is at the center of the turntable is called overhang.
Although overhang is preset at the factory for this model, when the cartridge is replaced, adjustment may be necessary.
For your convenience, the rubber turntable mat has an indicator groove at the center for easy overhang adjustment.
Bring the Tone Arm to the center of the turntable. Adjust the cartridge position in the cartridge shell so that the stylus position is even with the middle groove ring at overhang adjustment position. The cartridge position is adjustable by resetting the screws of the cartridge shell.

3. AUTO-RETURN ADJUSTMENT

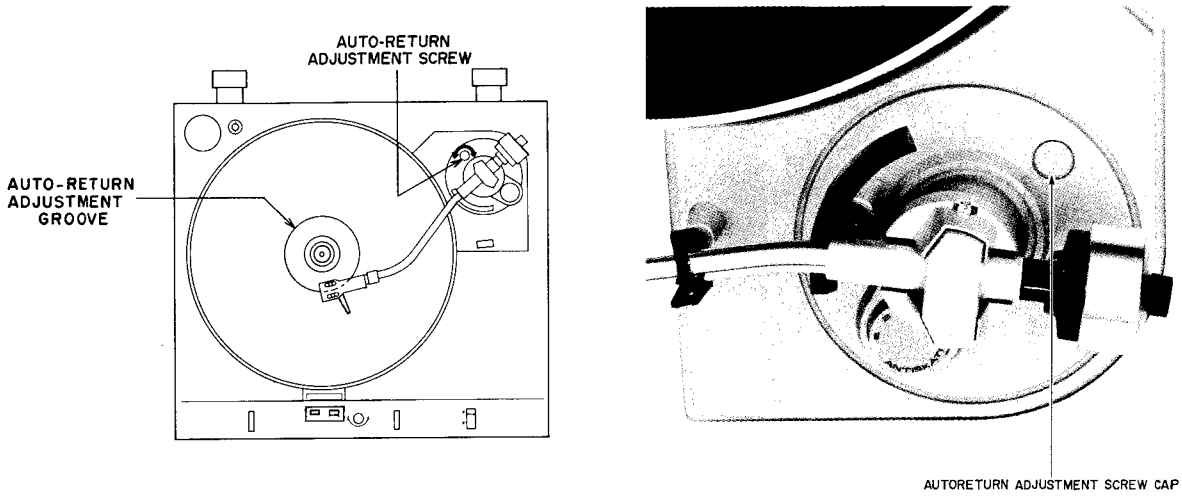

Fig. 8 Auto-Return Adjustment

1) Leave the Power Cord connected for easy conformation of adjustment, and return the Tone Arm to Tone Arm Rest.
2) Remove the Aut-return Adjustment Screw cap.
3) Adjust the Auto-return Adjustment Screw.
4) Put the Tone Arm just over the Groove for Auto-return Adjustment in the rubber mat.
5) Listen for a clicking which indicates that the auto-return adjustment is successful.
   If no clicking is heard, repeat the procedure until it is.

* Turning the screw 90° clockwise moves the position of Stylus approx. 4.5 mm towards the Spindle. Turning 90° counterclockwise moves the position of Stylus approx. 4.5 mm away from the Spindle.

4. ARM LIFTER ADJUSTMENT

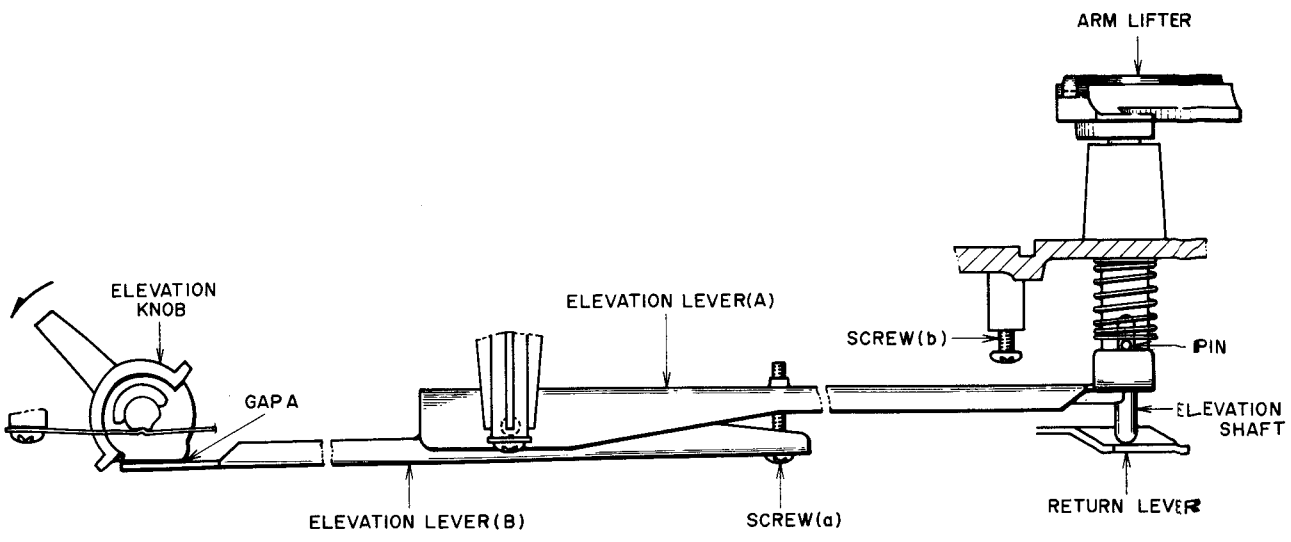

Fig. 9

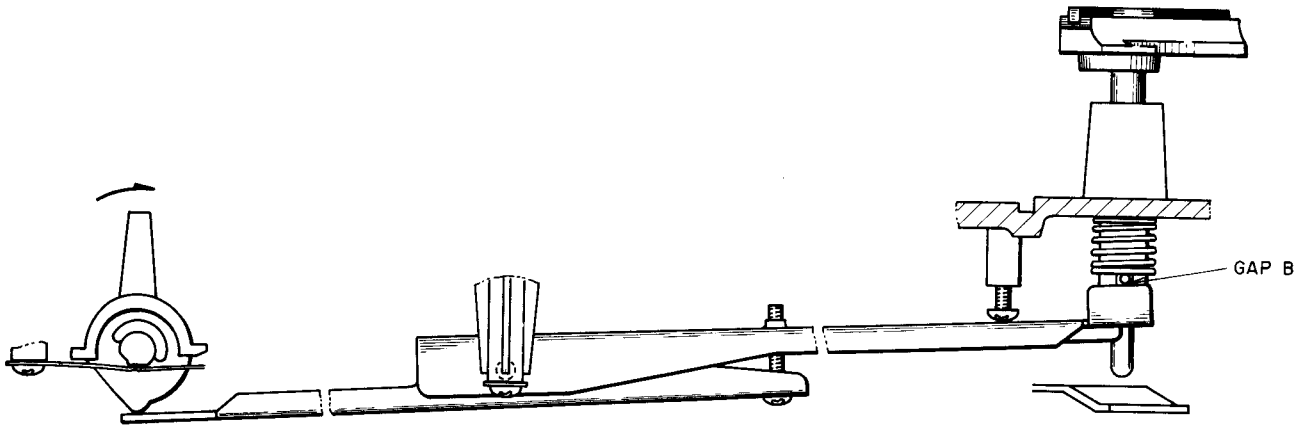

Fig. 10

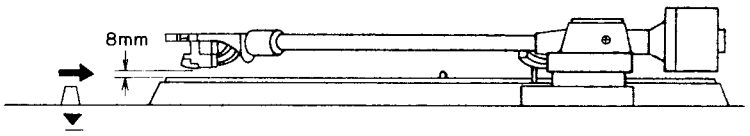

Fig. 11

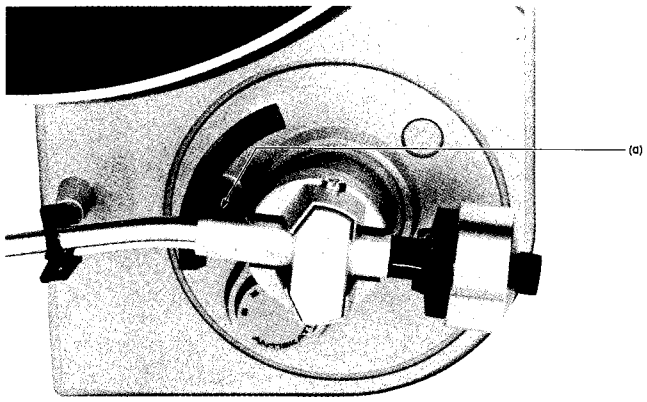

Fig. 12

1) Adjust with the elevation control and the arm lifter should be down. Confirm that the elevation shaft and lifter lever are touching. If not, press the arm lifter down with one finger until they do. Adjust screw (a) at exactly the point where the gap A between the elevation lever (B) and the elevation control disappears. (Refer to Fig. 9.)
2) Next operate the auto return (turn the main gear by hand) and raise the arm lifter. With the elevation control at ▼, adjust screw (b) at exactly the point where the gap (B) between the shaft pin and the elevation lever (A) disappears. (Refer to Fig. 10.)
3) Put a record on and set the elevation control to ▼.
Adjust screw (a) until there is an 8 mm gap between the tip of the stylus and the surface of the record. (Refer to Figs. 11, 12.)

5. RETURN PLUNGER INSTALLATION POSITION ADJUSTMENT

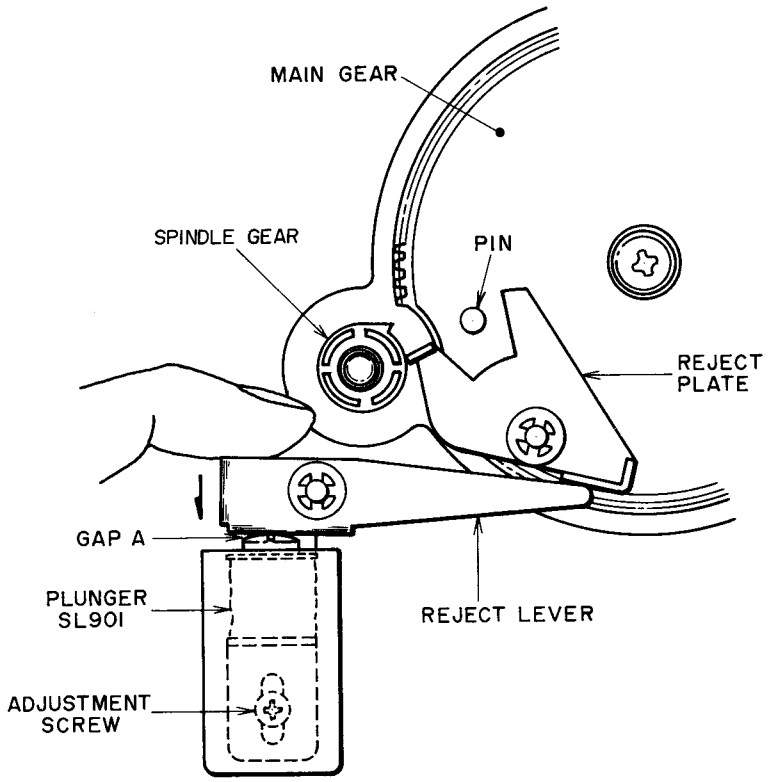

Fig. 13

Press the Reject Lever with your finger until the Reject Plate touches the Spindle Gear when the motor is attached as shown in the illustration. At this time, adjust the position of the Plunger so that the Gap A between the Reject Lever and Plunger disappears.
After adjustment, confirm that the Auto Return operates.

1. MODEL AP-D33/C

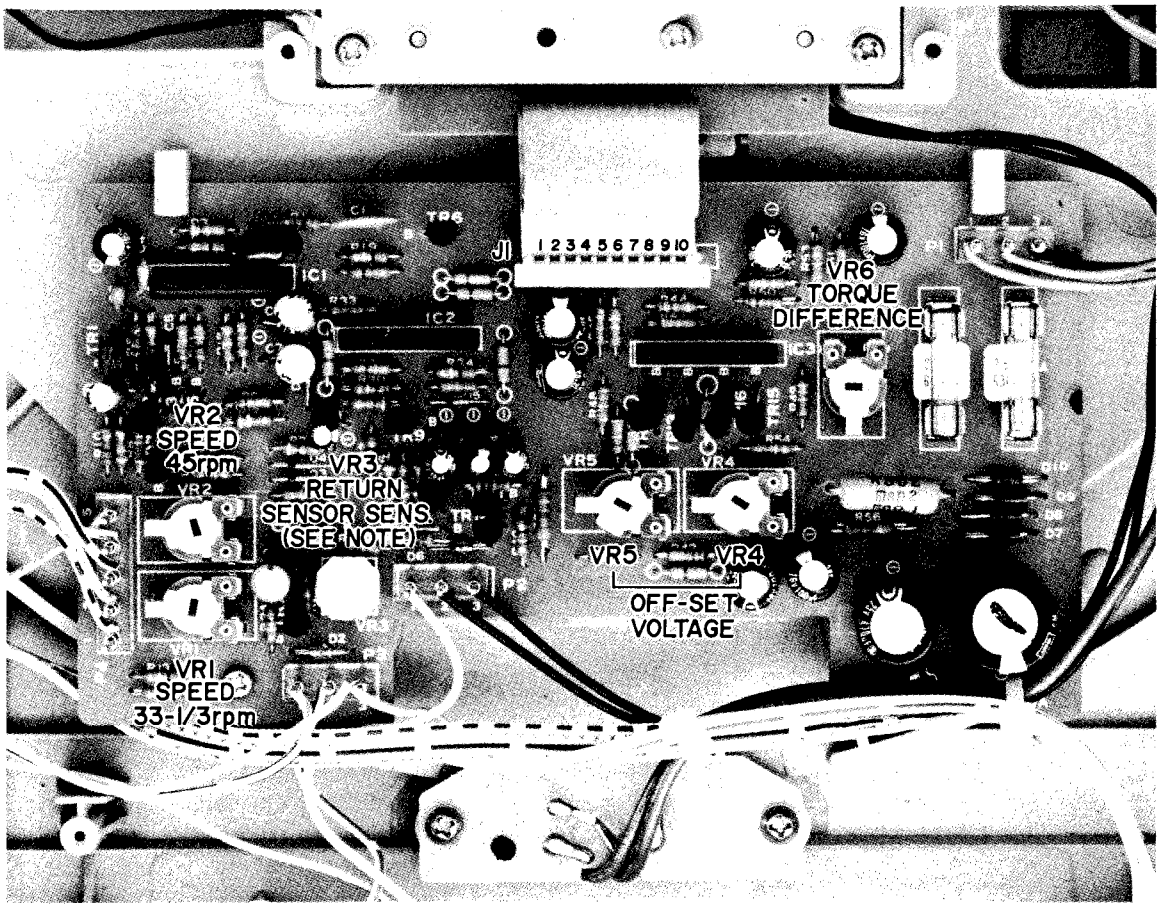

Fig. 14 DD Servo P.C Board APD-3313A

1) Off-set Voltage Adjustment (VR4, VR5) and Torque Difference Adjustment (VR6)

a) Disconnect the motor connection cord.
b) Short connector (J1) pins ③, ④ and ⑧.
c) Set VR6 (300 kB) to the center.
d) Move the Tone Arm and turn on the power.
e) Connect an oscilloscope to terminal ① of connector J1 and adjust VR5 (20 kB) until it reads −100 mV DC.
f) Put the Tone Arm on the Arm Rest.
g) Short connector (J1) pins ⑥, ⑦ and ⑧.
h) Move the Tone Arm and turn on the power.
i) Connect an oscilloscope to terminal ② of connector J1 and adjust VR4 (20 kB) until it reads −100 mV DC.
j) Put the Tone Arm on the Arm Rest and connect the motor connection wire to connector (J1).
k) Move the Tone Arm and turn on the power.
l) Connect an oscilloscope to ① and ② of connector (J1).
Adjust VR6 (300 kB) until the voltage is the same at both ① and ② terminals of connector (J1).

2) Speed Adjustment (VR1 and VR2)

a) Set the Speed Selector to 33-1/3 rpm.
b) Set the Pitch Control Volume to the center.
c) Move the Tone Arm and turn on the power.
d) Adjust VR1 (5 kB) until the strobe comes to a standstill.
e) Set the Speed selector to 45 rpm.
f) Adjust VR2 (5 kB) until the strobe comes to a standstill.

3) Wow and Flutter Confirmation

a) Playback the test record (3,000 Hz).
b) Confirm that the Wow and Flutter is within 0.035% (JIS).
c) If not, re-adjust VR4, VR5 and VR6.

NOTE: Return Sensor Sensitivity Adjustment
Set the Return Sensor Sensitivity Adjustment's Semi-Fixed Volume VR3 to fully clockwise (minimum base voltage of TR7.) In the future, Semi-Fixed Volume VR3 will changed to Fixed Resistor.

2. MODEL AP-Q55/C

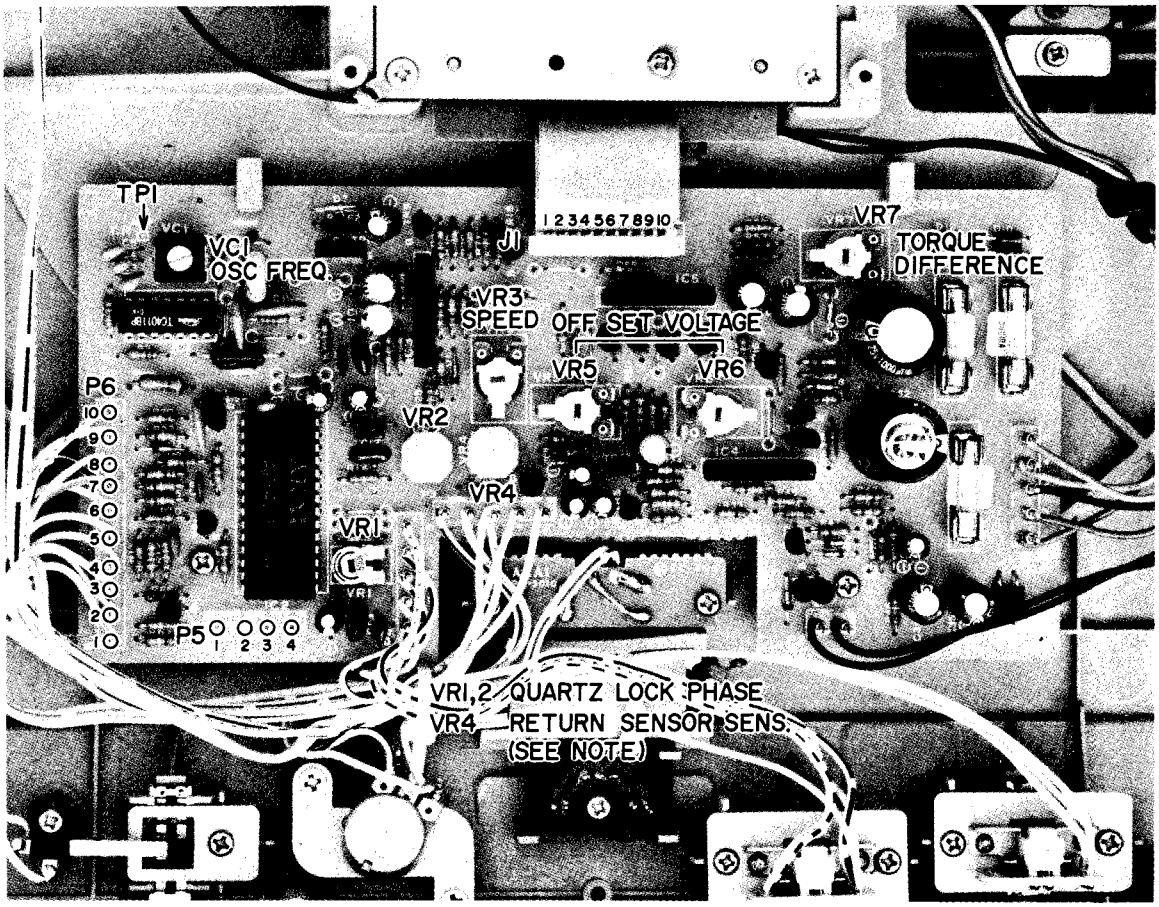

Fig. 15 Quartz Servo P.C Board APQ-5506A

1) X'tal Oscillation Frequency Adjustment (VC1)

a) Connect a frequency counter to TP1 and P6-⑦ (GND).
b) Move the Tone Arm and turn the power on.
c) Adjust VC1 (15P) to give a frequency counter reading of 5.4 MHz ± 10 Hz.

2) Off-set voltage Adjustment (VR5, VR6) and Torque Difference Adjustment (VR7)

a) Disconnect the motor connection wire.
b) Short connector (J1) pins ③, ④ and ⑧.
c) Move the Tone Arm and turn on the power.
d) Connect an oscilloscope to pin ① terminal of connector (J1).
Adjust VR5 (20 kB) until it reads −110 mV DC.
e) Put the Tone Arm on the Arm Rest (Power is OFF).
f) Short connector (J1) pins ⑥, ⑦ and ⑧.
g) Set VR7 (200 kB) to the center.
h) Move the Tone Arm and turn on the power.
i) Connect an oscilloscope to pin ② terminal of connector (J1) and adjust VR6 (20 kB) until it reads −110 mV DC.
j) Put the Tone Arm on the Arm Rest and connect the motor connection wire to the connector (J1).
k) Move the Tone Arm and turn on the power.
l) Connect an oscilloscope to ① and ② of connector (J1).
Adjust VR7 (200 kB) until the voltage is the same at both ① and ② terminals of connector (J1).

3) Speed Adjustment (VR3)

a) Put the Quartz Switch to OFF.
b) Set the Speed Selector to 33-1/3 rpm.
c) Set the Pitch Control Volume to center.
d) Move the Tone Arm and turn the power on.
e) Adjust VR3 (30 kB) until the strobe comes to a standstill.

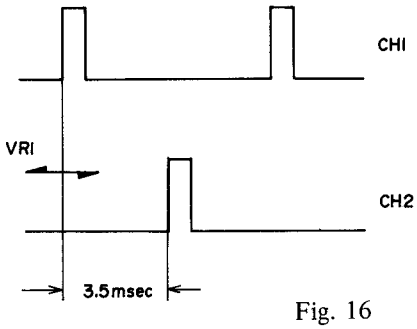

Fig. 16

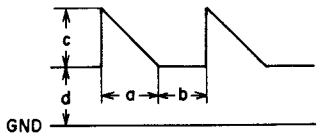

Fig. 17

4) Quartz-Lock Phase Adjustment (VR1 and VR2)

a) Set the Quartz-Lock Switch to ON (LOCK).
b) Set the Speed Selector to 45 rpm position.
c) Move the Tone Arm to make the power ON.
d) Connect the oscilloscope's CH-1 to P5-② and CH-2 to P5-③.
e) Set the VR1 (500 kB) to mechanical center.
f) Adjust the VR2 (20 kB) so that the phase different between CH-1 and CH-2 is 3.5 msec as shown in Fig. 16.
g) Connect the oscilloscope to P5-④.
h) Adjust VR1 (500 kB) and VR2 (20 kB) so that the a=b and c=d as shown in Fig. 17.

5) Wow and Flutter Confirmation

a) Put the Quartz Switch to OFF.
b) Playback the test record (3,000 Hz).
c) Check that the Wow and Flutter is to within 0.035% (JIS).
e) If not, re-adjust VR5, VR6 and VR7.

NOTE: Return Sensor Sensitivity Adjustment
Set the Return Sensor Sensitivity Adjustment's Semi-Fixed Volume VR4 to fully clockwise (minimum base voltage of TR8). In the future, Semi-Fixed Volume VR4 will changed to Fixed Resistor.

VIII. CLASSIFICATION OF VARIOUS P.C BOARDS

1. P.C BOARD TITLES AND IDENTIFICATION NUMBERS

1) Model AP-D33/C

P.C Board Title	P.C Board Number	Notes
Fuse (A) P.C Board	APD-3052	U/T
Fuse (B) P.C Board	APD-3062	AAL, CSA
Fuse (C) P.C Board	APD-3063	CEE, SAA, UK
Fuse (D) P.C Board	APD-3319	JPN
Cds P.C Board	APD-3097A	
LED P.C Board	APD-3097B	
Neon Lamp P.C Board	APD-3056	
DD Servo P.C Board	APD-3313A	
Push Switch P.C Board	APD-3313B	
Intermediate P.C Board	APD-3318	

2) Model AP-Q55/C

P.C Board Title	P.C Board Number	Notes
Cds P.C Board	APD-3097A	
LED P.C Board	APD-3097B	
Fuse (A) P.C Board	APD-3052	U/T
Fuse (B) P.C Board	APQ-5014	AAL
Fuse (C) P.C Board	APQ-5016	CSA
Fuse (D) P.C Board	APQ-5017	CEE, SAA, UK
Fuse (E) P.C Board	APD-3319	JPN
Intermediate P.C Board	APD-3318	
Neon Lamp P.C Board	APQ-5010	
FG Sensor (B) P.C Board	APQ-5037	
Quartz Servo P.C Board	APQ-5506A	
Push Switch (A) P.C Board	APQ-5506B	
Push Switch (B) P.C Board	APQ-5506C	
LED (B) P.C Boad	APQ-5506D	

2. MODEL AP-D33/C COMPOSITION OF VARIOUS P.C BOARDS

1) DD SERVO P.C BOARD APD-3313A, PUSH SWITCH P.C BOARD APD-3313B, CDS P.C BOARD APD-3097A and LED P.C BOARD APD-3097B

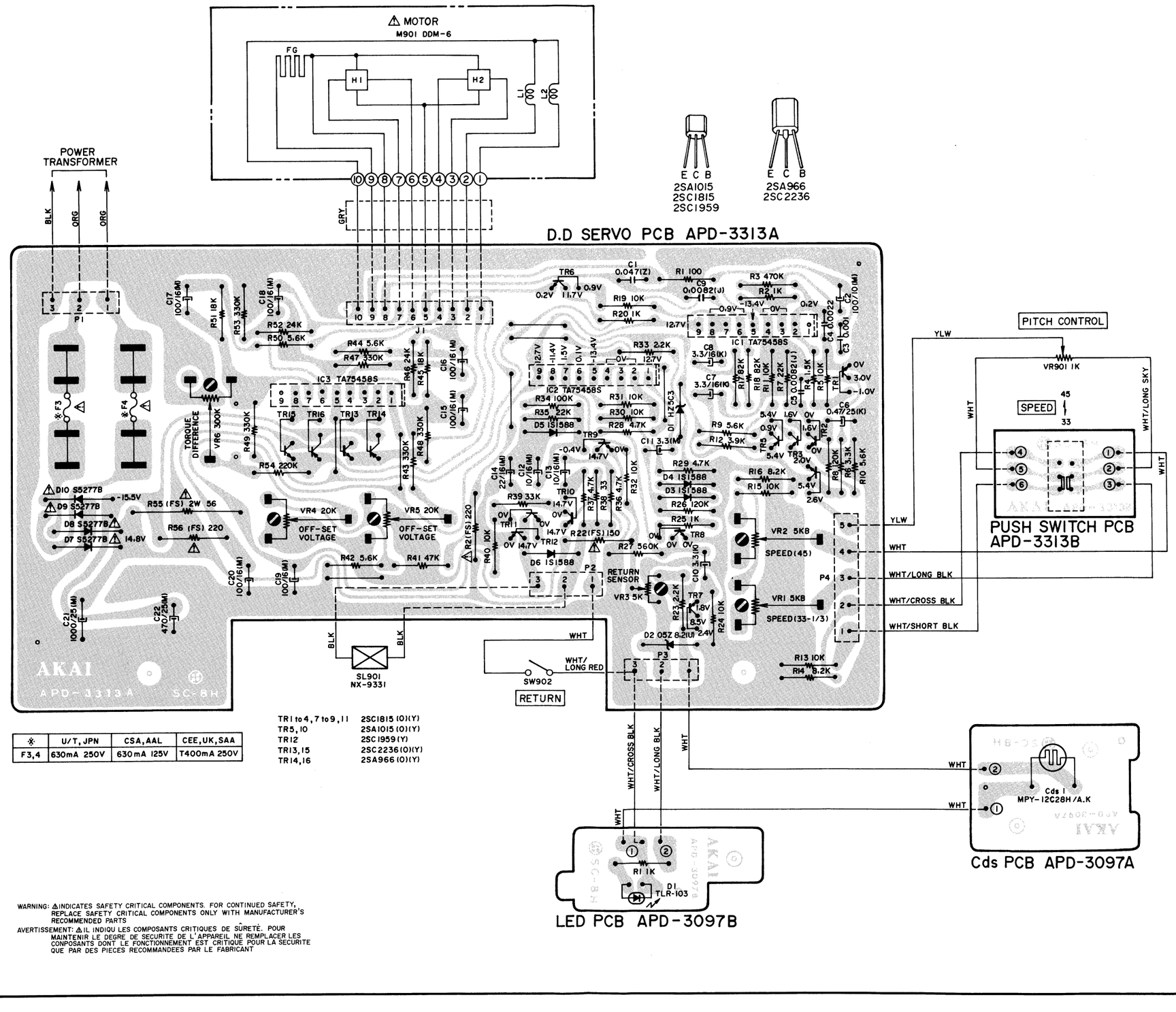

※	U/T, JPN	CSA, AAL	CEE, UK, SAA
F3,4	630mA 250V	630mA 125V	T400mA 250V

TR1 to 4, 7 to 9, 11	2SC1815 (O)(Y)
TR5, 10	2SA1015 (O)(Y)
TR12	2SC1959 (Y)
TR13, 15	2SC2236 (O)(Y)
TR14, 16	2SA966 (O)(Y)

WARNING: ⚠INDICATES SAFETY CRITICAL COMPONENTS. FOR CONTINUED SAFETY, REPLACE SAFETY CRITICAL COMPONENTS ONLY WITH MANUFACTURER'S RECOMMENDED PARTS

AVERTISSEMENT: ⚠IL INDIQU LES COMPOSANTS CRITIQUES DE SÛRETÉ. POUR MAINTENIR LE DEGRE DE SECURITE DE L'APPAREIL NE REMPLACER LES CONPOSANTS DONT LE FONCTIONNEMENT EST CRITIQUE POUR LA SECURITE QUE PAR DES PIECES RECOMMANDEES PAR LE FABRICANT

2) INTERMEDIATE P.C BOARD APD-3318

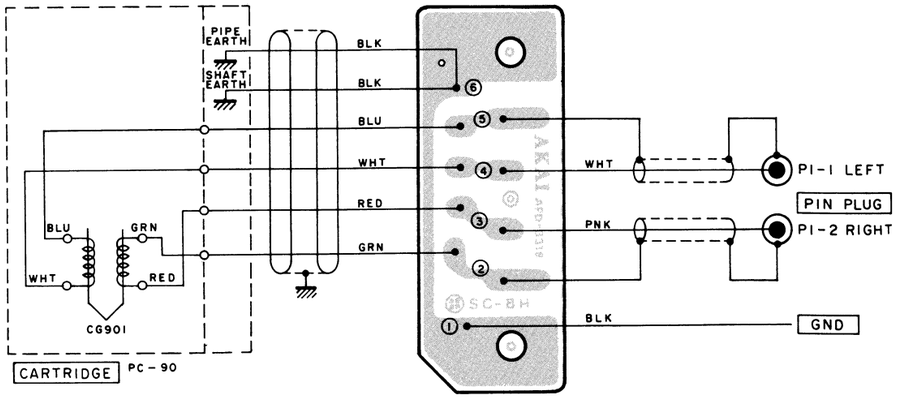

3) FUSE P.C BOARD (A) APD-3052 and NEON LAMP P.C BOARD APD-3056 (U/T)

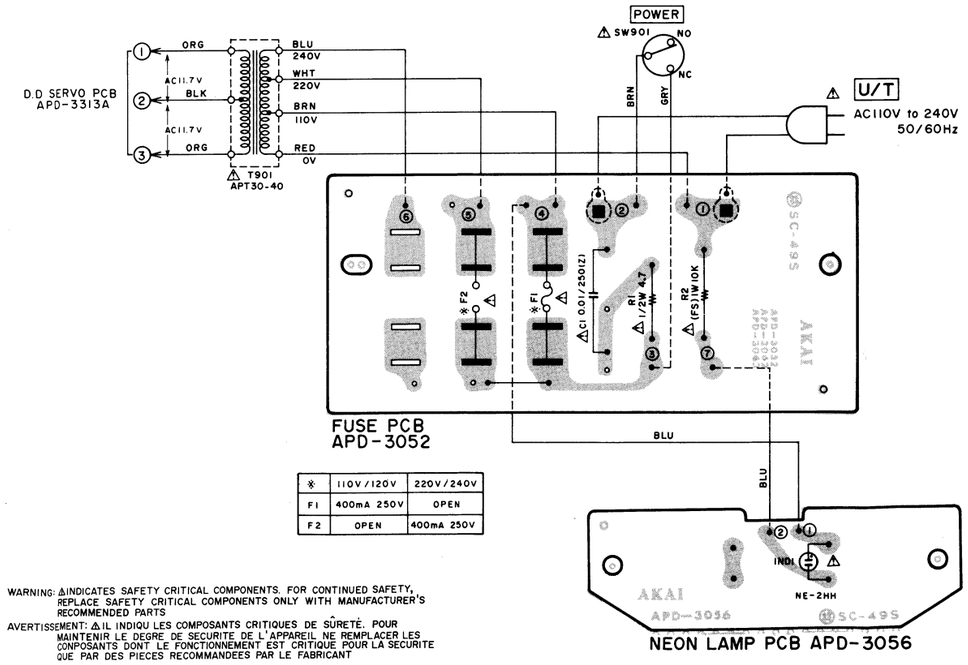

*	110V/120V	220V/240V
F1	400mA 250V	OPEN
F2	OPEN	400mA 250V

WARNING: ⚠INDICATES SAFETY CRITICAL COMPONENTS. FOR CONTINUED SAFETY, REPLACE SAFETY CRITICAL COMPONENTS ONLY WITH MANUFACTURER'S RECOMMENDED PARTS

AVERTISSEMENT: ⚠IL INDIQU LES COMPOSANTS CRITIQUES DE SÛRETÉ. POUR MAINTENIR LE DEGRE DE SECURITE DE L'APPAREIL NE REMPLACER LES CONPOSANTS DONT LE FONCTIONNEMENT EST CRITIQUE POUR LA SECURITE QUE PAR DES PIECES RECOMMANDEES PAR LE FABRICANT

4) FUSE P.C BOARD (B) APD-3062 and NEON LAMP P.C BOARD APD-3056 (AAL, CSA)

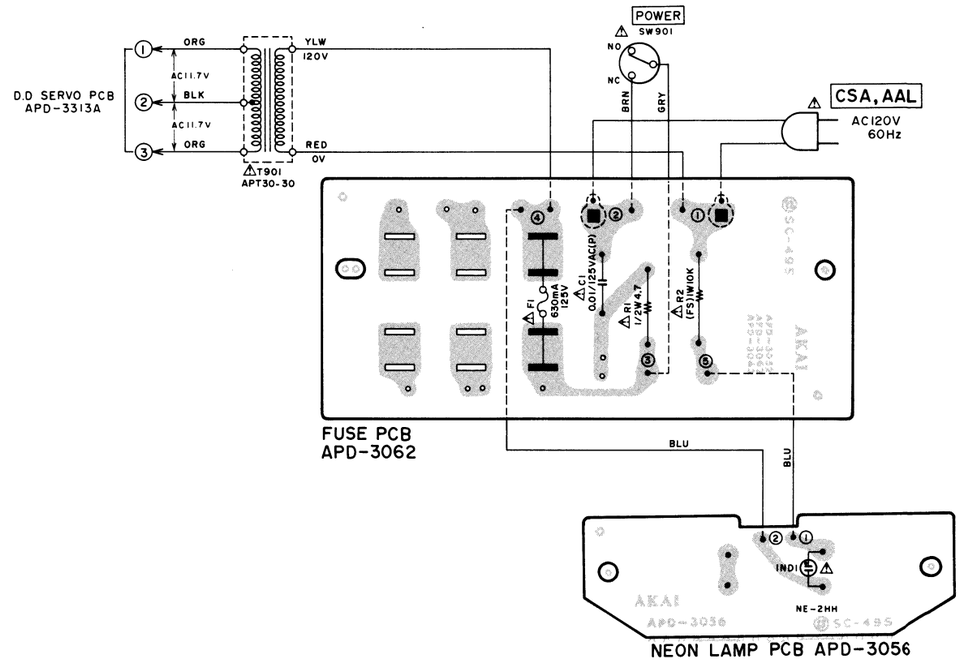

5) FUSE P.C BOARD (C) APD-3063 and NEON LAMP P.C BOARD APD-3056 (CEE, SAA, UK)

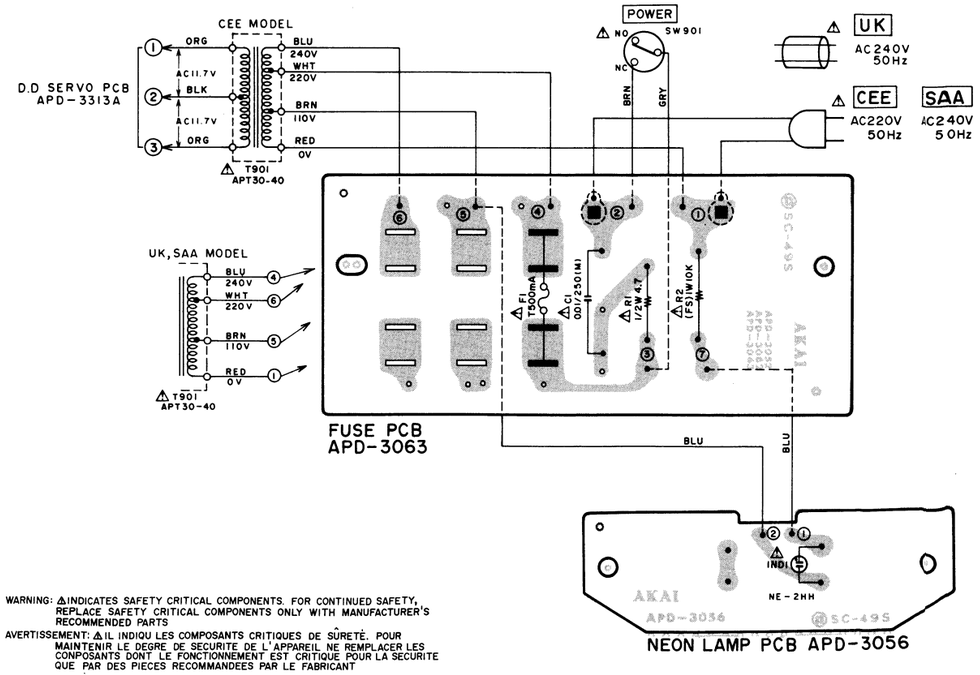

WARNING: ⚠INDICATES SAFETY CRITICAL COMPONENTS. FOR CONTINUED SAFETY, REPLACE SAFETY CRITICAL COMPONENTS ONLY WITH MANUFACTURER'S RECOMMENDED PARTS

AVERTISSEMENT: ⚠IL INDIQU LES COMPOSANTS CRITIQUES DE SÛRETÉ. POUR MAINTENIR LE DEGRE DE SECURITE DE L'APPAREIL NE REMPLACER LES CONPOSANTS DONT LE FONCTIONNEMENT EST CRITIQUE POUR LA SECURITE QUE PAR DES PIECES RECOMMANDEES PAR LE FABRICANT

6) FUSE P.C BOARD (D) APD-3319 and NEON LAMP P.C BOARD APD-3056 (JPN)

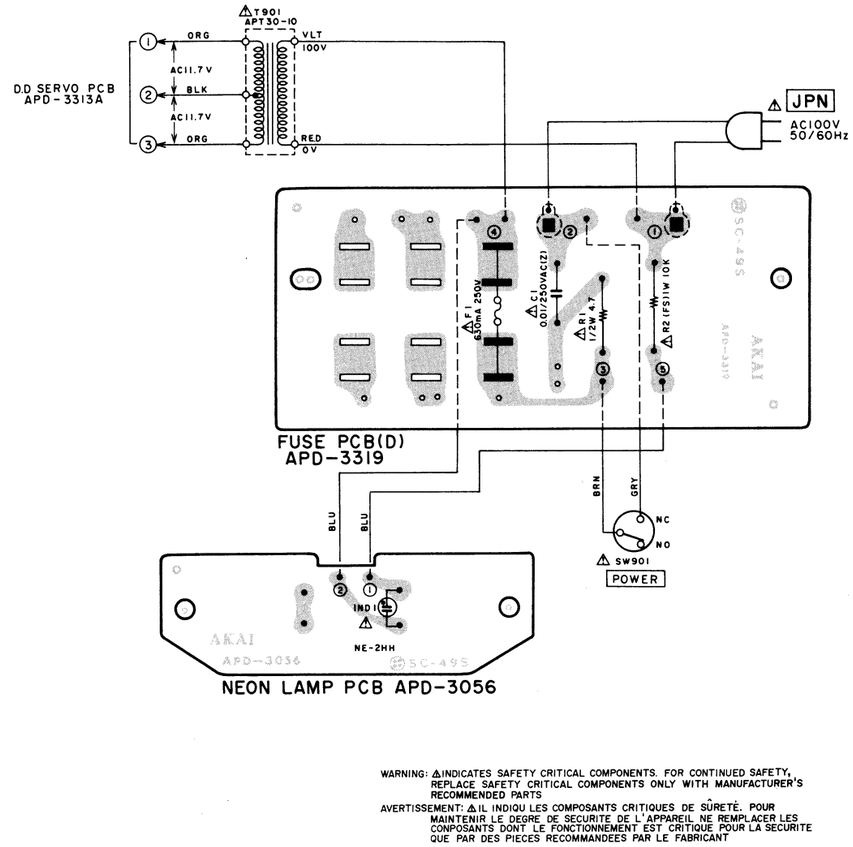

WARNING: ⚠INDICATES SAFETY CRITICAL COMPONENTS. FOR CONTINUED SAFETY, REPLACE SAFETY CRITICAL COMPONENTS ONLY WITH MANUFACTURER'S RECOMMENDED PARTS

AVERTISSEMENT: ⚠ IL INDIQU LES COMPOSANTS CRITIQUES DE SÛRETÉ. POUR MAINTENIR LE DEGRE DE SECURITE DE L'APPAREIL NE REMPLACER LES COMPOSANTS DONT LE FONCTIONNEMENT EST CRITIQUE POUR LA SECURITE QUE PAR DES PIECES RECOMMANDEES PAR LE FABRICANT

3. MODEL AP-Q55/C COMPOSITION OF VARIOUS P.C BOARDS

1) QUARTZ SERVO P.C BOARD APQ-5506A, PUSH SWITCH (A) P.C BOARD APQ-5506B, PUSH SWITCH (B) P.C BOARD APQ-5506C, LED (B) P.C BOARD APQ-5506D, NEON LAMP P.C BOARD APQ-5010, CDS P.C BOARD APD-3097A, LED P.C BOARD APD-3097B and FG SENSOR (B) P.C BOARD APQ-3057

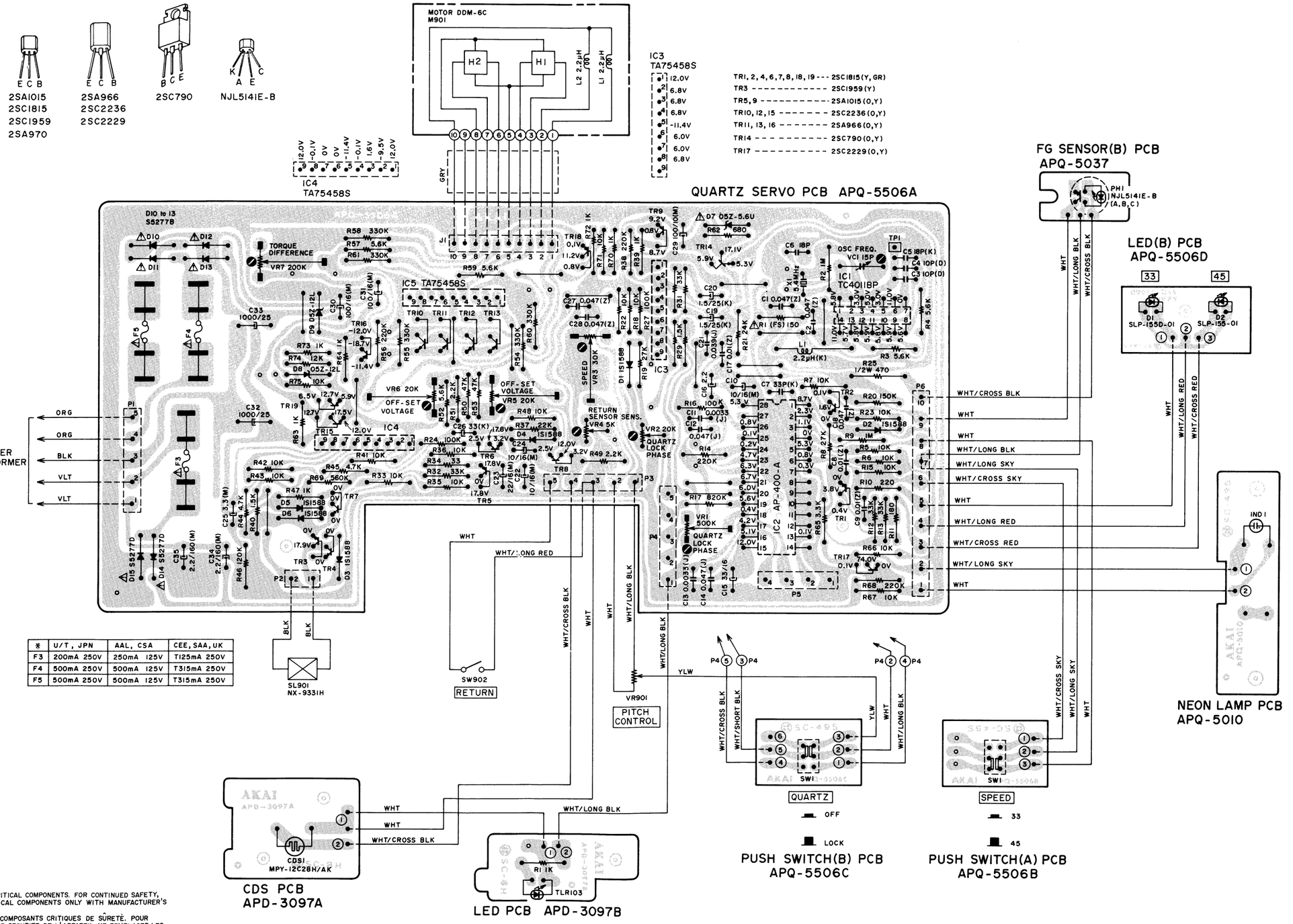

*	U/T, JPN	AAL, CSA	CEE, SAA, UK
F3	200mA 250V	250mA 125V	T125mA 250V
F4	500mA 250V	500mA 125V	T315mA 250V
F5	500mA 250V	500mA 125V	T315mA 250V

WARNING: ⚠ INDICATES SAFETY CRITICAL COMPONENTS. FOR CONTINUED SAFETY, REPLACE SAFETY CRITICAL COMPONENTS ONLY WITH MANUFACTURER'S RECOMMENDED PARTS

AVERTISSEMENT: ⚠ IL INDIQU LES COMPOSANTS CRITIQUES DE SÛRETÉ. POUR MAINTENIR LE DEGRÉ DE SECURITE DE L'APPAREIL, NE REMPLACER LES COMPOSANTS DONT LE FONCTIONNEMENT EST CRITIQUE POUR LA SECURITE QUE PAR DES PIECES RECOMMANDEES PAR LE FABRICANT

2) INTERMEDIATE P.C BOARD APD-3318

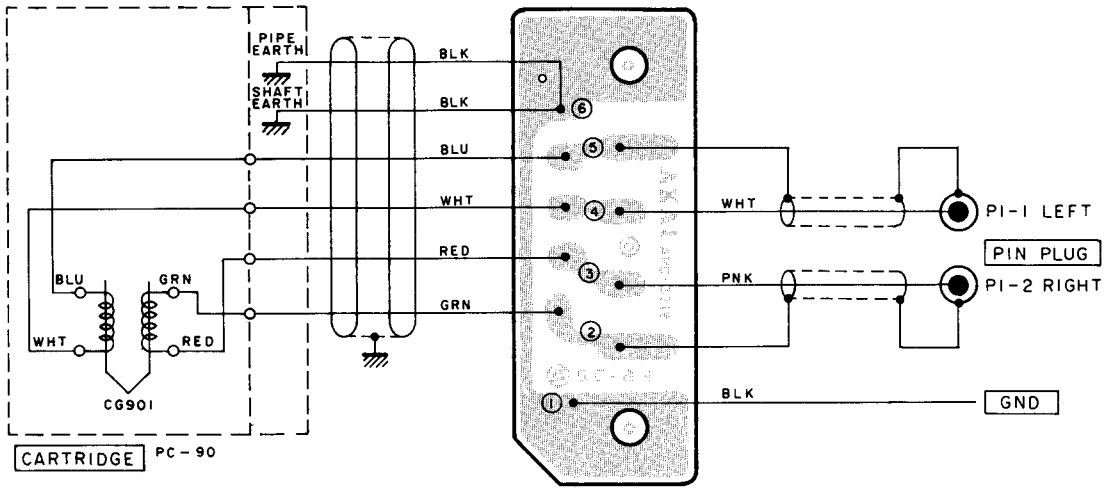

3) FUSE (A) P.C BOARD APD-3052 (U/T)

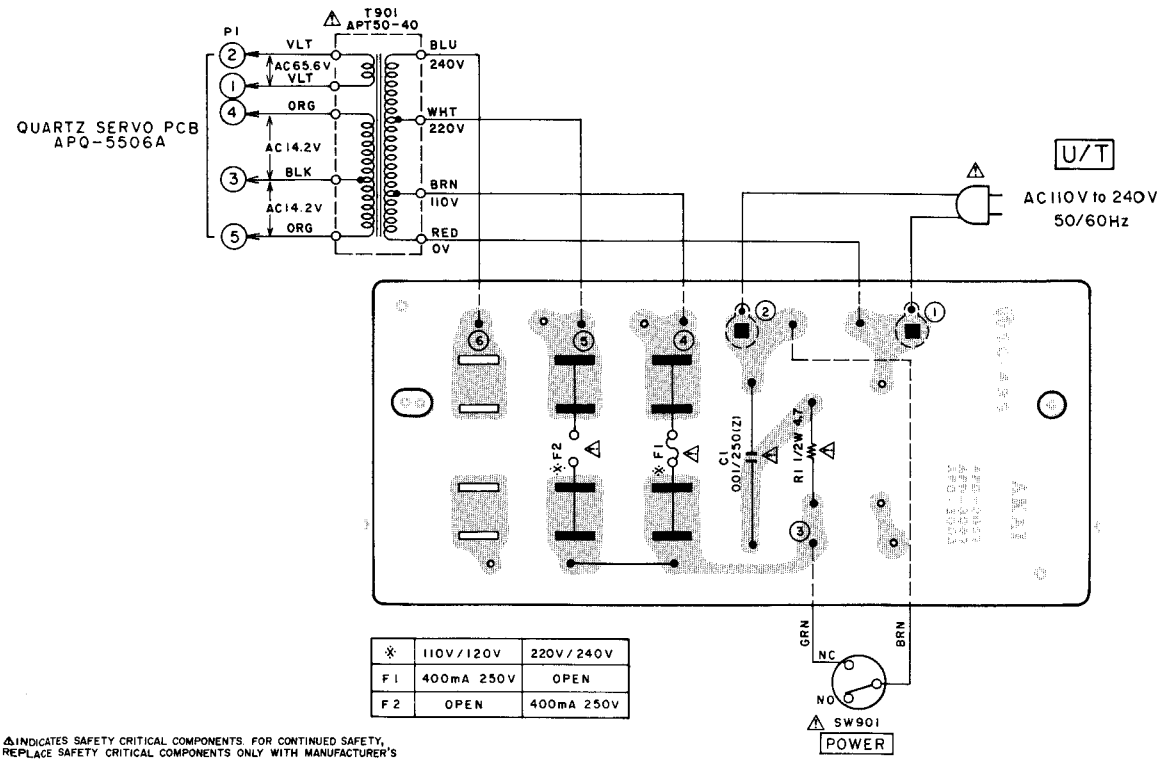

※	110V/120V	220V/240V
F1	400mA 250V	OPEN
F2	OPEN	400mA 250V

WARNING: ⚠INDICATES SAFETY CRITICAL COMPONENTS. FOR CONTINUED SAFETY, REPLACE SAFETY CRITICAL COMPONENTS ONLY WITH MANUFACTURER'S RECOMMENDED PARTS

AVERTISSEMENT: ⚠IL INDIQU LES COMPOSANTS CRITIQUES DE SÛRETÉ. POUR MAINTENIR LE DEGRE DE SECURITE DE L'APPAREIL NE REMPLACER LES CONPOSANTS DONT LE FONCTIONNEMENT EST CRITIQUE POUR LA SECURITE QUE PAR DES PIECES RECOMMANDEES PAR LE FABRICANT

4) FUSE (B), (C) P.C BOARD APQ-5014 (AAL), APQ-5016 (CSA)

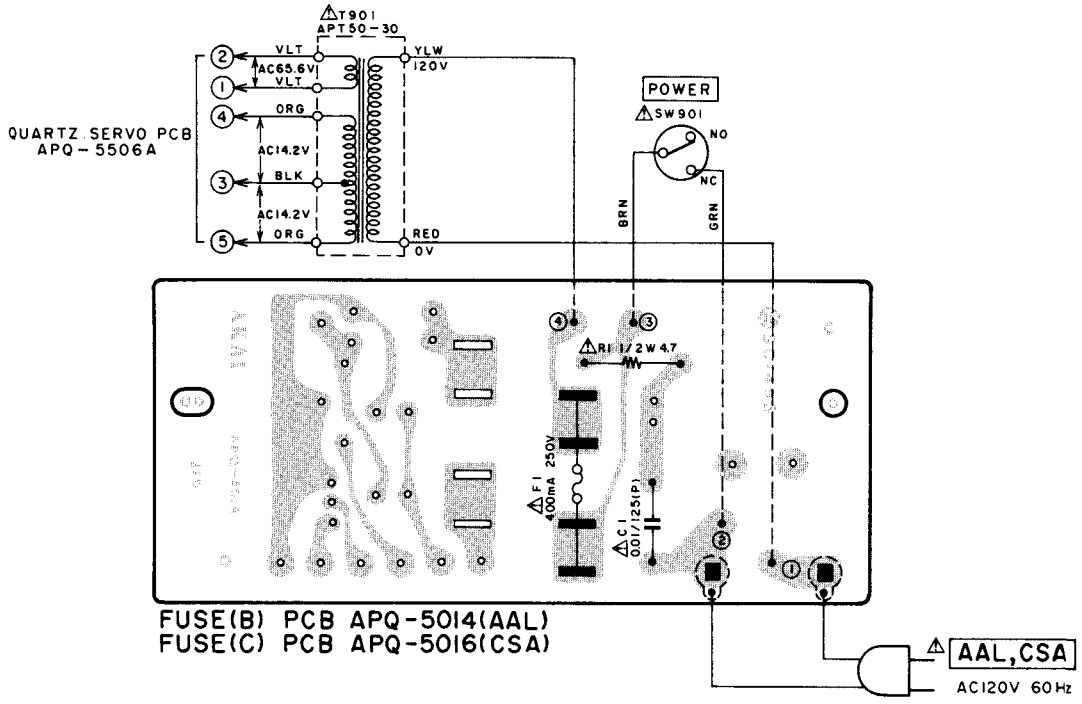

5) FUSE (D) P.C BOARD APQ-5017 (CEE, SAA, UK)

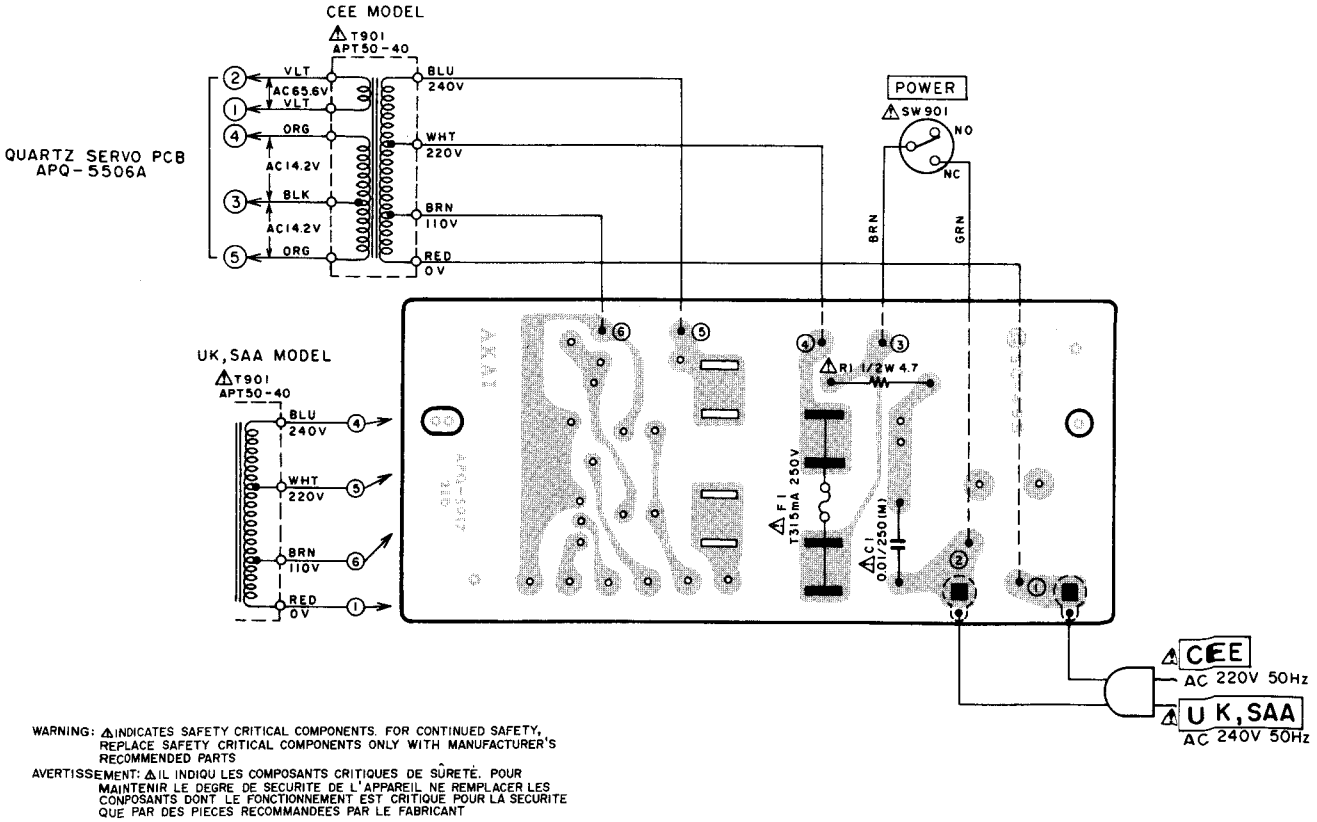

WARNING: ⚠INDICATES SAFETY CRITICAL COMPONENTS. FOR CONTINUED SAFETY, REPLACE SAFETY CRITICAL COMPONENTS ONLY WITH MANUFACTURER'S RECOMMENDED PARTS

AVERTISSEMENT: ⚠IL INDIQU LES COMPOSANTS CRITIQUES DE SÛRETÉ. POUR MAINTENIR LE DEGRE DE SECURITE DE L'APPAREIL NE REMPLACER LES CONPOSANTS DONT LE FONCTIONNEMENT EST CRITIQUE POUR LA SECURITE QUE PAR DES PIECES RECOMMANDEES PAR LE FABRICANT

6) FUSE (E) P.C BOARD APD-3319 (JPN)

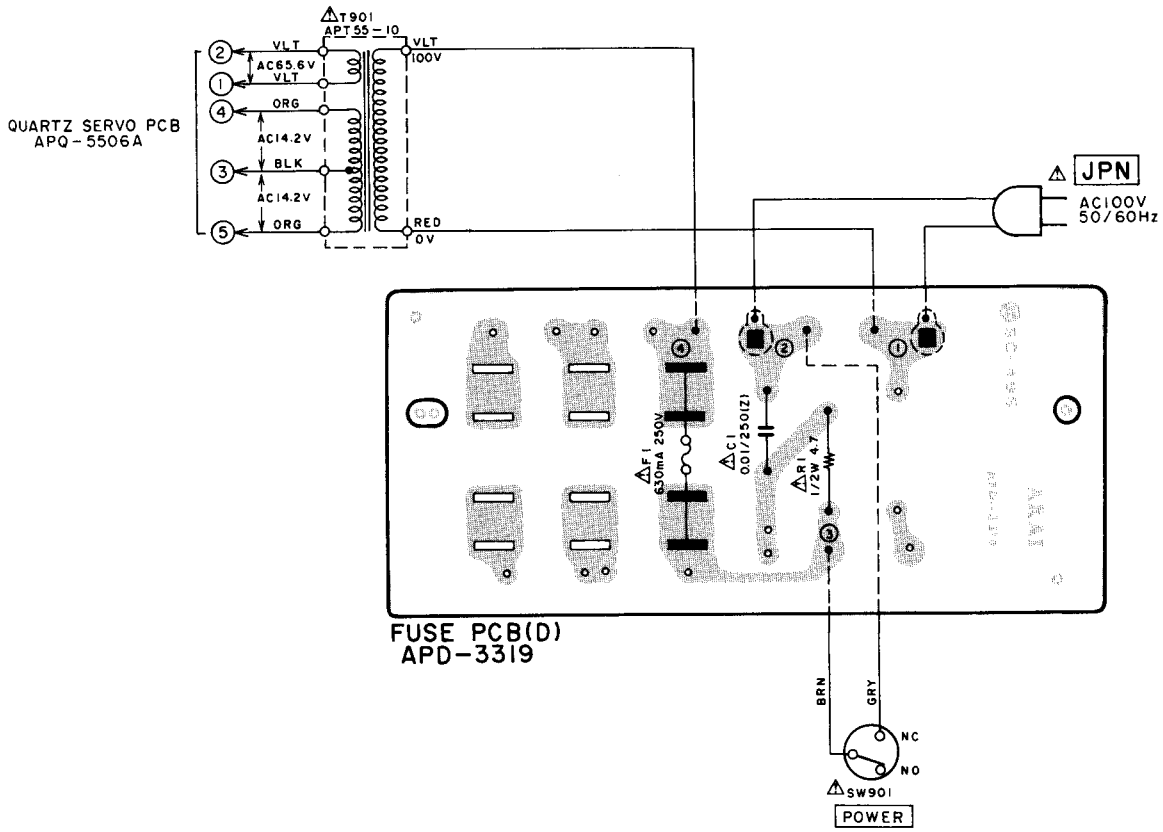

WARNING: ⚠INDICATES SAFETY CRITICAL COMPONENTS. FOR CONTINUED SAFETY, REPLACE SAFETY CRITICAL COMPONENTS ONLY WITH MANUFACTURER'S RECOMMENDED PARTS

AVERTISSEMENT: ⚠IL INDIQU LES COMPOSANTS CRITIQUES DE SÛRETÉ. POUR MAINTENIR LE DEGRE DE SECURITE DE L'APPAREIL NE REMPLACER LES CONPOSANTS DONT LE FONCTIONNEMENT EST CRITIQUE POUR LA SECURITE QUE PAR DES PIECES RECOMMANDEES PAR LE FABRICANT

SECTION 3

PARTS LIST

TABLE OF CONTENTS

I. MODEL AP-B21/C
1. ASSEMBLY BLOCK 40

II. MODEL AP-D33/C
1. D.D SERVO P.C BOARD (APD-3313A) BLOCK 42
2. FUSE P.C BOARD (APD-3052/3062/3063/3319) BLOCK 42
3. ASSEMBLY BLOCK (1) 43
4. ASSEMBLY BLOCK (2) 44
5. FINAL ASSEMBLY BLOCK 46

III. MODEL AP-Q55/C
1. QUARTZ SERVO P.C BOARD (APQ-5506A) BLOCK 47
2. FUSE P.C BOARD
(APD-3052/APQ-5014/APQ-5016/APQ-5017) BLOCK . . . 47
3. ASSEMBLY BLOCK (1) 48
4. ASSEMBLY BLOCK (2) 50
5. FINAL ASSEMBLY BLOCK 52

INDEX
1. MODEL AP-B21/C 53
2. MODEL AP-D33/C 53
3. MODEL AP-Q55/C 54

Resistor and Capacitor which is not listed in this parts list, please refer to COMMON LIST FOR SERVICE PARTS.

HOW TO USE THIS PARTS LIST

1. This parts list is compiled by various individual blocks based on assembly process.
2. When ordering parts, please describe parts number, serial number, and model number in detail.
3. How to read List

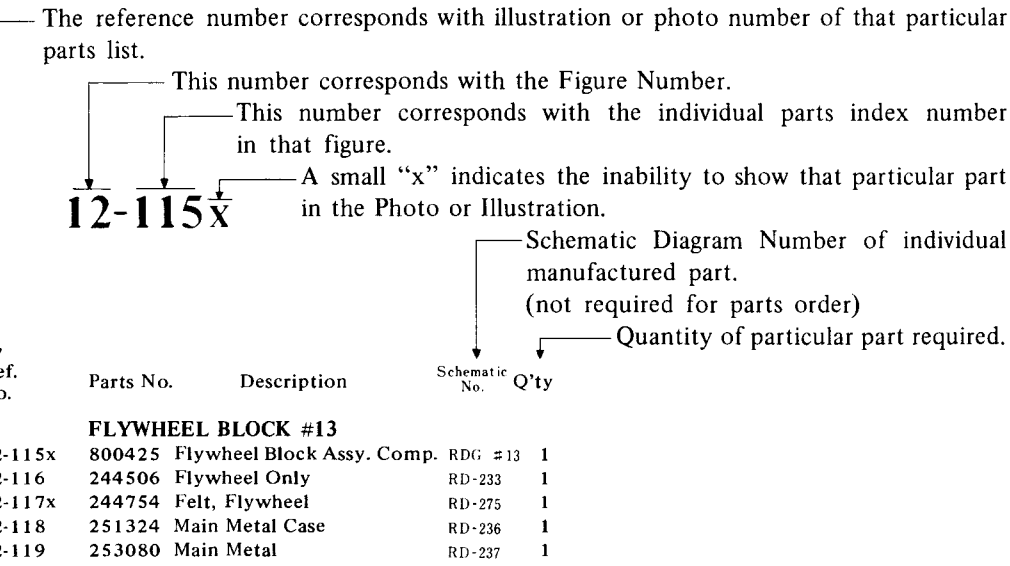

Ref. No.	Parts No.	Description	Schematic No.	Q'ty
		FLYWHEEL BLOCK #13		
12-115x	800425	Flywheel Block Assy. Comp.	RDG #13	1
12-116	244506	Flywheel Only	RD-233	1
12-117x	244754	Felt, Flywheel	RD-275	1
12-118	251324	Main Metal Case	RD-236	1
12-119	253080	Main Metal	RD-237	1

4. The symbol numbers shown on the P.C. Board list can be matched with the Composite Views of Components of the Schematic Diagram or Service Manual.
5. Please utilize separate "Common List for Service Parts" for Resistor Parts orders.
6. The shape of the parts and parts name, etc. can be confirmed by comparing them with the parts shown on the Electrical Parts Table of P.C. Board.
7. Both the kind of part and installation position can be determined by the Parts Number. To determine where a parts number is listed, utilize Parts Index at end of Parts List.
   It is necessary first of all to find the Parts Number. This can be accomplished by using the Reference Number listed at right of parts number in the Parts Index. (meaning of ref. no. outlined in Item 3 above).
8. Utilize separate "Price List for Parts" to determine unit price. The most simple method of finding parts Price is to utilize the reference number.

CAUTION:
1. When placing an order for parts, be sure to list the parts no. model no., and description. There are instances in which if any of this information is omitted, parts cannot be shipped or the wrong parts will be delivered.
2. Please be careful not to make a mistake in the parts no. If the parts no. is in error, a part different from the one ordered may be delivered.
3. Because parts number and parts unit supply in the Preliminary Service Manual (Basic Parts List) may be partially changed, please use this parts list for all future reference.

WARNING: ⚠ INDICATES SAFETY CRITICAL COMPONENTS. FOR CONTINUED SAFETY, REPLACE SAFETY CRITICAL COMPONENTS ONLY WITH MANUFACTURER'S RECOMMENDED PARTS.

AVERTISSEMENT: ⚠ IL INDIQU LES COMPOSANTS CRITIQUES DE SURETE. POUR MAINTENIR LE DEGRE DE SECURITE DE L'APPAREIL NE REMPLACER LES COMPOSANTS DONT LE FONCTIONNEMENT EST CRITIQUE POUR LA SECURITE QUE PAR DES PIECES RECOMMANDEES PAR LE FABRICANT.

AC INLET SYSTEM

This model is equipped with an AC INLET SYSTEM. Please refer to the AC INLET SYSTEM CHART below for the specific type. By the AC INLET SYSTEM, AC (mains) cord can be connected to and disconnected from the model because the model is provided with socket exclusively for AC (mains) cord on its main body.
Please note, however, that certain models are not equipped with this system and has a built-in AC (mains) cord as before.

AC INLET SYSTEM CHART

CLASS I

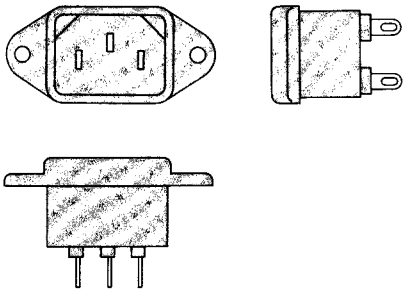

Picture 1
AC INLET to be installed on machines

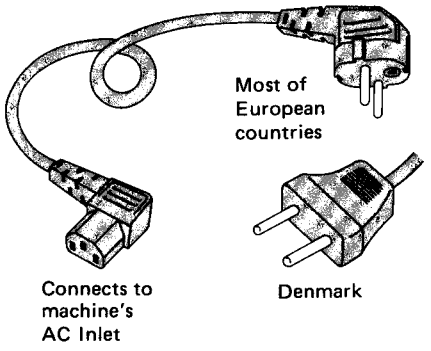

Picture 2
AC (mains) cord

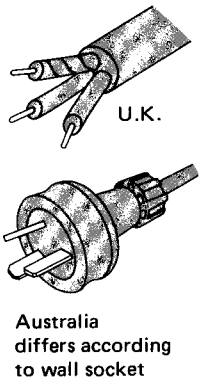

CLASS II

▣ This mark indicating double insulation will be attached to machine's rear panel

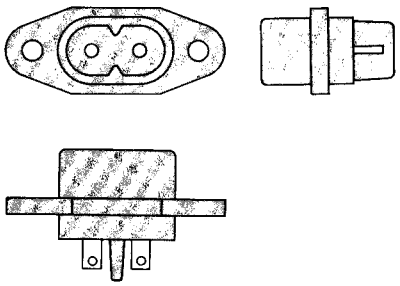

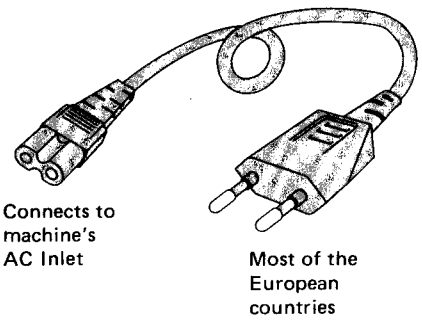

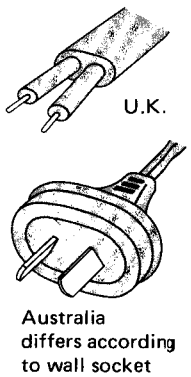

Parts List for AC (mains) Cord Set

Standard		Description	Type of AC Inlet	Parts No.
Class I	CEE	Cord Set CEE (3 cores)	3P	EW302993
	UK	Cord Set UK (3 cores)	3P	EW302994
	SAA	Cord Set SAA (3 cores)	3P	EW302996
	U/T	Cord Set U/T (3 cores)	3P	EW302646
Class II	CEE	Cord Set CEE (2 cores)	2P	EW638144
	UK	Cord Set UK (2 cores)	2P	EW302995
	SAA	Cord Set SAA (2 cores)	2P	EW302991
	U/T	Cord Set U/T (2 cores)	2P	EW302899

I. MODEL AP-B21/C

1. ASSEMBLY BLOCK

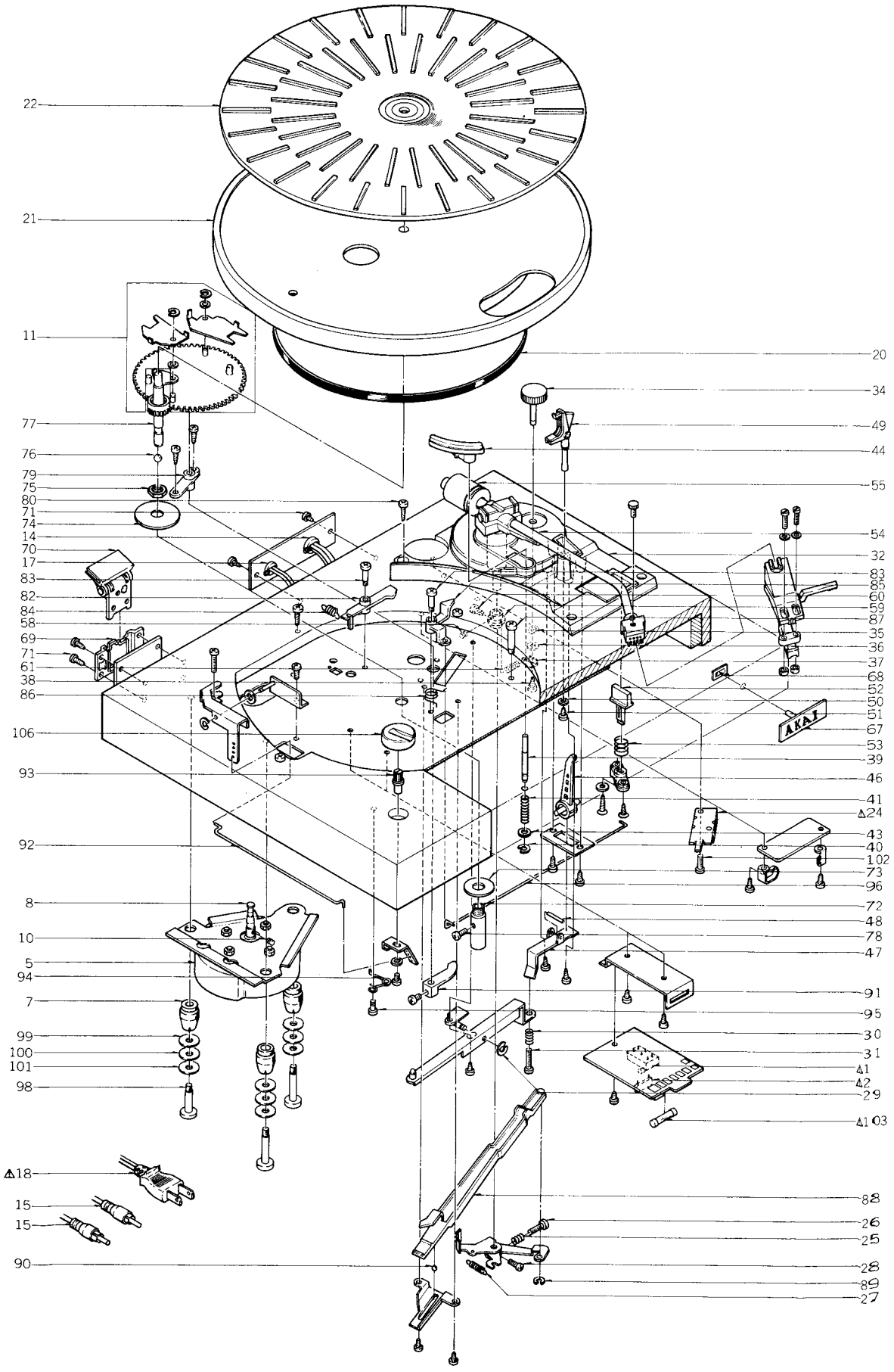

ASSEMBLY BLOCK

REF. NO.	PARTS NO.	DESCRIPTION
1-1	ES315513	⚠ SW SLIDE 22513 02-2 (U)
1-2	EC302898	⚠ C MMY V MDD 473K 630DC (U)
1-3x	EC314688	⚠ C CE V FZ 103P 125AC (C,A)
1-4x	EC308528	⚠ C OIL H ECN-C 473M 450AC (E,B,S)
1-5	BMP1002A050A	⚠ MOTOR BLK AP-B20 (U) (U,A,E,B,S)
1-6x	BMP1002A060A	⚠ MOTOR BLK AP-B20 (C) (C)
1-7	SZ302793	CUSHION RUBBER SBR
1-8	MR315444	MOTOR PULLY (A) (50HZ)
1-9x	MR315445	MOTOR PULLY (B) (60HZ)
1-10	ZS434160	6SET30x030SCM PKR HP
1-11	TPP1002A090A	MAIN GEAR ASSY AP-B20
1-12x	EJ296853	SOCKET INLET CM-3 UCEB 3P (E,B,S)
1-13x	ZS463353	T2BR30x08STL BNI (E,B,S)
1-14	EZ304430	STRAIN RELIEF SR-5K-4
1-15	EW313838	CORD 21068-3 2P AUDIO (U,C,E,B,S)
1-16x	EW303250	CORD P52-011-2 2P AUDIO (A)
1-17	EZ631945	STRAIN RELIEF SR-4N-4(U,C,A)
1-18	EW306428	⚠ AC CORD 2 CORES KP-205A, VFF UCJ (U)
1-19x	EW305691	⚠ AC CORD 2 CORES KP-8, SPT-1 UC (C,A)
1-20	MB302866	BELT
1-21	TP302751	PLATTER
1-22	TP302754	TABLE SHEET (U,C,E,B,S)
1-23x	TP323595	TABLE SHEET (B) (A)
1-24	ES316432	⚠ SW MICRO K2 EUC
1-25	ZG580533	CLAMP SPRING
1-26	ZS305246	ADJUST SCREW (B)
1-27	ZG365433	IDLER TENSION SPRING
1-28	ZS421806	PAN30x08STL CMT
1-29	ZW290283	RING U 285SUP CMT
1-30	ZG580533	CLAMP SPRING
1-31	ZS608253	PAN30x20STL CMT
1-32	TP300454	ARM STAND (C)
1-33x	TP300465	ARM STAND (C-BL)
1-34	SK315432	KNOB (A-BL)
1-35	ZW315478	WAVE WASHER D5 SUS
1-36	ZW313593	PW51x103x050PBR
1-37	TP306519	CANCELLER LEVER
1-38	ZS669104	T2PAN23x06STL CMT
1-39	TP315433	ELEVATION SHAFT
1-40	ZW270088	RING E 190SUP CMT
1-41	ZG306657	LIFTER SPRING
1-42	ZW270101	RING E300SUP CMT
1-43	ZW649991	PW41x070x030PBR
1-44	TPB314128	ELEVATION PART AP-B20
1-45x	ZS521987	6SET26x040SCM PKR HP
1-46	SK315436	LIFTER KNOB
1-47	ZG315434	ELEVATION PLATE SPRING
1-48	TP315435	LIFTER SPRING SHAFT
1-49	TPB314129	ARM REST PART AP-B20
1-50	ZW321029	PW24x050x030BRS NI3
1-51	ZS315488	T1PAN20x05STL CMT
1-52	SB316396	RETURN BUTTON (BL)
1-53	ZG316400	RETURN SPRING
1-54	TPB314130	TONE ARM W/SHELL AP-B20
1-55	TP316423	MAIN WEIGHT
1-56x	TPB319243	TONE ARM W/SHELL AP-B20-S
1-57x	TP324485	MAIN WEIGHT
1-58	ZS306485	6SET40x060SCM NI3 HP
1-59	TP302853	SLEEVE
1-60	ZS356848	PAN23x06STL NI3
1-61	ZG302825	COIL SPRING (4)
1-62x	ZG321734	CANCELLER SPRING (A)
1-63x	SP315449	BOTTOM PLATE
1-64x	TP315447	MOTOR COVER (U,C,E)
1-65x	MZ323851	MOTOR COVER (B) (A,B,S)
1-66x	SA315463	INSULATOR PART
1-67	SM302824	NAME PLATE (AP)
1-68	ZW575730	N SPEED 30
1-69	TP316433	HINGE POCKET
1-70	TP313835	HINGE (C)
1-71	ZS297088	T1PAN30x10STL BNI
1-72	TP302822	SPINDLE METAL
1-73	ZW315467	WASHER (A)
1-74	ZW302855	WASHER
1-75	ZW302896	N90STL CMT P075
1-76	MV368886	BALL 300STL
1-77	TPB302933	SPINDLE SHAFT PART AP-100
1-78	ZS417216	PAN30x04STL CMT
1-79	TP302481	GEAR HOLDER
1-80	ZS309098	T1BID30x15STL NI3
1-81x	ZS426655	BID30x20STL NI3
1-82	TP302880	GEAR STOPPER
1-83	MS302757	STOPPER SHAFT
1-84	ZG324523	GEAR STOPPER SPRING
1-85	TP306810	REJECT LEVER
1-86	ZG306165	REJECT SPRING
1-87	ZS302767	SHAFT SCREW
1-88	TP306650	AUTO LEVER
1-89	ZW270088	RING E 190SUP CMT
1-90	MV269965	BALL 400STL
1-91	TP316404	RETURN CAM
1-92	TP302836	SPEED CHANGING WIRE
1-93	MS315451	KNOB SHAFT
1-94	ZG315477	CLICK SPRING
1-95	ZS530673	ROLLER SCREW (A)
1-96	TP316398	RETURN WIRE
1-97x	ZW413188	N40STL CMT 1
1-98	ZS302823	PROP SCREW
1-99	ZW315515	PW41x130x030NYL
1-100	ZW315517	PW41x130x050NYL
1-101	ZW315518	PW41x130x012LMN
1-102	ZS422965	PAN30x15STL CMT
1-103	EF563681	⚠ FUSE TLC A 250V 1A (U)
1-104x	EF302783	⚠ FUSE ULCS-61ML A 125V 0.40A (C,A)
1-105x	EF300594	⚠ FUSE FST3100 T 250V 0.10A (E,B,S)
1-106	SK302862	SPEED KNOB (A)
1-107x	ZS302786	T1TRS30x15STL CMT
1-108x	ZS447840	T2BR30x08STL CMT
1-109x	TPB324120	DUST COVER PART AP-B20

II. MODEL AP-D33/C

1. D.D SERVO P.C BOARD (APD-3313A) BLOCK

REF. NO.	PARTS NO.	DESCRIPTION
1-1	BAP1012A030A	DD SERVO PC BLK AP-D33 (U) (U,J)
1-2	BAP1012A030B	DD SERVO PC BLK AP-D33(C) (C,A)
1-3	BAP1012A030C	DD SERVO PC BLK AP-D33(E) (E,B,S)
1-IC1to3	EI322599	IC TA75458S
1-TR1to4	ET306705	TR 2SC1815 O,Y
1-TR5	ET325501	TR 2SA1015 O,Y
1-TR6to9	ET306705	TR 2SC1815 O,Y
1-TR10	ET325501	TR 2SA1015 O,Y
1-TR11	ET306705	TR 2SC1815 O,Y
1-TR12	ET325482	TR 2SC1959 Y
1-TR13	ET306719	TR 2SC2236 O,Y
1-TR14	ET306720	TR 2SA966 O,Y
1-TR15	ET306719	TR 2SC2236 O,Y
1-TR16	ET306720	TR 2SA966 O,Y
1-D1	ED309959	D ZENER H HZ5 C3
1-D2	ED326835	D ZENER H 05Z8.2 U
1-D3to6	ED321115	D SILICON H 1S1588LB-5 F10
1-D7to10	ED306724	D SILICON S5277B 100/1.0A
1-VR1,2	EV499364	R S-FIX H V10K8-4-2 3P 502
1-VR3	EV522630	R S-FIX H TM10K(PV) 3P 0.50W 502
1-VR4,5	EV560136	R S-FIX H V10K8-4-2 3P 203
1-VR6	EV499882	R S-FIX H V10K8-4-2 3P 304
1-F3,4	EF306124	⚠ FUSE TSC A 250V 0.63A(U,J)
1-F3,4	EF305703	⚠ FUSE TSC 125V 0.63A (C,A)
1-F3,4	EF300599	⚠ FUSE FST3100 T 250V 0.40A (E,B,S)
1-R21	ER308849	⚠ R CB H SNP FS RD 1/4W 221J
1-R22	ER308873	⚠ R CB H SNP FS RD 1/4W 151J
1-R55	ER304256	R OMF H 2W 560J
1-R56	ER308849	R CB H SNP FS RD 1/4W 221J
1-C6	EC317650	C SA V F05 R47K 16.0DC
1-C7,8	EC325497	C SA V F05 3R3K 16.0DC

2. FUSE P.C BOARD (APD-3052/3062/3063/3319) BLOCK

REF. NO.	PARTS NO.	DESCRIPTION
2-F1,2	EF309389	⚠ FUSE TSC A 250V 0.40A (U)
2-F1	EF306124	⚠ FUSE TSC A 250V 0.63A (J)
2-F1	EF305703	⚠ FUSE TSC 125V 0.63A (C,A)
2-F1	EF300601	⚠ FUSE FST3100 T 250V 0.50A (E,B,S)
2-R2	ER314983	⚠ R OMF H SNP FS 1W 103J
2-C1	EC320548	⚠ C CE V F 103Z 250AC (U,J)
2-C1	EC314688	⚠ C CE V FZ 103P 125AC (C,A)
2-C1	EC330308	⚠ C MMY V ECQUF 103M 250AC (E,B,S)

3. ASSEMBLY BLOCK (1)

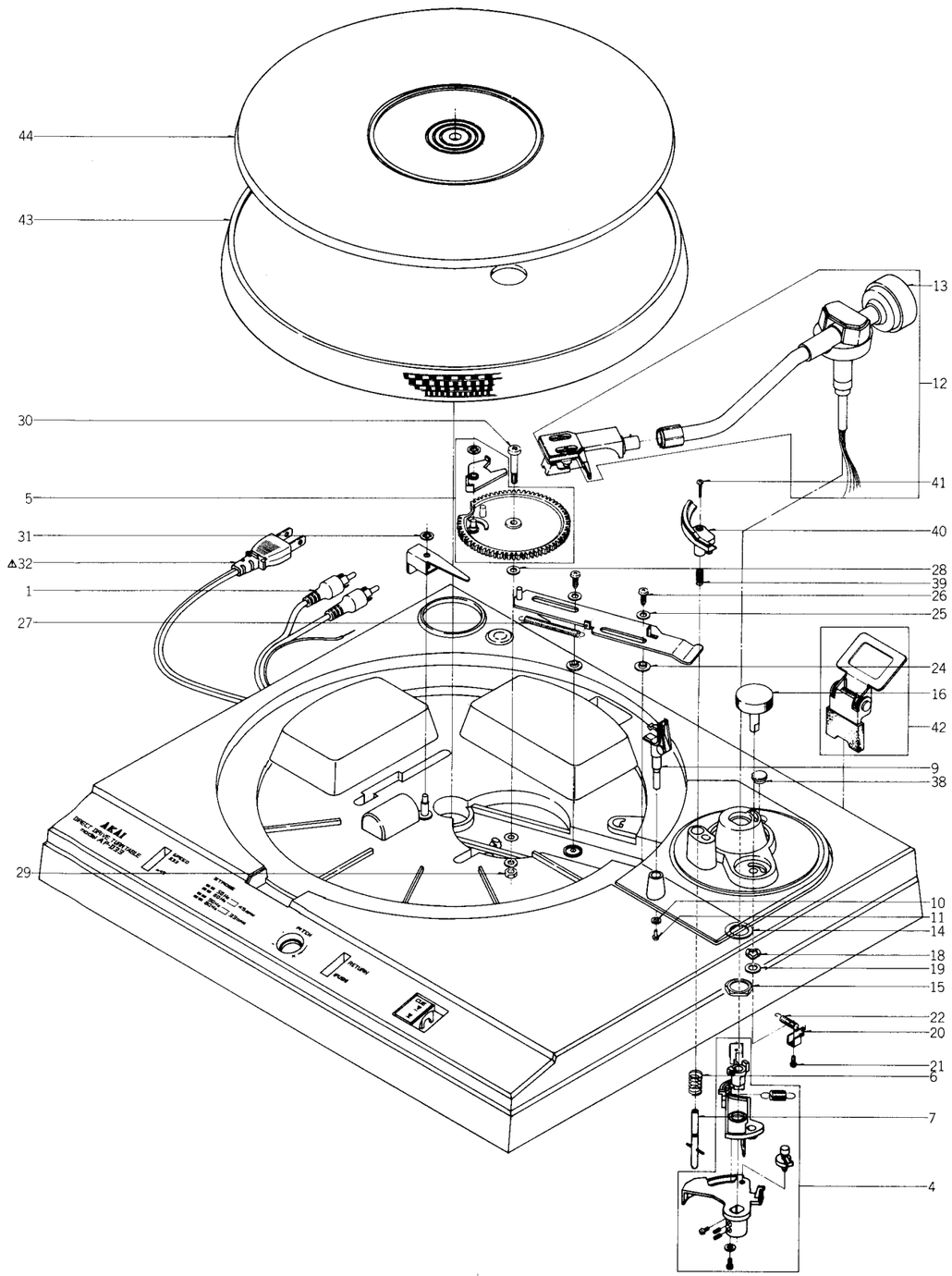

ASSEMBLY BLOCK (1)

REF. NO.	PARTS NO.	DESCRIPTION
3-1	EW325492	CORD 2P AUDIO (U,C,E,B,S)
3-2x	EW313838	CORD 21068-3 2P AUDIO (A)
3-3x	EW325489	CORD P-54-075 2P AUDIO (J)
3-4	TPP1003A110A	PU PLATE ASSY AP-D30
3-5	TPP1003A120A	MAIN GEAR ASSY AP-D30
3-6	ZG325402	ELEVATION SPRING
3-7	TP325403	ELEVATION SHAFT PART
3-8x	ZS325503	PLX PAN30x12STL CMT
3-9	TPB320742	ARM REST PART AP-D30
3-10	ZW300888	PW23x060x040BRS NI3
3-11	ZS669104	T2PAN23x06STL CMT
3-12	TPB320747	TONE ARM W/WHELL AP-D30
3-13	TP325499	MAIN WEIGHT
3-14	ZW325517	PW13x200x050STL CMT
3-15	ZW325521	N120x170x30STL CMT P100
3-16	SKB320740	CANCELER KNOB PART AP-D30
3-17x	SKB320741	CANCELER KNOB PART AP-D30-BL
3-18	ZW315478	WAVE WASHER D5 SUS
3-19	ZW313593	PW51x103x050PBR
3-20	TP306519	CANCELLER LEVER
3-21	ZS669104	T2PAN23x06STL CMT
3-22	ZG302825	COIL SPRING (4) (U,J,C,E,B,S)
3-23x	ZG321734	CANCELER SPRING (A)
3-24	TP325431	RETURN LEVER GUIDE
3-25	ZW550642	PW31x080x050STL CMT
3-26	ZS321537	PLX PAN30x10STL CMT
3-27	ZG313008	SP T1-4.0/0.4-50.0 T1-121
3-28	ZW550642	PW31x080x050STL CMT
3-29	ZW273835	N30BRS NI3 1
3-30	ZG325429	SHAFT SCREW
3-31	ZW653163	RING CS280STL PKR
3-32	EW306428	⚠ AC CORD 2 CORES KP-205A, VFF UCJ (U)
3-33x	EW306427	⚠ AC CORD 2 CORES KP-211, VFF J (J)
3-34x	EW305691	⚠ AC CORD 2 CORES KP-8, SPT-1 UC (CA)
3-35x	EW313882	⚠ AC CORD 2 CORES KP-419C, LTCE-2F E
3-36x	EW313884	⚠ AC CORD 2 CORES GTBS-2F 24/0.20x2 B (B)
3-37x	EW201515	⚠ AC CORD 2 CORES KP-560, LTSA-2F S (S)
3-38	TP302504	RUBBER BUSH
3-39	ZG325470	ELEVATION HIGHT ADJUST SPRING
3-40	TPB320743	ELEVATION ARM PART AP-D30
3-41	ZS325520	PAN26x12STL BNI
3-42	TPB320745	HINGE (D) PART AP-D30
3-43	TP325522	PLATTER (A)
3-44	TP325443	TABLE SHEET
3-45x	TP323593	TABLE SHEET (B)

4. ASSEMBLY BLOCK (2)

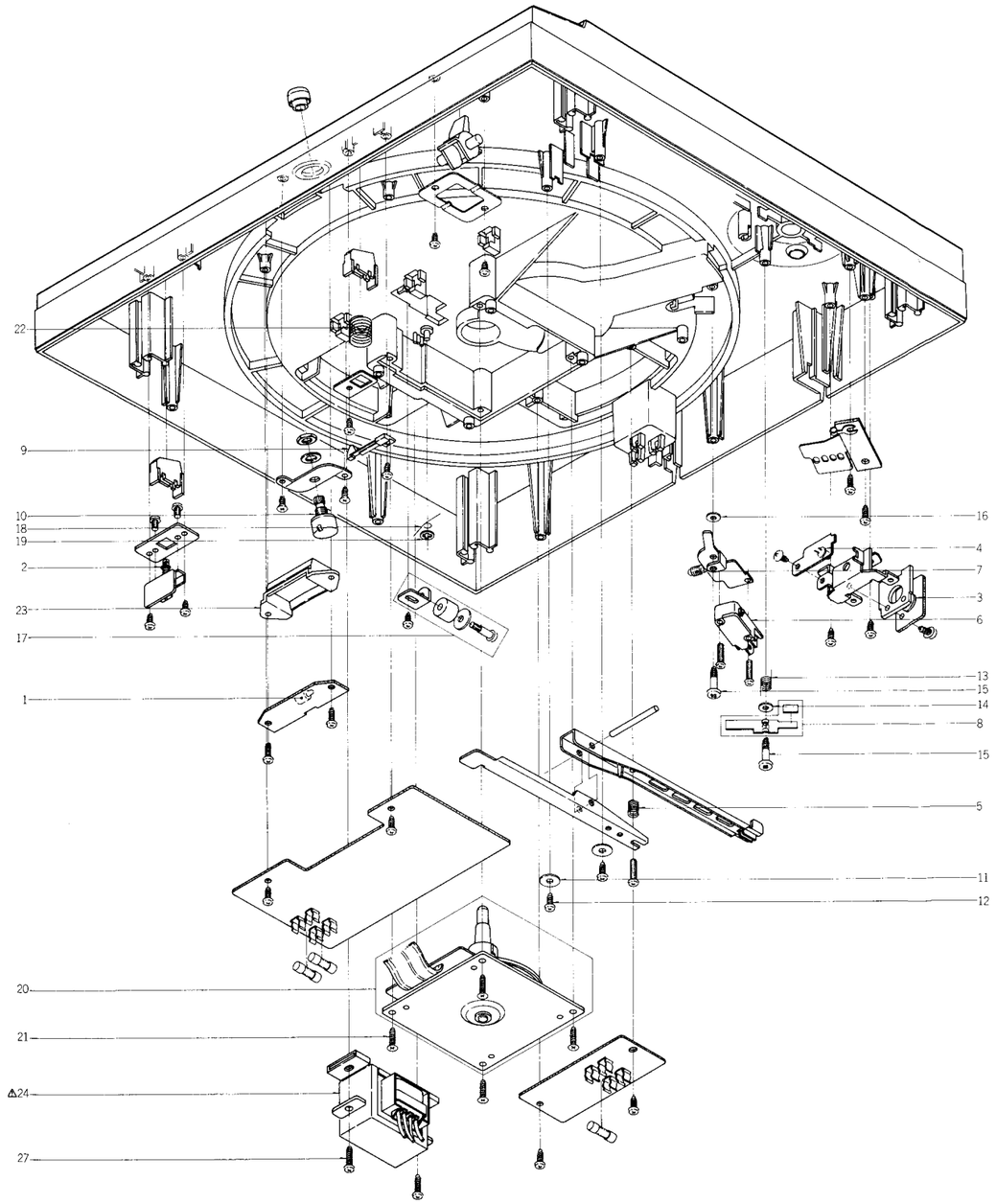

ASSEMBLY BLOCK (2)

REF. NO.	PARTS NO.	DESCRIPTION
4-1	EL306690	NL LEAD NE-2HH 822/100AC
4-2	ES307576	SW PUSH SUJ12 2-02-02N
4-3	ET325339	CDS MPY-12C28H/A.K
4-4	ED325341	D LED TLR-103 RED
4-5	ZG313209	SP C-5.5/0.8-12.5 C-054
4-6	ES325488	SW MICRO K1 UCE
4-7	ZG313072	SP T1-6.3/0.5-25.0 T1-184
4-8	TPP1003A130A	BRAKE LEVER ASSY AP-D30
4-9	ES330315	SW LEAF MSW-0061BU 01-1 NO
4-10	EV325494	VR ROTARY 16S10x0B B102
4-11	ZW556828	PW32x100x050STL CMT
4-12	ZS321537	PLX PAN30x10STL CMT
4-13	ZG325435	BRAKE LEVER SPRING
4-14	ZW616004	PW31x080x100STL CMT
4-15	ZS325426	TAPPING ROLLER SCREW
4-16	ZW550642	PW31x080x050STL CMT
4-17	EPP1003A150A	PLUNGER ASSY NX-9331H
4-18	ZG307818	REJECT SPRING
4-19	ZW653163	RING CS280STL PKR
4-20	BMP1003A040A	MOTOR BLK AP-D30
4-21	ZS325523	BT CTS30x16STL CMT
4-22	ZG316400	RETURN SPRING
4-23	SZ307810	LAMP HOUSE (A)
4-24	BT325486	⚠ TRANS POWER APT30-40 (U,E,B,S)
4-25x	BT328576	⚠ TRANS POWER APT30-10 (J)
4-26x	BT325487	⚠ TRANS POWER APT30-30 (C,A)
4-27	ZS307591	PLX PAN30x14STL CMT

5. FINAL ASSEMBLY BLOCK

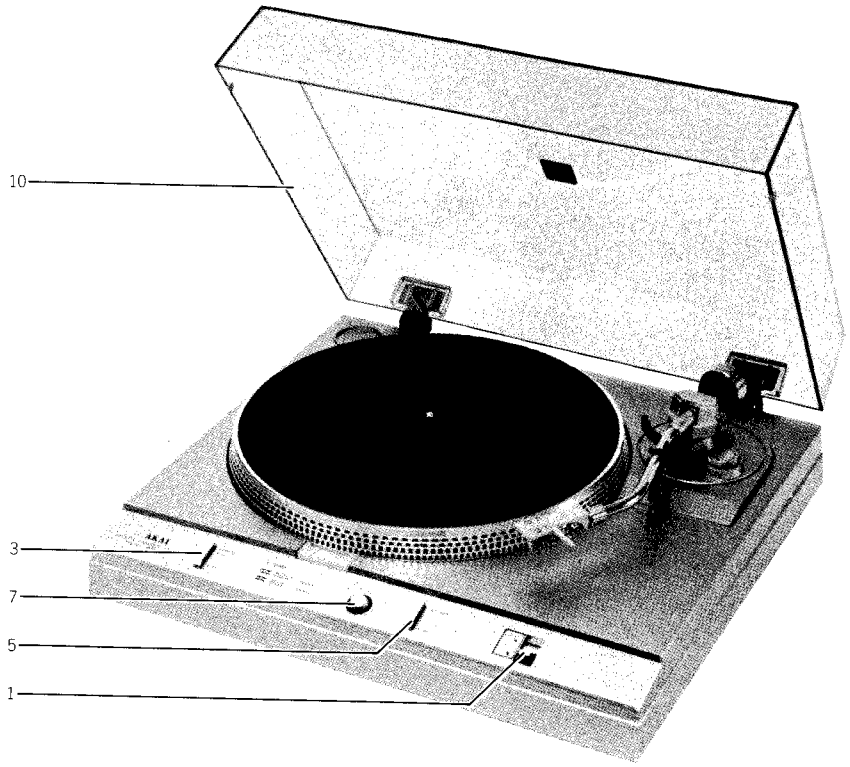

FINAL ASSEMBLY BLOCK

REF. NO.	PARTS NO.	DESCRIPTION
5-1	SK327282	ELEVATION LEVER KNOB
5-2x	SK327283	ELEVATION LEVER KNOB(BL)
5-3	SZ307812A	SPEED CHANGE PUSH
5-4x	SZ307812B	SPEED CHANGE PUSH (BL)
5-5	SZ307812A	SPEED CHANGE PUSH
5-6x	SZ307812B	SPEED CHANGE PUSH (BL)
5-7	SK325414	CONTROL KNOB
5-8x	SK325415	CONTROL KNOB (BL)
5-9	ZS325524	PT BR30x12STL CMT C
5-10	BCB601388	DUST COVER PART
5-11	SP325439	REAR PLATE
5-12	TPB327327	INSULATOR (B) PART AP-D40

III. MODEL AP-Q55/C

1. QUARTZ SERVO P.C BOARD (APQ-5506A) BLOCK

REF. NO.	PARTS NO.	DESCRIPTION
1-1	BAP1013A050A	QUARTZ SERVO PC BLK AP-Q55(U) (U,J)
1-2	BAP1013A050B	QUARTZ SERVO PC BLK AP-Q55(C) (C,A)
1-3	BAP1013A050C	QUARTZ SERVO PC BLK AP-Q55(E) (E,B,S)
1-IC1	EI304657	IC TC4011BP
1-IC2	EI325557	IC AP-400-A (TM4504P)
1-IC3to5	EI322599	IC TA75458S
1-TR1,2	ET307234	TR 2SC1815 Y,GR
1-TR3	ET325482	TR 2SC1959 Y
1-TR4	ET307234	TR 2SC1815 Y,GR
1-TR5	ET325501	TR 2SA1015 O,Y
1-TR6to8	ET307234	TR 2SC1815 Y,GR
1-TR9	ET325501	TR 2SA1015 O,Y
1-TR10	ET306719	TR 2SC2236 O,Y
1-TR11	ET306720	TR 2SA966 O,Y
1-TR12	ET306719	TR 2SC2236 O,Y
1-TR13	ET306720	TR 2SA966 O,Y
1-TR14	ET306721	TR 2SC790 O,Y
1-TR15	ET306719	TR 2SC2236 O,Y
1-TR16	ET306720	TR 2SA966 O,Y
1-TR17	ET310168	TR 2SC2229 O,Y
1-TR18,19	ET307234	TR 2SC1815 Y,GR
1-D1to6	ED321115	D SILICON H 1S1588LB-5 F10
1-D7,8	ED303155	D ZENER H 05Z5.6 U
1-D9	ED323353	D ZENER H 05Z12 L
1-D10to13	ED306724	D SILICON S5277B 100/1.0A
1-D14,15	ED306732	D SILICON S5277D 200/1.0A
1-VR1	EV327391	R S-FIX H D8 3P 504
1-VR2	EV638548	R S-FIX H TM10K(PV) 3P 0.50W 203
1-VR3	EV593368	R S-FIX H V10K8-4-2 3P 303
1-VR4	EV522630	R S-Fix H TM10k(PV) 3P 0.50W 502
1-VR5,6	EV560136	R S-FIX H V10K8-4-2 3P 203
1-VR7	EV648527	R S-FIX H V10K-8-4-2 3P 204
1-L1	EO328137	COIL FIX 2 NI-0036 2.2μH
1-X1	EI324532	OSC X'TAL 5.4MHz
1-VC1	EC616342	C S-FIX H CTY122D33 1.5-16
1-F3	EF308933	⚠ FUSE TSC A 250V 0.20A (U,J)
1-F3	EF315334	⚠ FUSE TSC 125V 0.25A (C,A)
1-F3	EF300595	⚠ FUSE FST3100 T 250V 0.12A (E,B,S)
1-F4,5	EF327103	⚠ FUSE TSC A 250V 0.50 (U,J)
1-F4,5	EF309390	⚠ FUSE TSC 125V 0.50V (C,A)
1-F4,5	EF300598	⚠ FUSE FST3100 T 250V 0.31A (E,B,S)
1-R1	ER327710	⚠ R CB H SNP FS RDS 1/4W 151J
1-C19,20	EC325559	C SA V F05 1R5K 25DC

2. FUSE P.C BOARD (APD-3052/APQ-5014/ APQ-5016/APQ-5017) BLOCK

REF. NO.	PARTS NO.	DESCRIPTION
2-F1,2	EF309389	⚠ FUSE TSC A 250V 0.40A (U)
2-F1	EF306124	⚠ FUSE TSC A 250V 0.63A (J)
2-F1	EF308848	⚠ FUSE TSC 125V 0.40A (C,A)
2-F1	EF695766	⚠ FUSE SEMKO T 250V 0.31A (E,B,S)
2-C1	EC320548	⚠ C CE V F 103Z 250AC (U,J)
2-C1	EC314688	⚠ C CE V FZ 103P 125AC (C,A)
2-C1	EC330308	⚠ C MMY V ECQUF 103AC (E,B,S)

3. ASSEMBLY BLOCK (1)

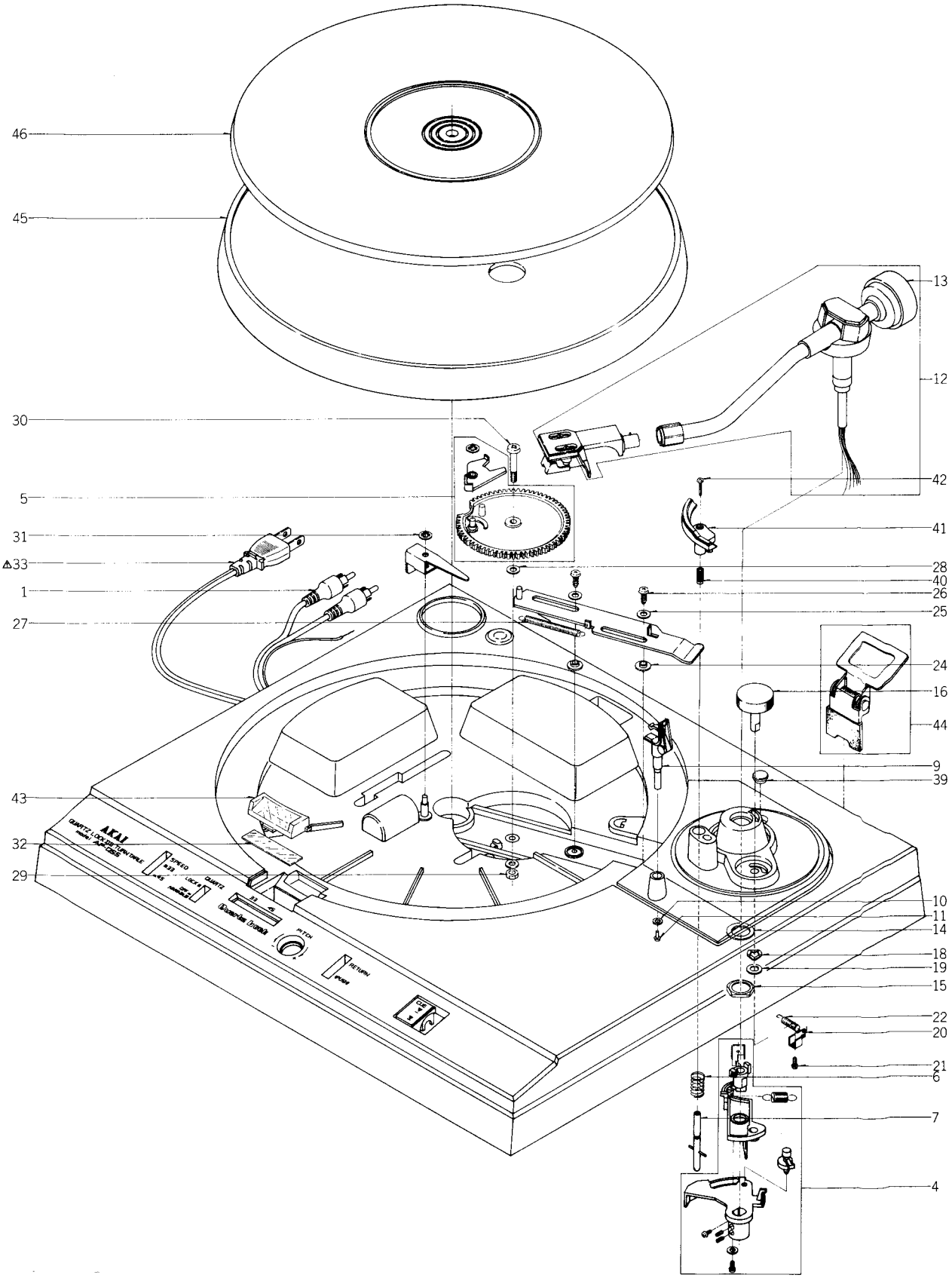

ASSEMBLY BLOCK (1)

REF. NO.	PARTS NO.	DESCRIPTION
3-1	EW325492	CORD 2P AUDIO (U,C,E,B,S)
3-2x	EW325489	CORD P-54-075 2P AUDIO (A)
3-3x	EW313838	CORD 21068-3 2P AUDIO (J)
3-4	TPP1005A160A	PU PLATE ASSY AP-Q50
3-5	TPP1005A170A	MAIN GEAR ASSY AP-Q50
3-6	ZG325402	ELEVATION SPRING
3-7	TP325403	ELEVATION SHAFT PART
3-8x	ZS325503	PLX PAN30x12STL CMT
3-9	TPB320742	ARM REST PART AP-D30
3-10	ZW300888	PW23x060x040BRS NI3
3-11	ZS669104	T2PAN23x06STL CMT
3-12	TPB320747	TONE ARM W/SHELL AP-D30
3-13	TP325499	MAIN WEIGHT
3-14	ZW325517	PW13x200x050STL CMT
3-15	ZW325521	N120x170x30STL CMT P100
3-16	SKB320740	CANCELER KNOB PART AP-D30
3-17x	SKB320741	CANCELER KNOB PART AP-D30-BL
3-18	ZW315478	WAVE WASHER D5 SUS
3-19	ZW313593	PW51x103x050PBR
3-20	TP306519	CANCELER LEVER
3-21	ZS669104	T2PAN23x06STL CMT
3-22	ZG302825	COIL SPRING (4) (U,J,C,E,B,S)
3-23x	ZG321734	CANCELER SPRING (A)
3-24	TP325431	RETURN LEVER GUIDE
3-25	ZW550642	PW31x080x050STL CMT
3-26	ZS321537	PLX PAN30x10STL CMT
3-27	ZG313008	SP T1-4.0/0.4-50.0 T1-121
3-28	ZW550642	PW31x080x050STL CMT
3-29	ZW273835	N30BRS NI3 1
3-30	ZG325429	SHAFT SCREW
3-31	ZW653163	RING CS280STL PKR
3-32	TP307838	STROBO MIRROR
3-33	EW306428	⚠ AC CORD 2 CORES KP-205A, VFF UCJ (U)
3-34x	EW306427	⚠ AC CORD 2 CORES KP-211, VFF J (J)
3-35x	EW305691	⚠ AC CORD 2 CORES KP-8, SPT-1 UC (C,A)
3-36x	EW313882	⚠ AC CORD 2 CORES KP-419C, LTCE-2F E (E)
3-37x	EW313884	⚠ AC CORD 2 CORES GTBS-2F 24/0.20x2 B (B)
3-38x	EW201515	⚠ AC CORD 2 CORES KP-560, LTSA-2F S (S)
3-39	TP302504	RUBBER BUSH
3-40	ZG325470	ELEVATION HIGHT ADJUST SPRING
3-41	TPB320743	ELEVATION ARM PART AP-D30
3-42	ZS325520	PAN26x12STL BNI
3-43	SZ307843	LAMP HOUSE (B)
3-44	TPB320745	HINGE (D) PART AP-D30
3-45	TP325551	PLATTER (C)
3-46	TP325443	TABLE SHEET
3-47x	TP323593	TABLE SHEET (B)

4. ASSEMBLY BLOCK (2)

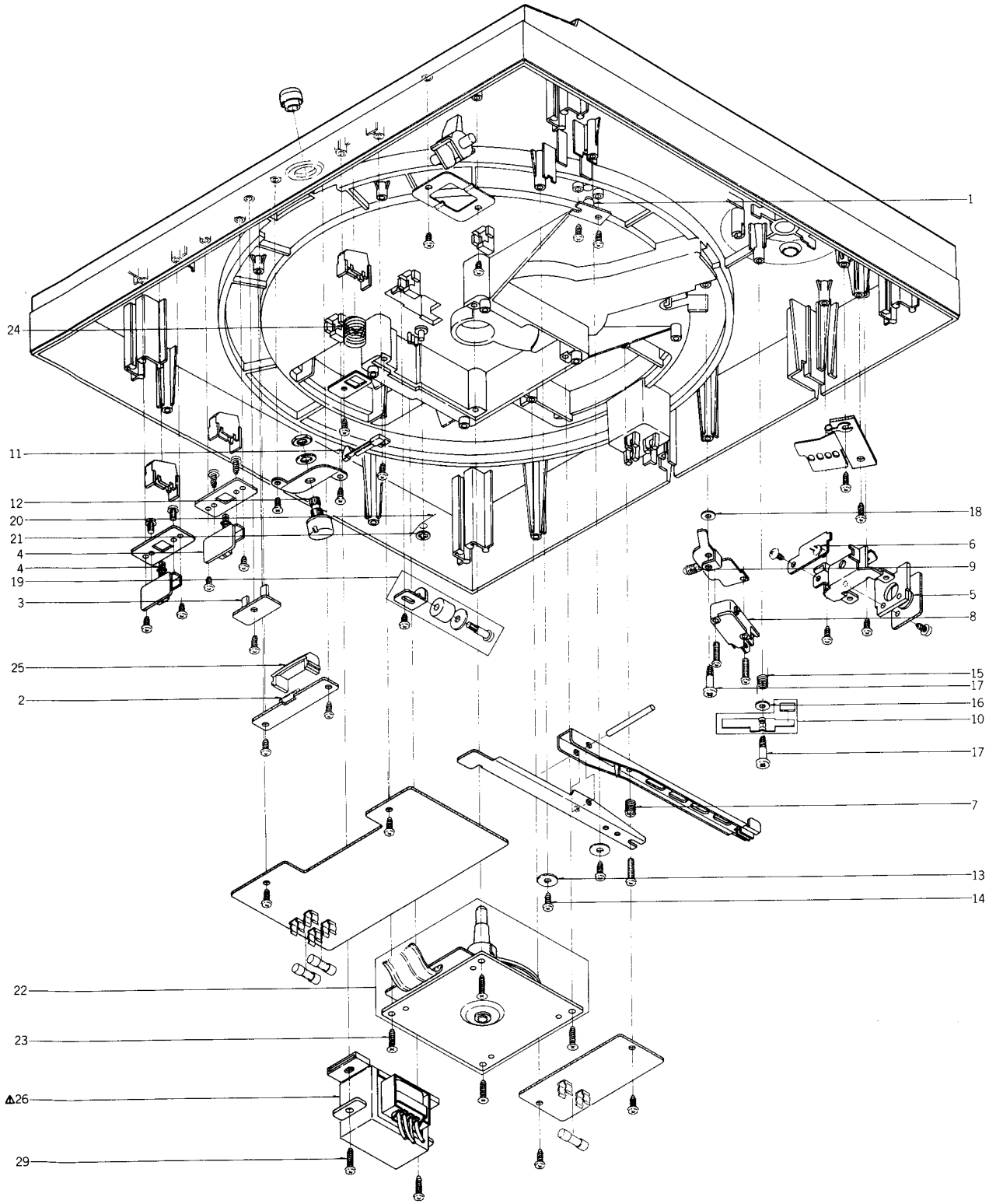

ASSEMBLY BLOCK (2)

REF. NO.	PARTS NO.	DESCRIPTION
4-1	EI325556	PHOTO SENSOR NJL5141E-B A,B,C
4-2	EL325554	NL LEAD NE-2HH-D6 103/170DC
4-3	ED322772	D LED SLP-155D-01 RED
4-4	ES307576	SW PUSH SUJ12 2-02-02N
4-5	ET325339	CDS MPY-12C28H/A.K
4-6	ED325341	D LED TLR-103 RED
4-7	ZG313209	SP C-5.5/0.8-12.5 C-054
4-8	ES325488	SW MICRO K1 UCE
4-9	ZG313072	SP T1-6.3/0.5-25.0 T1-184
4-10	TPP1005A180A	BRAKE LEVER ASSY AP-Q50
4-11	ES330315	SW LEAF MSW-0061BU 01-1 NO
4-12	EV325555	VR ROTARY 16S10x0C B502
4-13	ZW556828	PW32x100x050STL CMT
4-14	ZS321537	PLX PAN30x10STL CMT
4-15	ZG325435	BRAKE LEVER SPRING
4-16	ZW616004	PW31x080x100STL CMT
4-17	ZS325426	TAPPING ROLLER SCREW
4-18	ZW550642	PW31x080x050STL CMT
4-19	EPP1003A150A	PLUNGER ASSY NX-9331H
4-20	ZG307818	REJECT SPRING
4-21	ZW653163	RING CS280STL PKR
4-22	BMP1003A040A	MOTOR BLK AP-D30
4-23	ZS325523	BT CTS30x16STL CMT
4-24	ZG316400	RETURN SPRING
4-25	SZ325537	LAMP HOUSE (B)
4-26	BT325552	⚠ TRANS POWER APT50-40 (U,E,B,S)
4-27x	BT307606	⚠ TRANS POWER APT55-10 (J)
4-28x	BT325553	⚠ TRANS POWER APT50-30 (C,A)
4-29	ZS307591	PLX PAN30x14STL CMT

5. FINAL ASSEMBLY BLOCK

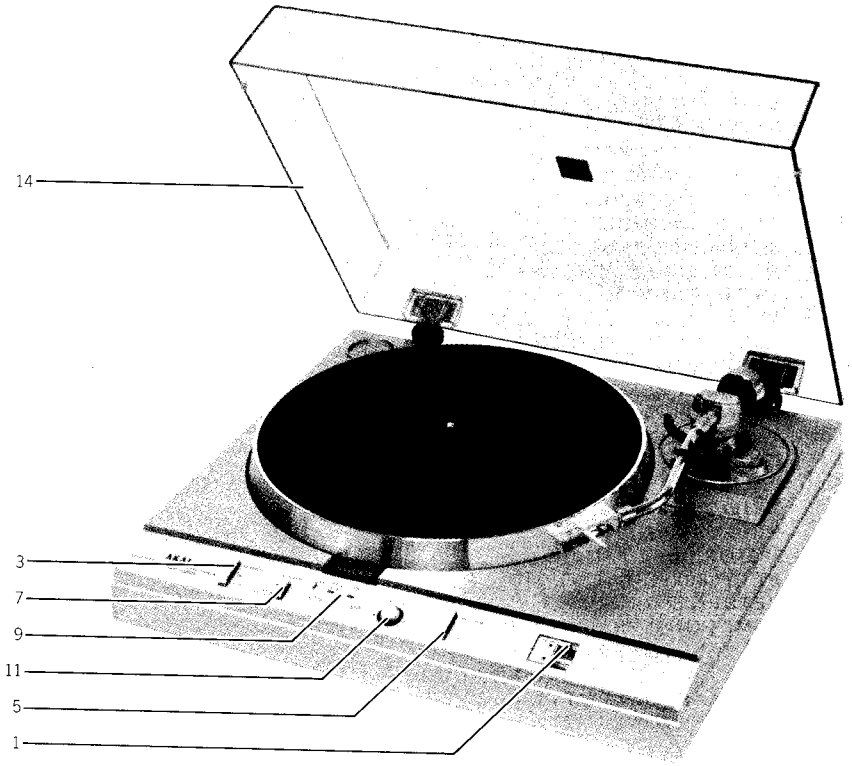

FINAL ASSEMBLY BLOCK

REF. NO.	PARTS NO.	DESCRIPTION
5-1	SK327282	ELEVATION LEVER KNOB
5-2x	SK327283	ELEVATION LEVER KNOB(BL)
5-3	SZ307812A	SPEED CHANGE PUSH
5-4x	SZ307812B	SPEED CHANGE PUSH (BL)
5-5	SZ307812A	SPEED CHANGE PUSH
5-6x	SZ307812B	SPEED CHANGE PUSH (BL)
5-7	SZ307839A	QUARTZ PUSH
5-8x	SZ307839B	QUARTZ PUSH (BL)
5-9	SZ307841A	LED DECORATION PLATE
5-10x	SZ307841B	LED DECORATION PLATE (BL)
5-11	SK325414	CONTROL KNOB
5-12x	SK325415	CONTROL KNOB (BL)
5-13x	ZS325524	PT BR30×12STL CMT C
5-14	BCB601388	DUST COVER PART
5-15	SP325439	REAR PLATE
5-16	TPB327327	INSULATOR (B) PART AP-D40

INDEX

1. MODEL AP-B21/C

PARTS NO.	REF. NO.	PARTS NO.	REF. NO.	PARTS NO.	REF. NO.	PARTS NO.	REF. NO.
BMP1002A050A	1-5	SM302824	1-67	TP323595	1-23x	ZS530673	1-95
BMP1002A060A	1-6x	SP315449	1-63x	TP324485	1-57x	ZS608253	1-31
EC302898	1-2	SZ302793	1-7	ZG302825	1-61	ZS669104	1-38
EC308528	1-4x	TPB302933	1-77	ZG306165	1-86	ZW270088	1-89
EC314688	1-3x	TPB314128	1-44	ZG306657	1-41	ZW270088	1-40
EF300594	1-105x	TPB314129	1-49	ZG315434	1-47	ZW270101	1-42
EF302783	1-104x	TPB314130	1-54	ZG315477	1-94	ZW290283	1-29
EF563681	1-103	TPB319243	1-56x	ZG316400	1-53	ZW302855	1-74
EJ296853	1-12x	TPB324120	1-109x	ZG321734	1-62x	ZW302896	1-75
ES315513	1-1	TPP1002A090A	1-11	ZG324523	1-84	ZW313593	1-36
ES316432	1-24	TP300454	1-32	ZG365433	1-27	ZW315467	1-73
EW303250	1-16x	TP300465	1-33x	ZG580533	1-30	ZW315478	1-35
EW305691	1-19x	TP302481	1-79	ZG580533	1-25	ZW315515	1-99
EW306428	1-18	TP302751	1-21	ZS297088	1-71	ZW315517	1-100
EW313838	1-15	TP302754	1-22	ZS302767	1-87	ZW315518	1-101
FZ304430	1-14	TP302822	1-72	ZS302786	1-107x	ZW321029	1-50
EZ631945	1-17	TP302836	1-92	ZS302823	1-98	ZW413188	1-97x
MB302866	1-20	TP302853	1-59	ZS305246	1-26	ZW575730	1-68
MR315444	1-8	TP302880	1-82	ZS306485	1-58	ZW649991	1-43
MR315445	1-9x	TP306519	1-37	ZS309098	1-80		
MS302757	1-83	TP306650	1-88	ZS315488	1-51		
MS315451	1-93	TP306810	1-85	ZS356848	1-60		
MV269965	1-90	TP313835	1-70	ZS417216	1-78		
MV368886	1-76	TP315433	1-39	ZS421806	1-28		
MZ323851	1-65x	TP315435	1-48	ZS422965	1-102		
SA315463	1-66x	TP315447	1-64x	ZS426655	1-81x		
SB316396	1-52	TP316398	1-96	ZS434160	1-10		
SK302862	1-106	TP316404	1-91	ZS447840	1-108x		
SK315432	1-34	TP316423	1-55	ZS463353	1-13x		
SK315436	1-46	TP316433	1-69	ZS521987	1-45x		

2. MODEL AP-D33/C

PARTS NO.	REF. NO.	PARTS NO.	REF. NO.	PARTS NO.	REF. NO.	PARTS NO.	REF. NO.
BAP1012A030A	1-1	ET306719	1-TR15	TPP1003A130A	4-8	ZW616004	4-14
BAP1012A030B	1-2	ET306720	1-TR16	TP302504	3-38	ZW653163	3-31
BAP1012A030C	1-3	ET306720	1-TR14	TP306519	3-20	ZW653163	4-19
BCB601388	5-10	ET325339	4-3	TP323593	3-45x		
BMP1003A040A	4-20	ET325482	1-TR12	TP325403	3-7		
BT325486	4-24	ET325501	1-TR10	TP325431	3-24		
BT325487	4-26x	ET325501	1-TR5	TP325443	3-44		
BT328576	4-25x	EV325494	4-10	TP325499	3-13		
EC314688	2-C1	EV499364	1-VR1,2	TP325522	3-43		
EC317650	1-C6	EV499882	1-VR6	ZG302825	3-22		
EC320548	2-C1	EV522630	1-VR3	ZG307818	4-18		
EC325497	1-C7,8	EV560136	1-VR4,5	ZG313008	3-27		
EC330308	2-C1	EW201515	3-37x	ZG313072	4-7		
ED306724	1-D7to10	EW305691	3-34x	ZG313209	4-5		
ED309959	1-D1	EW306427	3-33x	ZG316400	4-22		
ED321115	1-D3to6	EW306428	3-32	ZG321734	3-23x		
ED325341	4-4	EW313838	3-2x	ZG325402	3-6		
ED326835	1-D2	EW313882	3-35x	ZG325429	3-30		
EF300599	1-F3,4	EW313884	3-36x	ZG325435	4-13		
EF300601	2-F1	EW325489	3-3x	ZG325470	3-39		
EF305703	1-F3,4	EW325492	3-1	ZS307591	4-27		
EF305703	2-F1	SKB320740	3-16	ZS321537	3-26		
EF306124	1-F3,4	SKB320741	3-17x	ZS321537	4-12		
EF306124	2-F1	SK325414	5-7	ZS325426	4-15		
EF309389	2-F1,2	SK325415	5-8x	ZS325503	3-8x		
EI322599	1-IC1to3	SK327282	5-1	ZS325520	3-41		
EL306690	4-1	SK327283	5-2x	ZS325523	4-21		
EPP1003A150A	4-17	SP325439	5-11	ZS325524	5-9		
ER304256	1-R55	SZ307810	4-23	ZS669104	3-21		
ER308849	1-R56	SZ307812A	5-3	ZS669104	3-11		
ER308849	1-R21	SZ307812A	5-5	ZW273835	3-29		
ER308873	1-R22	SZ307812B	5-4x	ZW300888	3-10		
ER314983	2-R2	SZ307812B	5-6x	ZW313593	3-19		
ES307576	4-2	TPB320742	3-9	ZW315478	3-18		
ES325488	4-6	TPB320743	3-40	ZW325517	3-14		
ES330315	4-9	TPB320745	3-42	ZW325521	3-15		
ET306705	1-TR11	TPB320747	3-12	ZW550642	3-28		
ET306705	1-TR1to4	TPB327327	5-12	ZW550642	3-25		
ET306705	1-TR6to9	TPP1003A110A	3-4	ZW550642	4-16		
ET306719	1-TR13	TPP1003A120A	3-5	ZW556828	4-11		

3. MODEL AP-Q55/C

PARTS NO.	REF. NO.	PARTS NO.	REF. NO.	PARTS NO.	REF. NO.	PARTS NO.	REF. NO.
BAP1013A050A	1-1	ES325488	4-8	SP325439	5-15	ZS321537	3-26
BAP1013A050B	1-2	ES330315	4-11	SZ307812A	5-3	ZS321537	4-14
BAP1013A050C	1-3	ET306719	1-TR15	SZ307812A	5-5	ZS325426	4-17
BCB601388	5-14	ET306719	1-TR10	SZ307812B	5-4x	ZS325503	3-8x
BMP1003A040A	4-22	ET306719	1-TR12	SZ307812B	5-6x	ZS325520	3-42
BT307606	4-27x	ET306720	1-TR13	SZ307839	5-7	ZS325523	4-23
BT325552	4-26	ET306720	1-TR16	SZ307839B	5-8x	ZS325524	5-13x
BT325553	4-28x	ET306720	1-TR11	SZ307841A	5-9	ZS669104	3-21
EC314688	2-C1	ET306721	1-TR14	SZ307841B	5-10x	ZS669104	3-11
EC320548	2-C1	ET307234	1-TR4	SZ307843	3-43	ZW273835	3-29
EC325559	1-C19,20	ET307234	1-TR18,19	SZ325537	4-25	ZW300888	3-10
EC330308	2-C1	ET307234	1-TR6to8	TPB320742	3-9	ZW313593	3-19
EC616342	1-VC1	ET307234	1-TR1,2	TPB320743	3-41	ZW315478	3-18
ED303155	1-D7,8	ET310168	1-TR17	TPB320745	3-44	ZW325517	3-14
ED306724	1-D10to13	ET325339	4-5	TPB320747	3-12	ZW325521	3-15
ED306732	1-D14,15	ET325482	1-TR3	TPB327327	5-16	ZW550642	3-25
ED321115	1-D1to6	ET325501	1-TR5	TPP1005A160A	3-4	ZW550642	3-28
ED322772	4-3	ET325501	1-TR9	TPP1005A170A	3-5	ZW550642	4-18
ED323353	1-D9	EV325555	4-12	TPP1005A180A	4-10	ZW556828	4-13
ED325341	4-6	EV327391	1-VR1	TP302504	3-39	ZW616004	4-16
EF300595	1-F3	EV522630	1-VR4	TP306519	3-20	ZW653163	3-31
EF300598	1-F4,5	EV560136	1-VR5,6	TP307838	3-32	ZW653163	4-21
EF306124	2-F1	EV593368	1-VR3	TP323593	3-47x		
EF308848	2-F1	EV638548	1-VR2	TP325403	3-7		
EF308933	1-F3	EV648527	1-VR7	TP325431	3-24		
EF309389	2-F1,2	EW201515	3-38x	TP325443	3-46		
EF309390	1-F4,5	EW305691	3-35x	TP325499	3-13		
EF315334	1-F3	EW306427	3-34x	TP325551	3-45		
EF327103	1-F4,5	EW306428	3-33	ZG302825	3-22		
EF695766	2-F1	EW313838	3-3x	ZG307818	4-20		
EI304657	1-IC1	EW313882	3-36x	ZG313008	3-27		
EI322599	1-IC3to5	EW313884	3-37x	ZG313072	4-9		
EI324532	1-X1	EW325489	3-2x	ZG313209	4-7		
EI325556	4-1	EW325492	3-1	ZG316400	4-24		
EI325557	1-IC2	SKB320740	3-16	ZG321734	3-23x		
EL325554	4-2	SKB320741	3-17x	ZG325402	3-6		
EO328137	1-L1	SK325414	5-11	ZG325429	3-30		
EPP1003A150A	4-19	SK325415	5-12x	ZG325435	4-15		
ER327710	1-R1	SK327282	5-1	ZG325470	3-40		
ES307576	4-4	SK327283	5-2x	ZS307591	4-29		

SECTION 4

SCHEMATIC DIAGRAM

1. SCHEMATIC DIAGRAM ICs
2. AP-B21/C NO. 1620658A SCHEMATIC DIAGRAM
3. AP-D33/C NO. 1620660A SCHEMATIC DIAGRAM
4. AP-Q55/C NO. 1620661A SCHEMATIC DIAGRAM

AP-400-A

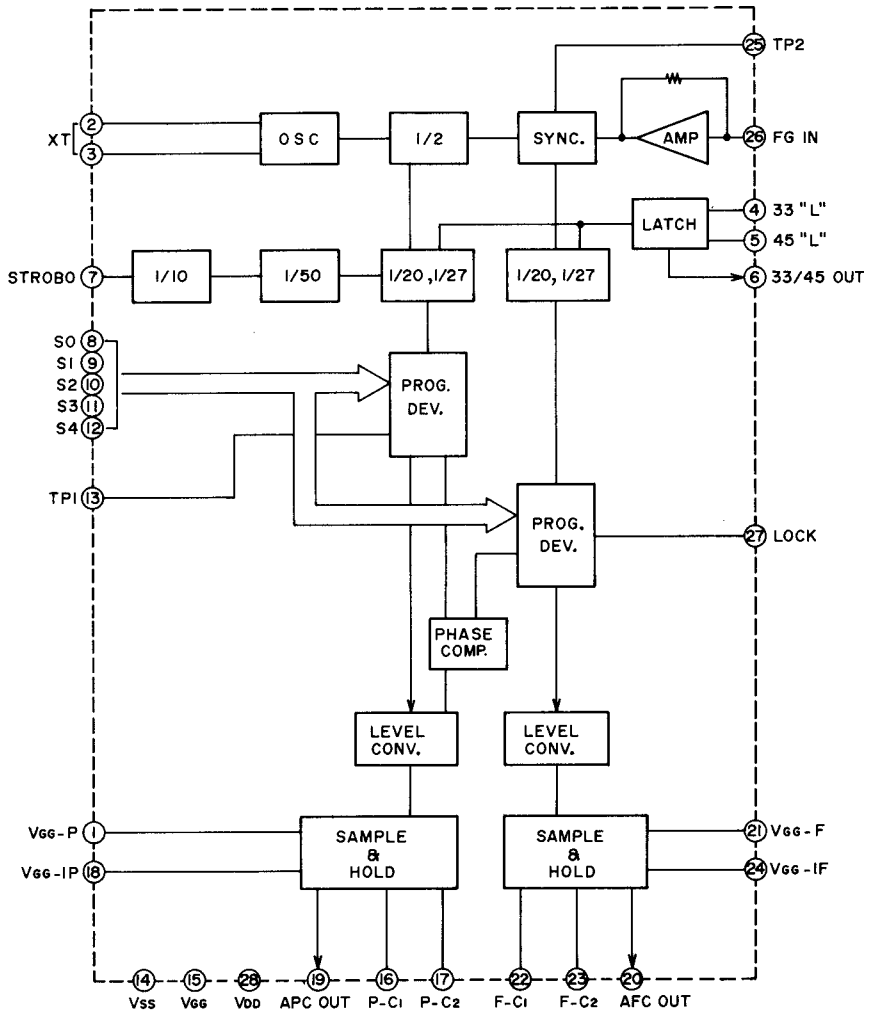

TA75458S

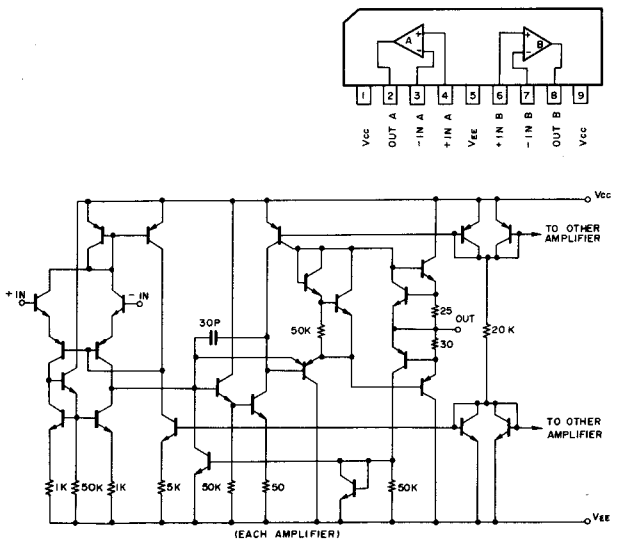

TC4011BP

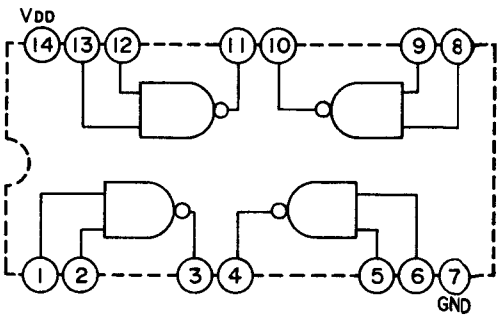

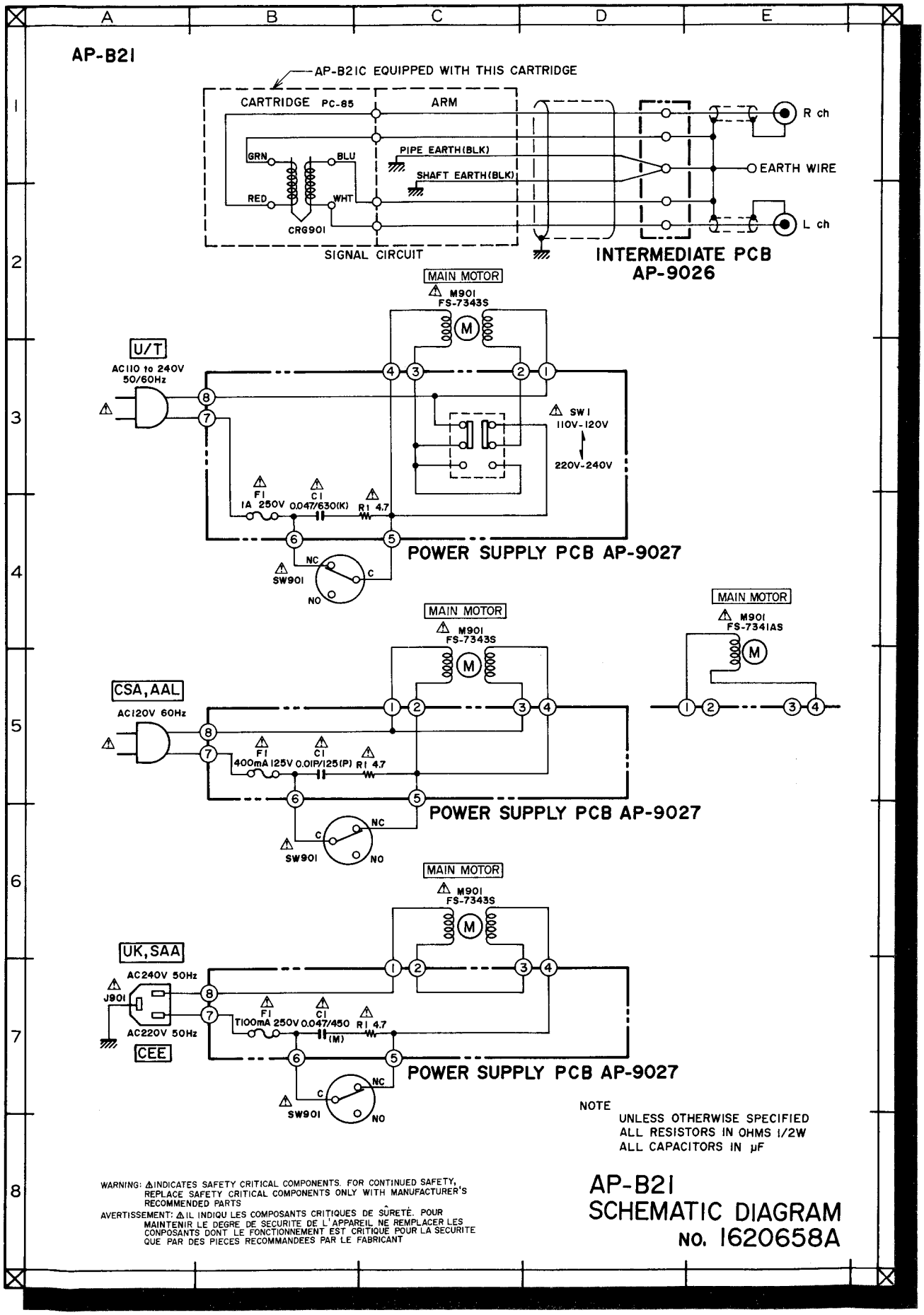
AP-B21
AP-B21C EQUIPPED WITH THIS CARTRIDGE
CARTRIDGE PC-85
ARM
GRN
BLU
RED
WHT
CRG901
PIPE EARTH(BLK)
SHAFT EARTH(BLK)
SIGNAL CIRCUIT
R ch
EARTH WIRE
L ch
INTERMEDIATE PCB
AP-9026
MAIN MOTOR
M901
FS-7343S
U/T
AC110 to 240V
50/60Hz
SW1
110V-120V
220V-240V
F1
1A 250V
C1
0.047/630(K)
R1 4.7
POWER SUPPLY PCB AP-9027
SW901
NC
C
NO
MAIN MOTOR
M901
FS-7343S
CSA,AAL
AC120V 60Hz
F1
400mA 125V
C1
0.01P/125(P)
R1 4.7
POWER SUPPLY PCB AP-9027
SW901
NC
C
NO
MAIN MOTOR
M901
FS-7341AS
MAIN MOTOR
M901
FS-7343S
UK,SAA
AC240V 50Hz
J901
AC220V 50Hz
CEE
F1
T100mA 250V
C1
0.047/450
(M)
R1 4.7
POWER SUPPLY PCB AP-9027
SW901
NC
C
NO
NOTE
UNLESS OTHERWISE SPECIFIED
ALL RESISTORS IN OHMS 1/2W
ALL CAPACITORS IN μF
WARNING: ⚠INDICATES SAFETY CRITICAL COMPONENTS. FOR CONTINUED SAFETY, REPLACE SAFETY CRITICAL COMPONENTS ONLY WITH MANUFACTURER'S RECOMMENDED PARTS
AVERTISSEMENT: ⚠IL INDIQU LES COMPOSANTS CRITIQUES DE SÛRETÉ. POUR MAINTENIR LE DEGRE DE SECURITE DE L'APPAREIL NE REMPLACER LES CONPOSANTS DONT LE FONCTIONNEMENT EST CRITIQUE POUR LA SECURITE QUE PAR DES PIECES RECOMMANDEES PAR LE FABRICANT
AP-B21
SCHEMATIC DIAGRAM
NO. 1620658A

AP-D33/C

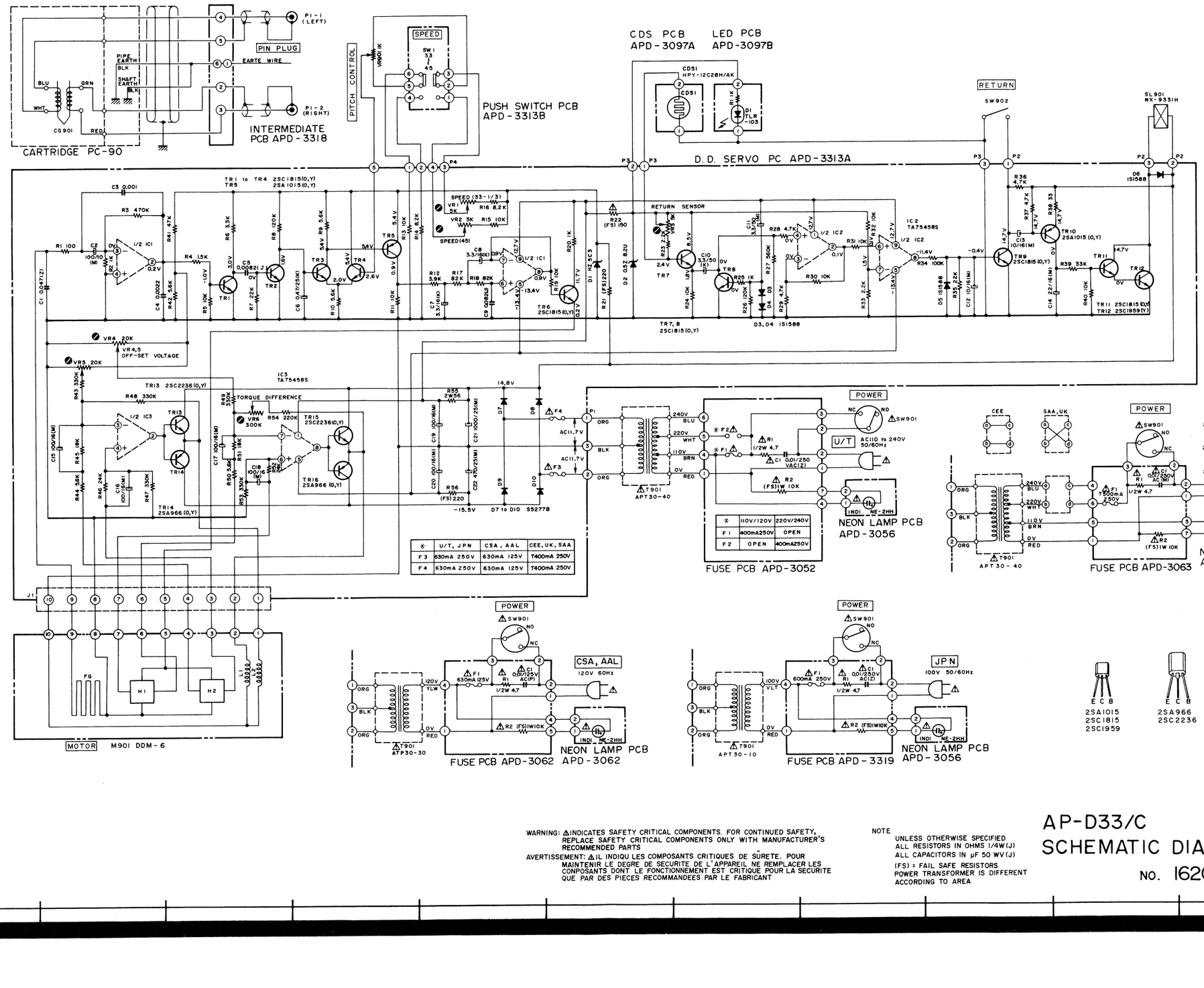

WARNING: ⚠INDICATES SAFETY CRITICAL COMPONENTS. FOR CONTINUED SAFETY, REPLACE SAFETY CRITICAL COMPONENTS ONLY WITH MANUFACTURER'S RECOMMENDED PARTS

AVERTISSEMENT: ⚠IL INDIQU LES COMPOSANTS CRITIQUES DE SÛRETE. POUR MAINTENIR LE DEGRE DE SECURITE DE L'APPAREIL NE REMPLACER LES CONPOSANTS DONT LE FONCTIONNEMENT EST CRITIQUE POUR LA SECURITE QUE PAR DES PIECES RECOMMANDEES PAR LE FABRICANT

NOTE
UNLESS OTHERWISE SPECIFIED
ALL RESISTORS IN OHMS 1/4W(J)
ALL CAPACITORS IN μF 50 WV(J)
(FS) = FAIL SAFE RESISTORS
POWER TRANSFORMER IS DIFFERENT ACCORDING TO AREA

AP-D33/C SCHEMATIC DIAGRAM

NO. 1620660A

001173

AP-Q55/C

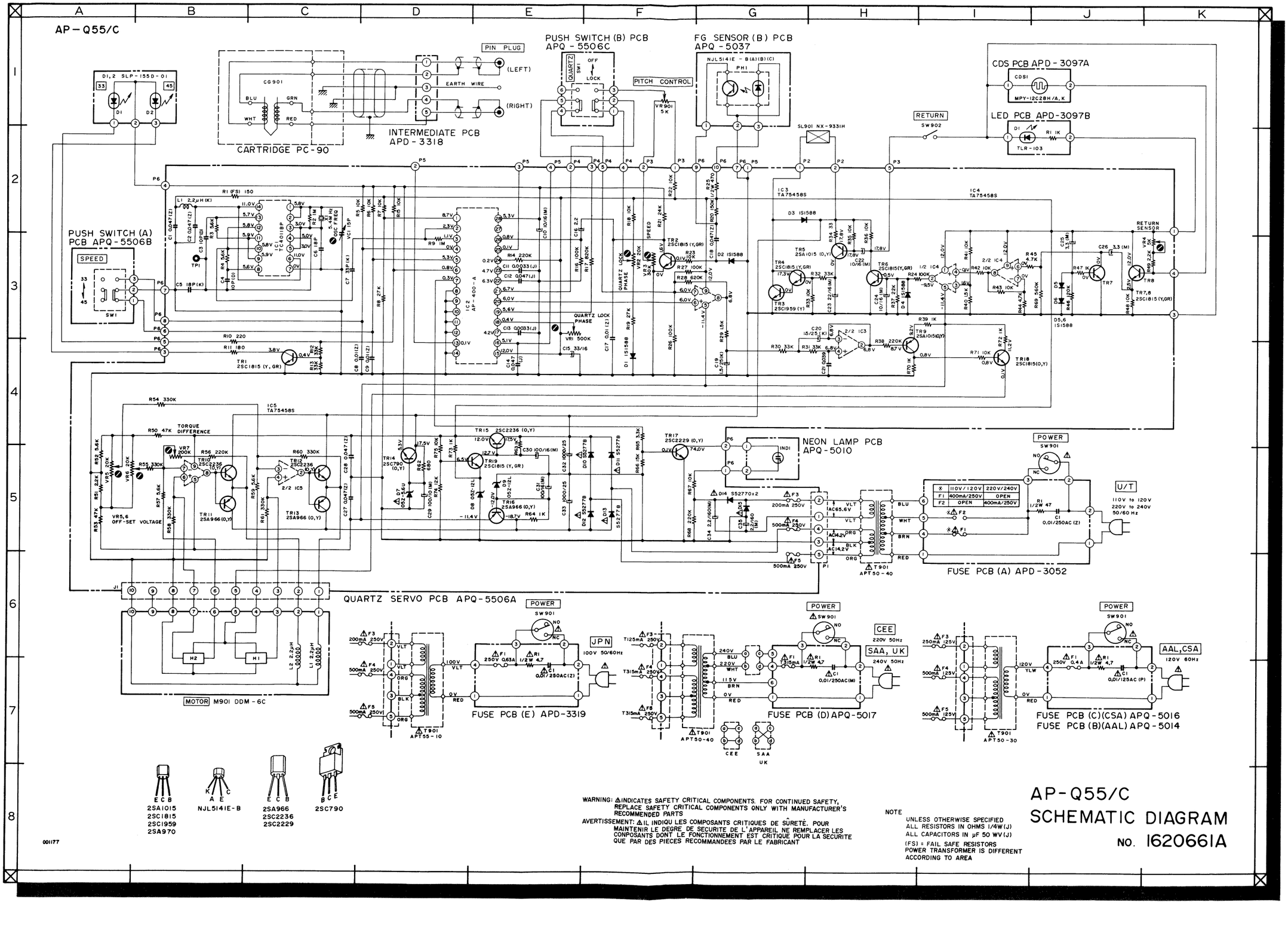

WARNING: ⚠INDICATES SAFETY CRITICAL COMPONENTS. FOR CONTINUED SAFETY, REPLACE SAFETY CRITICAL COMPONENTS ONLY WITH MANUFACTURER'S RECOMMENDED PARTS

AVERTISSEMENT: ⚠IL INDIQU LES COMPOSANTS CRITIQUES DE SÛRETÉ. POUR MAINTENIR LE DEGRÉ DE SECURITE DE L'APPAREIL NE REMPLACER LES CONPOSANTS DONT LE FONCTIONNEMENT EST CRITIQUE POUR LA SECURITE QUE PAR DES PIECES RECOMMANDEES PAR LE FABRICANT

NOTE
UNLESS OTHERWISE SPECIFIED
ALL RESISTORS IN OHMS 1/4W(J)
ALL CAPACITORS IN μF 50 WV(J)
(FS) = FAIL SAFE RESISTORS
POWER TRANSFORMER IS DIFFERENT ACCORDING TO AREA

AP-Q55/C SCHEMATIC DIAGRAM

NO. 1620661A

001177