Deze download wordt u aangeboden door **Pick-upnaalden.nl**
Fazantendreef 17-19
8251 JR Dronten
T: 0321 769022
E: info@pick-upnaalden.nl
W: www.pickupnaalden.com
W: www.pickupnaald.com

Facebook: www.facebook.com/pickupnaalden
Twitter: twitter.com/Pickupnaalden
Google+ : plus.google.com/114738445546162436900

DENON

Hi Fi Component/Record Player

SERVICE MANUAL

SERVO-CONTROLLED DIRECT DRIVE RECORD PLAYER

MODEL DP-60L

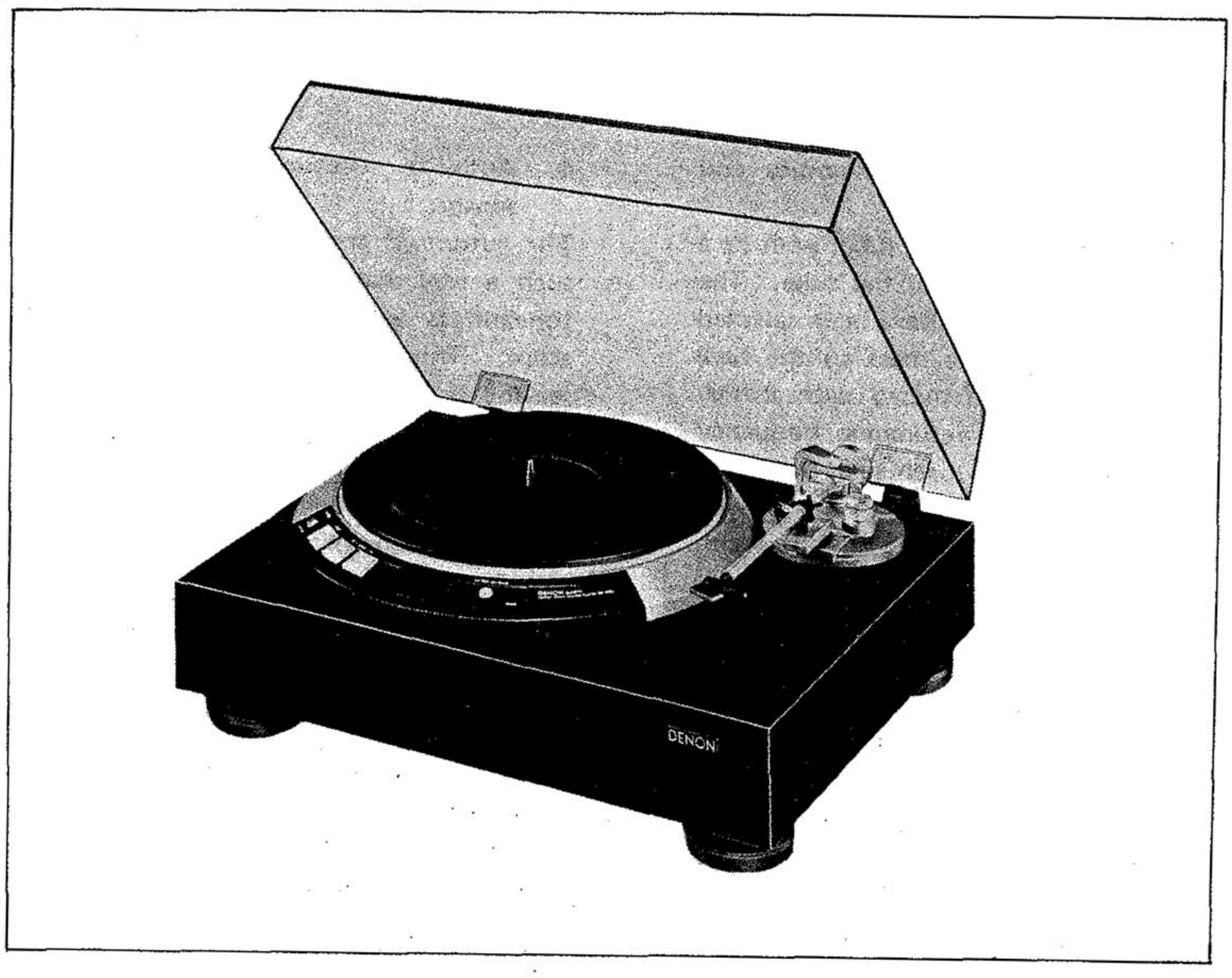

Model DP-60L

NIPPON COLUMBIA CO., LTD.

TABLE OF CONTENTS

FEATURES 1
NAMES OF PARTS AND FUNCTION 2
ADJUSTMENT 3
TO CHANGE THE OPERATIONAL VOLTAGES 4
PARTS LIST OF KU-385 MOTOR SERVO AMP UNIT 5
PARTS LIST OF KU-356 ARM SERVO AMP UNIT 6
PARTS LIST OF KU-390 SWITCH UNIT 6
PARTS LIST OF PS-152 AND PS-155 FUSE UNITS 6
PARTS LIST OF PS-149 AND PS-153 POWER UNITS 6
LEAD CONNECTION OF SEMICONDUCTORS 7
EXPLODED VIEW OF TONEARM 8
PACKING INSTRUCTION 8
CIRCUIT DIAGRAM 9
PRINTED CIRCUIT BOARD 10
EXPLODED VIEW OF MAIN PARTS 11
PARTS LIST OF EXPLODED VIEW 12
MAIN SPECIFICATIONS 13

FEATURES

1. Low mass type tonearm improves trackability and fidelity.

The head shell is integrated into the arm tube, with its a connector portion located at the base of the tube. The construction materials for this tonearm have been selected very carefully to reduce the effective mass to the bare minimum. As a result, even when mated with a high compliance cartridge, the low end resonance frequency (f_0) does not become too low but remains optimum. Clearer sound is achieved since the effects of record warpage and rotational excentricity are eliminated along with intermodulation distortion.

Since a straight shaped tonearm is almost symmetrical from side to side, dimensional or mechanical accuracies are improved. This design eliminates dimensional error or tortional distortion, making higher fidelity reproduction possible.

2. Replaceable S-shaped arm tube with standard 4P connector.

By replacing the low mass arm tube with the S-shape arm tube, the virtually all head shells or integrated cartridges/head shells can be utilized on the DP-60L. By having the ability to use the widest selection of cartridges, your audio enjoyment will be significantly broadened.

3. Magnetic recording speed detection system.

The turntable platter speed of the DP-60L is detected by **DENON**'s magnetic recording detection system. The detection frequency is high enough (1000 pulses per rotation) to allow ultra fast response of the servo loop. Overshoot and wow and flutter are virtually eliminated.

4. Auto-lift mechanism with non-contact record-end sensor.

The automatic arm lift (auto-lift) mechanism functions in such a way that when a record playback is finished, the tonearm is automatically lifted and the platter rotation stops. This eliminates the possibility of stylus wear by leaving it tracking the lead out record grooves. At the end of play, a non-contact record-end sensor senses the velocity change of the tonearm with an opto-electronic transducer, eliminating unnecessary load on the record or stylus. Sound quality is totally unaffected by this system.

5. Angular control motor lifts tonearm.

The arm lifting device employs a servo-controlled angular control motor developed by **DENON**, for ultra-smooth and silent up and down motion.

6. PLL servo control via a quarts crystal oscillator guarantees speed accuracy of below 0.002%, and is almost totally immune to variation of temperature, humidity, load condition or supply voltage fluctuation.

7. The combination of Bi-directional servo control and electronic braking, together with rotational detection offers the quickest, smoothest start, stop and speed change-over.

8. Counterweight shaft is damped effectively to supress partial resonance of tonearm body.

9. The turntable mat was developed through vibration analysis through laser holography.

NAMES OF PARTS AND FUNCTION

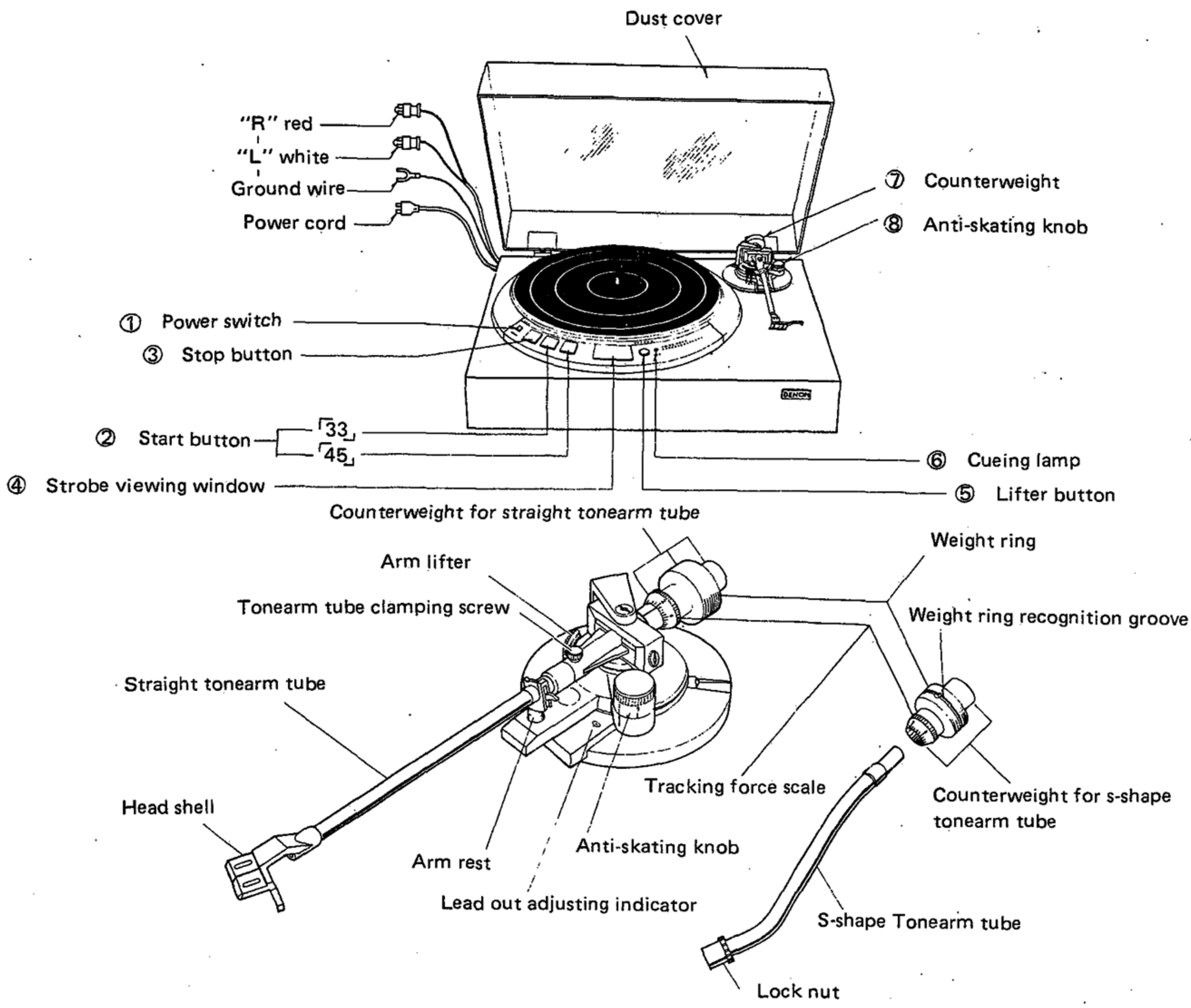

① Power switch

The power is turned on when the switch is pressed in (▬). The lamps in the stop button and in the strobe viewing window will light. When pressed again (▙), the power is turned off and lamps also turn off.
If the power switch is turned on (▬) while the arm lifter is down, the arm lifter will lift.

② Start buttons

Press

33 for a 33-1/3 rpm record, and
45 for a 45 rpm. record.

When one of the buttons is pressed, the lamp in the button lights and the platter starts rotation. Simultaneously, the arm lifter lowers.

③ Stop button

When this button is pressed, the arm lifter lifts and then, after a few moments, the lamp in either the "33" or "45" buttons turns off. The lamp in the stop button will then light and the platter will stop.

NOTE 1:

The reason why the stop button lamp lights only after a brief delay is as follows. When the stop button is pressed, the arm lifter starts lifting immediately. However, since there is a small gap between the arm lifter and the arm tube, a time lag exists until the stylus leaves the disc. This record player is designed so that normal speed is maintained during this period before the platter stops.

NOTE 2:

If the start button is pressed right after the stop button is pressed, the lamp in the stop button may light and the platter will stop. Therefore, when changing speed during rotation, it is advisable to press the start button of either "33" or "45" directly without pressing the stop button.

④ Strobe viewing window

When the platter is rotating at a specified speed, the strobe pattern observed through this window should appear to be standing still.

⑤ Lifter button

Each time this button is pressed, the arm lifter moves up and down.

⑥ Cueing lamp

This lamp lights while the arm lifter is down.

⑦ Counterweight

Turning this weight adjusts the traking force.

⑧ Anti-skating knob

By adjusting this knob, a force is applied towards the outside of the disc at the stylus tip.

ADJUSTMENT

1. **Adjustment of spacing between detection head and platter:**
   Adjust the spacing so that it may represent abt. 0.15 mm between the magnet-coated surface of platter and detection head. Depending upon the degree of the spacing, the condition of stop will vary. Consequently, adjustment should be made in such a way that the platter without the turntable sheet on glides slightly forward when stopping.

NOTE:

When the magnetic head is replaced, make sure that the terminal connection is as shown in the figure below. Otherwise, the platter may turn reversely.

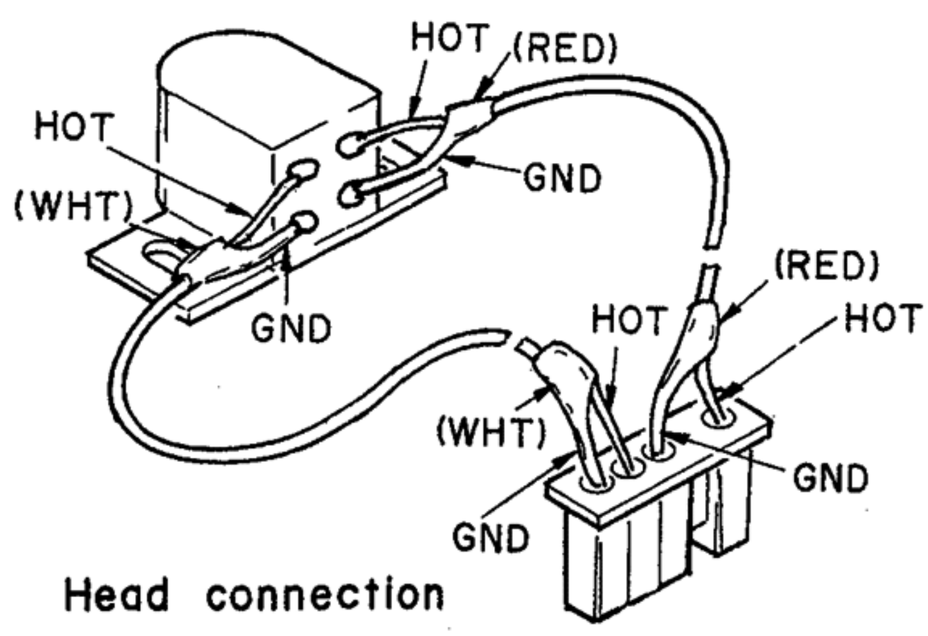

Head connection

2. **Confirming the regulator voltage:**
   Since the power source employs a fixed voltage 3-terminal IC, confirm that the output voltage of IC5 and represents 5V±0.2V. (No adjustment is feasible.)

3. **RPM Adjustment:**
   (1) Pull out the lead wire through test points 39 and 41 (3P connecting pin) on motor servo P.C. Board KU-385 and connect 39 to positive side of the oscilloscope while 41, earth side.
   (2) Adjust the speed to 45 RPM; observing the waveform by means of an oscilloscope, Adjust VR2 so that the pulse may occur at the 40% position from the left of the pulse side of the half-cycle in a cycle of a square wave as shown in the figures below.
   (3) Subsequently adjust VR1 for 33 RPM in the same manner as in the case of 45 RPM so that the pulse may be positioned at 40% of the square wave cycle.

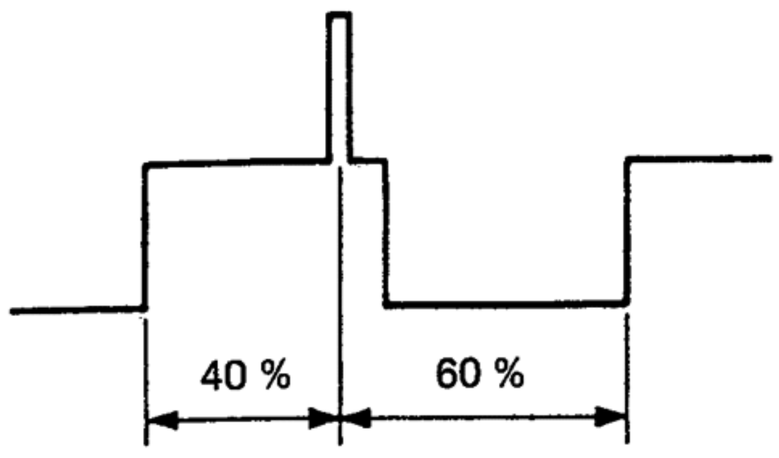

(Reference)
Following are the waveforms of test points 39–40 and 41–40: (Test Point 40 is grownd.)

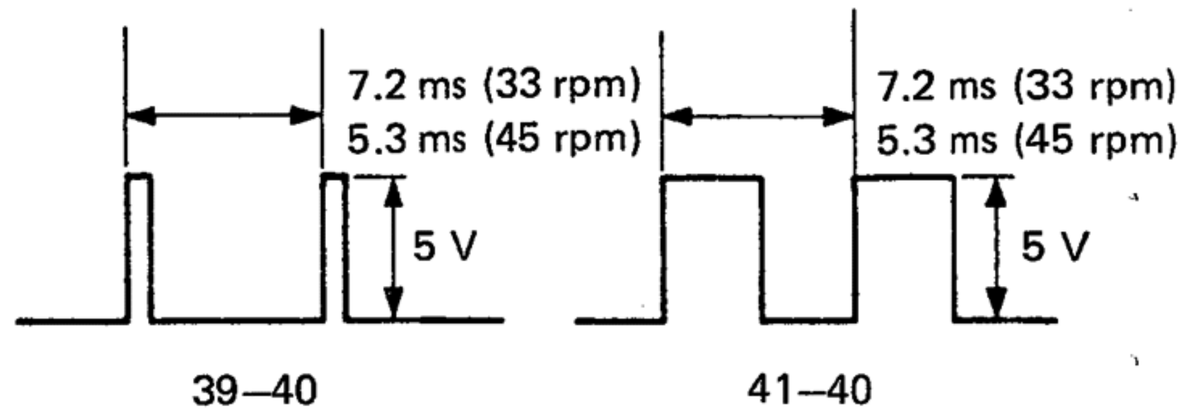

4. **Arm lifter height adjustment:**
   Arm lifter is so designed as to move upward and downward together with the arm when its height is adjusted. Although the adjustment is carried out in the plant before shipment, if re-adjustment is required, the height can be re-adjusted in the following manner:
   (1) Loosen the arm lifter height adjusting screws Depress lifter button to light the cueing lamp and lower the arm lifter.
   (2) Place the stylus point on the record surface and adjust the clearance between the arm lifter and arm tube to be 0.5~1.0 mm by moving the arm lifter vertically, and then tighten the height adjusting screw.

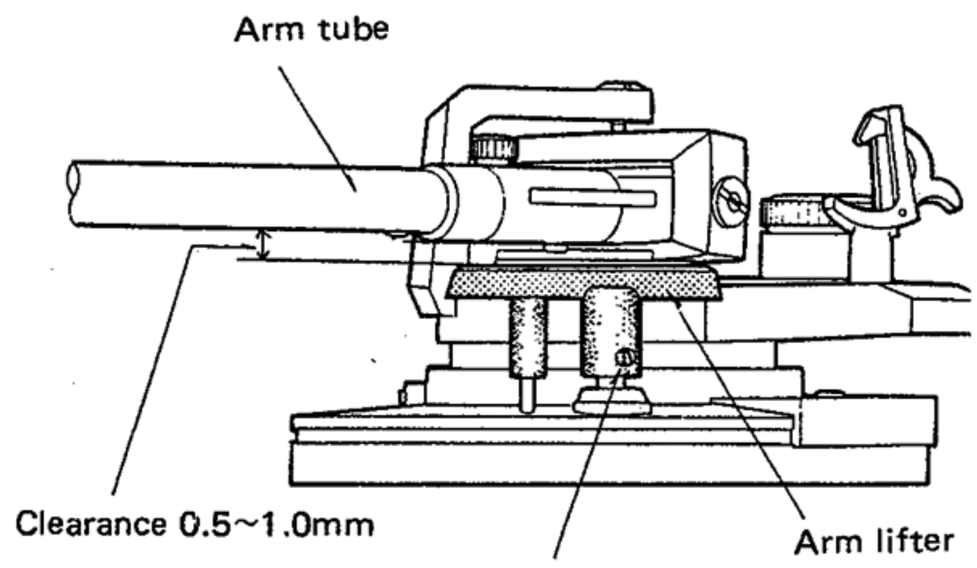

Arm lifter height adjusting screw

5. **End adjustment (lead-out adjustment):**
   The end adjustment has been carried out in the plant prior to shipment with respect to the straight arm tube. If, however, re-adjustment is required, adjust in the following manner:
   (1) Turn the anti-skating knob to '0'.
   (2) Confirm that the cueing lamp is off. If it is lit, depress the lifter button so that the arm lifter is kept up.
   (3) Set the cartridge stylus point to position 53 mm from the motor shaft by the use of accessory overhang gauge.
   (4) Turn the lead-out adjusting screw with a screwdriver so as to allow the lead-out adjusting indicator to light.

NOTE 1.

If the auto-lift operates normally, there is no necessity for re-adjustment even if the lead-out adjusting indicator fails to light when the stylus point is set in a 53 mm position from the motor shaft.

NOTE 2.

Although the lead-out adjusting indicator may light on or off immediately before the end of the 17 cm disc performance, there is no drawback as regards the mechanical performance since the stylus point has approached the 53mm area.

6. **Offset Adjustment:**
(Adjust when IC1 (KU-356) is replaced.)
(1) Make a short circuit between the both ends of R46 of arm servo P.C. board KU-356, between TR6 base and earth, and between TR9 base and earth.
(2) Adjust VR1 so that the d.c. voltage at terminal 14 of IC1 may represent 1.4±0.1V.

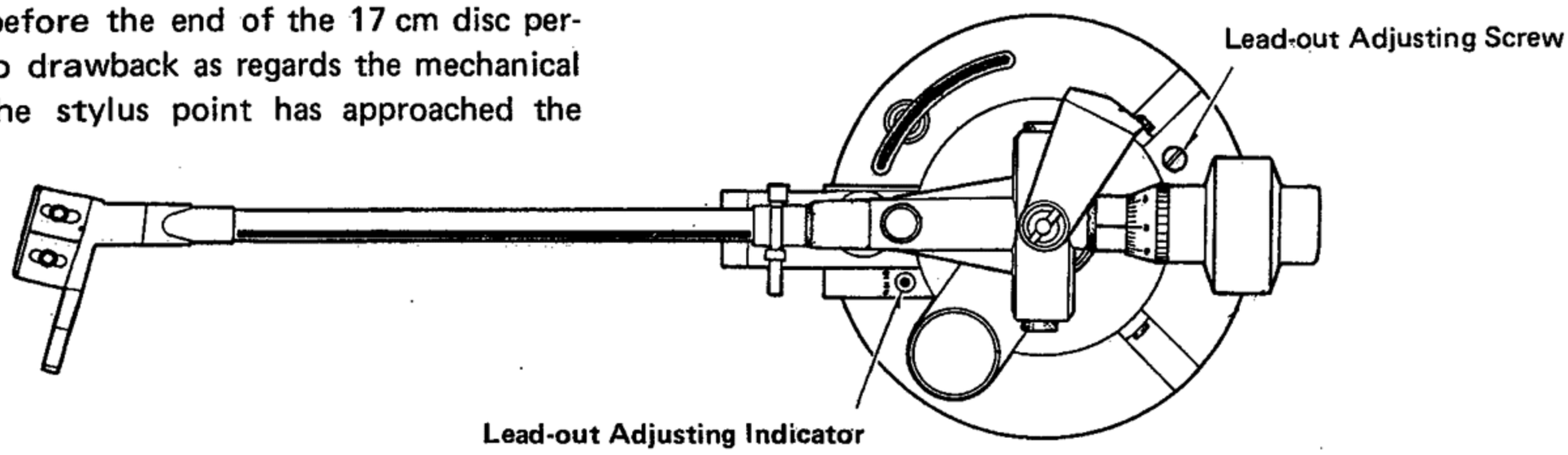

TO CHANGE THE OPERATIONAL VOLTAGES

A. Model whose voltage selector is accessible by the user: (Multi-voltage model)

This equipment has been preset for a line voltage of 220V. Before inserting the power plug, please check if this voltage corresponds with the line voltage in your area. If it does not, be sure to adjust the voltage selector switch to the proper setting before operating this equipment. The voltage selector switch is located on the base surface below the turntable platter. Simply insert a screw driver into the voltage selector switch and turn it in either direction so that the desired voltage marked on the switch is positioned in the window.
Damage of equipment because of missetting of voltage selector is not within the limit of **DENON** liability.

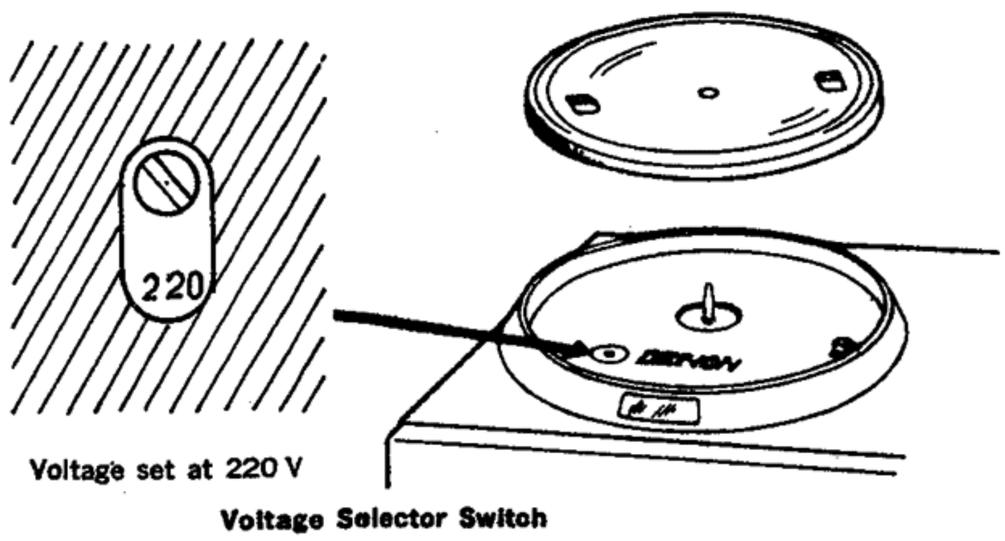

Set the voltage selector in accordance with the nominal power supply voltage as shown in the table.

ACTUAL (nominal) VOLTAGE (volt)	VOLTAGE SETTING
110 115 120	120
200	200
210 220	220
230 240	240

B. Models whose voltage selector is not accessible by the user: (Australian, UK and Canadian models)

1 **Australian and UK models**
Although these models are provided with the voltage selector being preset to 240V, it cannot be operated by the user since it is blinded by the shield cover. However, in case the change of voltage setting is necessary, insert a screw driver into the voltage selector and turn it in either direction so that the desired voltage indicated on the selector is positioned at the cut-out marking as shown in figure below.

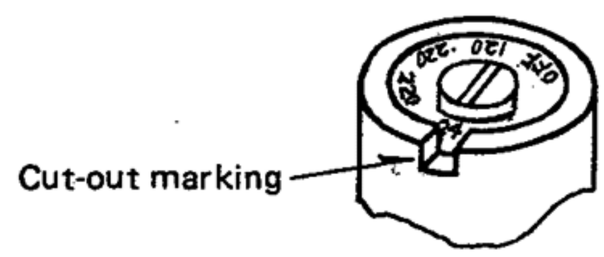

2 **Canadian model**
Although this model is provided with the voltage selector being preset to 120V, it cannot be operated by the user since it is blinded by the shield cover.
Since the Canadian model must comply with the CSA standards, the components directly connected to the power line are CSA recognized having 125VAC rating. Therefore, DO NOT change the voltage setting.

PARTS LIST

KU-385 MOTOR SERVO AMP UNIT

Ref. No.	Part. No.	Part Name	Remark
SEMI CONDUCTOR GROUP			
IC3	2620186001	SC3120A	
IC4	2630075005	HA17902P	
IC1, 2	2630094028	TA7122BP (C)	
IC5	2680009005	FS-7805M	
IC7	2620089001	HD7426P	
⚠ TR7, 12	2710100010	2SA879 ◎ (R)	
TR8, 11, 15	2710113007	2SA999 (F)	
TR17	2720025004	2SB562 (C)	
TR16, 18	2720046009	2SB561 (C)	
TR1~6, 14	2730021043	2SC458 (D)	
⚠ TR10, 13	2730196004	2SC2023 (Z)	
TR19	2730111021	2SC1213 (C)	
⚠ D24, 27	2760280003	RB154	
⚠ D23, 26	2760057029	V06E	
D1~22, 41~44	2760049008	1S2076	
D29~32	2760291005	V06A	
D45	2760002003	1N60	
D37~40	3939041001	LN81RP (HL)	LED
RESISTOR GROUP			
			Carbon film
R67, 69	2410266005	RD14B2E100J	10ΩJ ¼W
R105	2410270004	RD14B2E150J	15ΩJ ¼W
R101, 102	2410280007	RD14B2E390J	39ΩJ ¼W
R66, 77	2410286001	RD14B2E680J	68ΩJ ¼W
R68,78,106	2410290000	RD14B2E101J	100ΩJ ¼W
R85	2410300000	RD14B2E271J	270ΩJ ¼W
R72	2410302008	RD14B2E331J	330ΩJ ¼W
R92~94	2410304006	RD14B2E391J	390ΩJ ¼W
R86	2410306004	RD14B2E471J	470ΩJ ¼W
R5, 13	2410308002	RD14B2E561J	560ΩJ ¼W
R88	2410314009	RD14B2E102J	1KΩJ ¼W
R82~84	2410318005	RD14B2E152J	1.5KΩJ ¼W
R18, 25, 32, 41, 42, 64, 76, 79, 80,	2410322004	RD14B2E222J	2.2KΩJ ¼W
R19, 23, 24, 28, 70, 71	2410326005	RD14B2E332J	3.3KΩJ ¼W
R20, 45, 48, 51	2410328008	RD14B2E392J	3.9KΩJ ¼W
R1, 9, 54, 58, 89, 90, 91	2410330009	RD14B2E472J	4.7KΩJ ¼W
R6, 14	2410332007	RD14B2E562J	5.6KΩJ ¼W
R22	2410334005	RD14B2E682J	6.8KΩJ ¼W
R26, 39, 43, 46, 47, 49, 50, 52, 53, 55, 65, 75	2410338001	RD14B2E103J	10KΩJ ¼W
R95, 96	2410342000	RD14B2E153J	15KΩJ ¼W
R27	2410344008	RD14B2E183J	18KΩJ ¼W
R29, 35, 37,	2410346006	RD14B2E223J	22KΩJ ¼W
R2, 7, 10, 15, 38, 103, 104	2410354001	RD14B2E473J	47KΩJ ¼W
R3, 11, 33, 34, 40	2410362006	RD14B2E104J	100KΩJ ¼W
R36, 87	2410366002	RD14B2E154J	150KΩJ ¼W
R56	2410370001	RD14B2E224J	220KΩJ ¼W
R4, 12, 57	2410378003	RD14B2E474J	470KΩJ ¼W
R21	2410759004	RD14B2E564J	560KΩJ ¼W

Ref. No.	Part. No.	Part Name	Remark
R62	2410761005	RD14B2E684J	680KΩJ ¼W
R63, 73	2410765001	RD14B2E105J	1MΩJ ¼W
			Metal film
R60	2452180000	RN14K2E821F	820ΩF ¼W
R97	2452199004	RN14K2E472F	4.7KΩF ¼W
R98	2452214002	RN14K2E203F	20KΩF ¼W
R61	2452221008	RN14K2E393F	39KΩF ¼W
R59	2452225004	RN14K2E563F	56KΩF ¼W
			Metal oxide
⚠ R74, 81	2440005029	RS14B3A010JNBF	1ΩJ 1W
			Variable resistor
VR1, 2	EP-5462-13	SOLID VOLUME	10KΩB
CAPACITOR GROUP			
			Electrolitic
C2, 7, 45	2544009002	CE04W1A470=	47μF 10V
C4, 5, 9, 10, 17	2544015009	CE04W1C100=	10μF 16V
C28	2544054002	CE04W1C220=	22μF 16V
C27, 29	2544018006	CE04W1C101=	100μF 16V
C31	2544086009	CE04W1E222=	2.200μF 25V
C1, 6, 22, 46	2544043000	CE04W1HR47=	0.47μF 50V
C25, 26	2544044009	CE04W1H010=	1μF 50V
			Film
C18	2551062003	CQ93M1H152K	0.0015μF 50V
C50	2551064001	CQ93M1H222K	0.0022μF 50V
C14, 15	2551070008	CQ93M1H682K	0.0068μF 50V
C16	2551121038	CQ93M1H123K	0.012μF 50V
C40, 41	2551076002	CQ93M1H223K	0.022μF 50V
C13	2551122011	CQ93M1H563J	0.056μF 50V
C19	2551084007	CQ93M1H104K	0.1μF 50V
			Ceramic
C20,21,48,49	2531004007	CK45B1H102K	0.001μF 50V
C42~43	2531009002	CK45B1H682K	0.0068μF 50V
C23, 24	2531024003	CK45F1H103Z	0.01μF 50V
C30,	2531027000	CK45F1H104Z	0.1μF 50V
C11, 12	2533619005	CC45SL1H470J	47PF 50V
			Metalized Film
⚠ C35	2568013029	CF99=2DAC305J	3μF AC200V
OTHER PARTS GROUP			
	2228179203	SERVO AMP P.C.B	
	4178020400	HEAT SINK	
	4178050001	HEAT SINK	FS-7805M
⚠ SK2	FEP0429K	SPARK KILLER	
	2618007008	CRYSTAL	9MHz
	2050087026	2P WRAPPING TERMINAL	TRANS Pri.
	2050082047	4P WRAPPING TERMINAL	MAIN P.C.B ↔ S.W P.C.B
	2058010008	6P WRAPPING TERMINAL	33/45, STOP LAMP
	2035622008	3P MINI CONNE PIN	TEST POINT
	FEP12802	3P MINI CONNE PIN	MOTOR
	FEP12803	4P MINI CONNE PIN	HEAD

⚠ WARNING: Shaded parts are important to SAFETY. Replace always with same type, same rating.

PARTS LIST

KU-356 ARM SERVO AMP UNIT

Ref. No.	Part No.	Part Name	Remarks
SEMI CONDUCTOR GROUP			
IC1, 2	2630076004	HA17901P	
TR11	2710141008	2SA768	
TR7, 8	2720046009	2SB561 (C)	
TR1~6	2730021043	2SC458 (D)	
TR9, 10	2740038000	2SD467 (C)	
D1~4, 6~9, 12~15 17, 19	2760049008	1S2076	
D18	2760218017	HZ-9A-2	
D16	3939079002	LN322GP	LED
D5	3939023003	SEL101W	LED
	3939019101	CDS	
RESISTOR GROUP			
			Carbon film
R65, 66	2412036000	RD14B2E4R7J	4.7ΩJ ¼W
R46	2412038008	RD14B2E5R6J	5.6ΩJ ¼W
R24, 47	2412052000	RD14B2E220J	22ΩJ ¼W
R60, 61, 64	2412056006	RD14B2E330J	33ΩJ ¼W
R5, 70	2412068007	RD14B2E101J	100ΩJ ¼W
R1, 19	2412074004	RD14B2E181J	180ΩJ ¼W
R41, 69, 71	2412078000	RD14B2E271J	270ΩJ ¼W
R23	2412084007	RD14B2E471J	470ΩJ ¼W
R62, 63	2412088003	RD14B2E681J	680ΩJ ¼W
R4, 6, 14, 27, 40, 42, 53, 59	2412092002	RD14B2E102J	1KΩJ ¼W
R48	2412096008	RD14B2E152J	1.5KΩJ ¼W
R3, 28, 68	2412100004	RD14B2E222J	2.2KΩJ ¼W
R50~52, 56	2412102002	RD14B2E272J	2.7KΩJ ¼W
R9, 45	2412108006	RD14B2E472J	4.7KΩJ ¼W
R8, 32~34, 29, 38, 39	2412116001	RD14B2E103J	10KΩJ ¼W
R16, 17, 26 31, 35, 37, 55, 58	2412124006	RD14B2E223J	22KΩJ ¼W
R2, 15	2412128002	RD14B2E333J	33KΩJ ¼W
R67	2412132001	RD14B2E473J	47KΩJ ¼W
R11, 12	2412140006	RD14B2E104J	100KΩJ ¼W
R43, 44	2412142004	RD14B2E124J	120KΩJ ¼W
R7	2412146000	RD14B2E184J	180KΩJ ¼W
R13	2412148008	RD14B2E224J	220KΩJ ¼W
R25, 49	2412152007	RD14B2E334J	330KΩJ ¼W
R10, 30 36, 54, 57	2412164008	RD14B2E105J	1MΩJ ¼W
			Metal film
R20	2452191002	RN14K2E222F	2.2KΩf ¼W
R18	2452202001	RN14K2E622F	6.2KΩF ¼W
			Variable Resistor
VR1	2116000015	V08PB103	10KΩB
CAPACITOR GROUP			
			Electrolitic
C12	2544003008	CE04W0J101	100μF 6.3V
C11	2544006005	CE04W0J471	470μF 6.3V
C21	2544009002	CE04W1A470 =	47μF 10V
C8	2544010004	CE04W1A101 =	100μF 10V
C4	2549017002	CE04=1C100=	10μF 16V
C2, 5 15, 16	2544043000	CE04W1HR47=	0.47μF 50V
C1, 19	2543014043	CE04D1C220MBP	22μF 16V
			Tantalum
C17, 18	2541003001	CS45E0J100M	10μF 6.3V
			Ceramic
C6, 7, 20	2531026001	CK45F1H473Z	0.047μF 50V
C3, 9, 10 13, 14	2531027000	CK45F1H104Z	0.1μF 50V
OTHER PARTS GROUP			
	2228272100	ARM SERVO AMP P.C.B	
	2129059008	PUSH SWITCH	LIFTER UP/Down

KU-390 SWITCH UNIT

Ref. No.	Part No.	Part Name	Remarks
	2228265007	SWITCH P.C. BOARD	
	2129059008	PUSH SWITCH	
	3930047033	PILOT LAMP	GREEN
	3930047046	PILOT LAMP	WHITE

PS-152 FUSE UNIT

Ref. No.	Part No.	Part Name	Remarks
	2228374105	FUSE P.C.B.	
	FEP1287	FUSE HOLDER	
⚠	2061015029	FUSE	1A 250V

PS-155 FUSE UNIT (Canadian model only)

Ref. No.	Part No.	Part Name	Remarks
	2228374105	FUSE P.C.B.	
⚠	EP-72663	FUSE	1A 250V

PS-149 POWER UNIT

Ref. No.	Part No.	Part Name	Remarks
RESISTOR GROUP			
R4	2410163001	RD14B2H121J	120ΩJ ½W
CAPACITOR GROUP			
⚠ C2, 3	2518001023	CP05C= =AC473MC	0.047μF 450VAC
OTHER PARTS GROUP			
⚠	2228356000	POWER SUPPLY P.C.B	
⚠	2398001007	LINE FILTER COIL	
⚠	2061036008	FUSE	630mA/250V
⚠	FEP1287	FUSE HOLDER	

PS-153 POWER UNIT (Canadian model only)

Ref. No.	Part No.	Part Name	Remarks
RESISTOR GROUP			Carbon film
R4	2410163001	RD14B2H121J	120ΩJ ½W
CAPACITOR GROUP			
⚠ C2,3	2568019010	CF93B2BAC473M	0.047μF 125VAC
OTHER			
⚠	2228356000	POWER SUPPLY P.C.B.	
⚠	2398001007	LINE FILTER COIL	
⚠	EP-72661	FUSE	630mA/250V

LEAD CONNECTION OF SEMICONDUCTORS

IC

TA-7122 BP

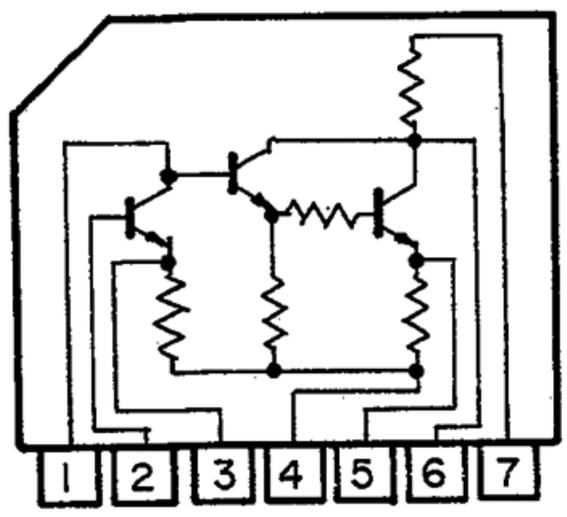

SC3120A

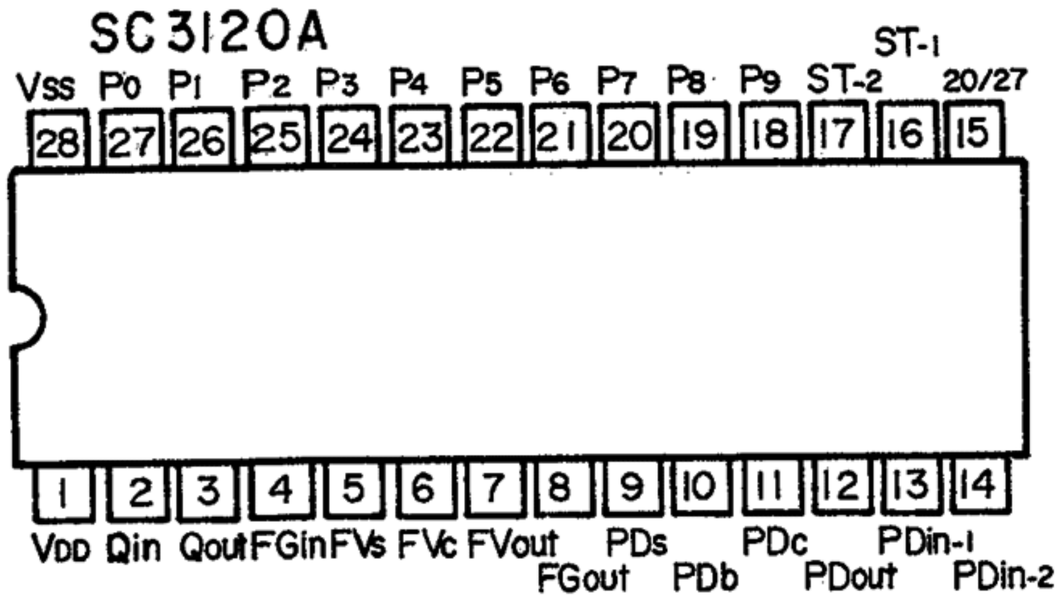

HA17902

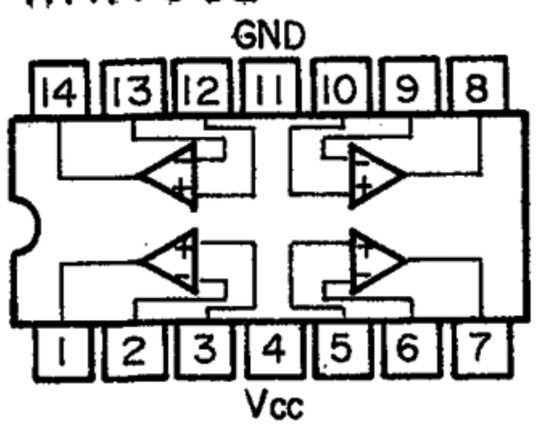

HD7426P

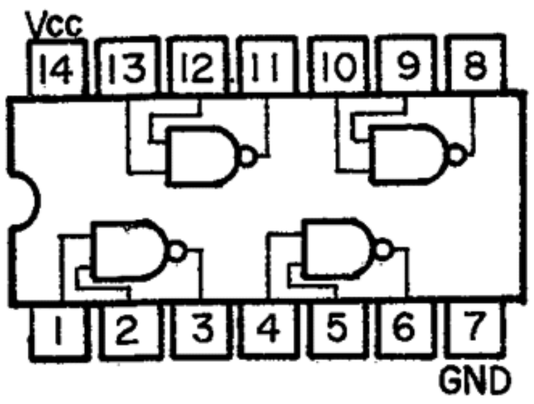

HA17901P

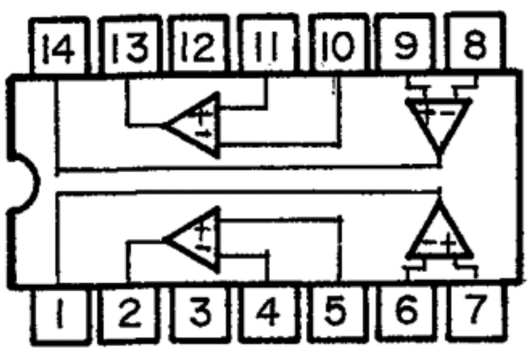

FS-7805M

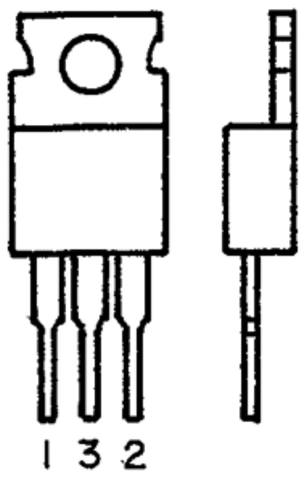

1 = INPUT
2 = OUTPUT
3 = COMMON

TR

2SA879(R)Ⓒ
2SA999(F)
2SB561(C)
2SB562(C)
2SD467(C)

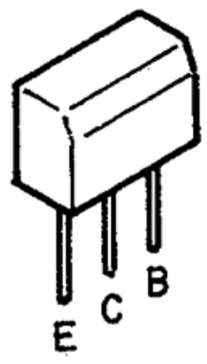

2SC485(D)
2SC1213(C)

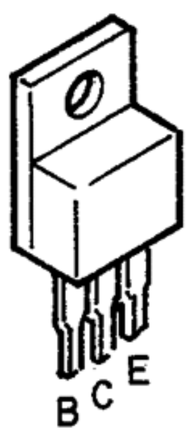

2SA768
2SC2023 Z

D

LN81RP (HL)

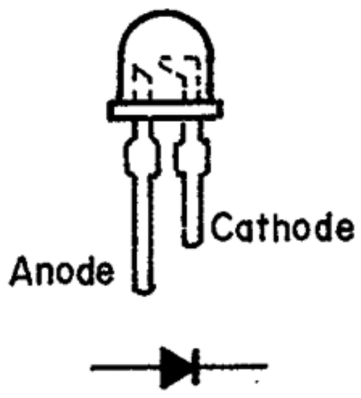

LN222RP
LN322GP

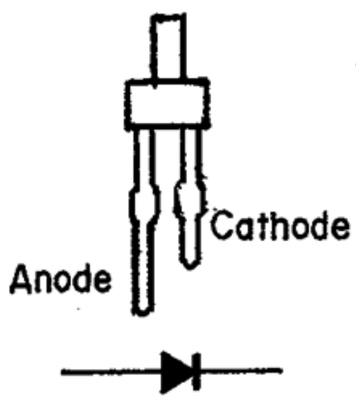

SEL101W

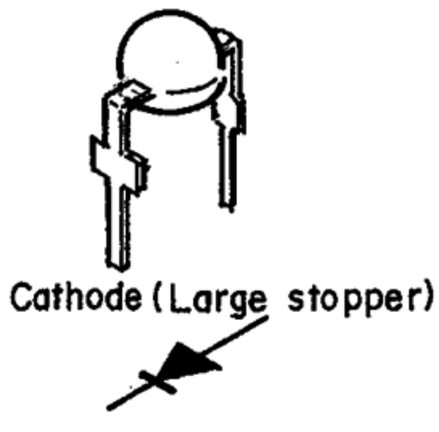

IN60 (Red)
IS2076 (Light Blue)

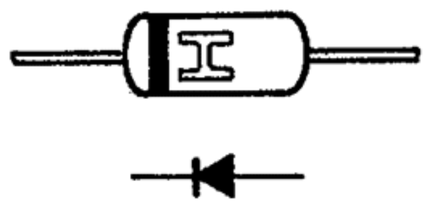

HZ-9A-2

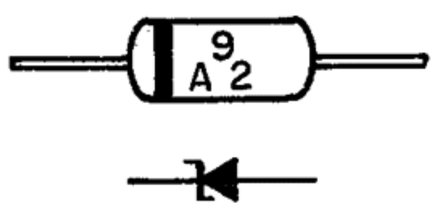

V06A (Violet)
V06B (Blue)

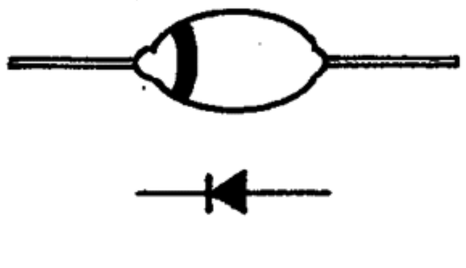

RB154

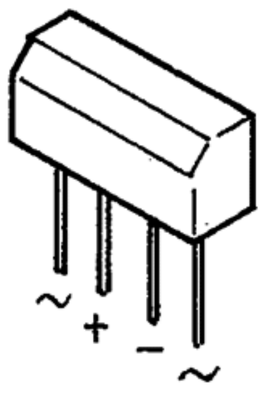

EXPLODED VIEW OF TONEARM

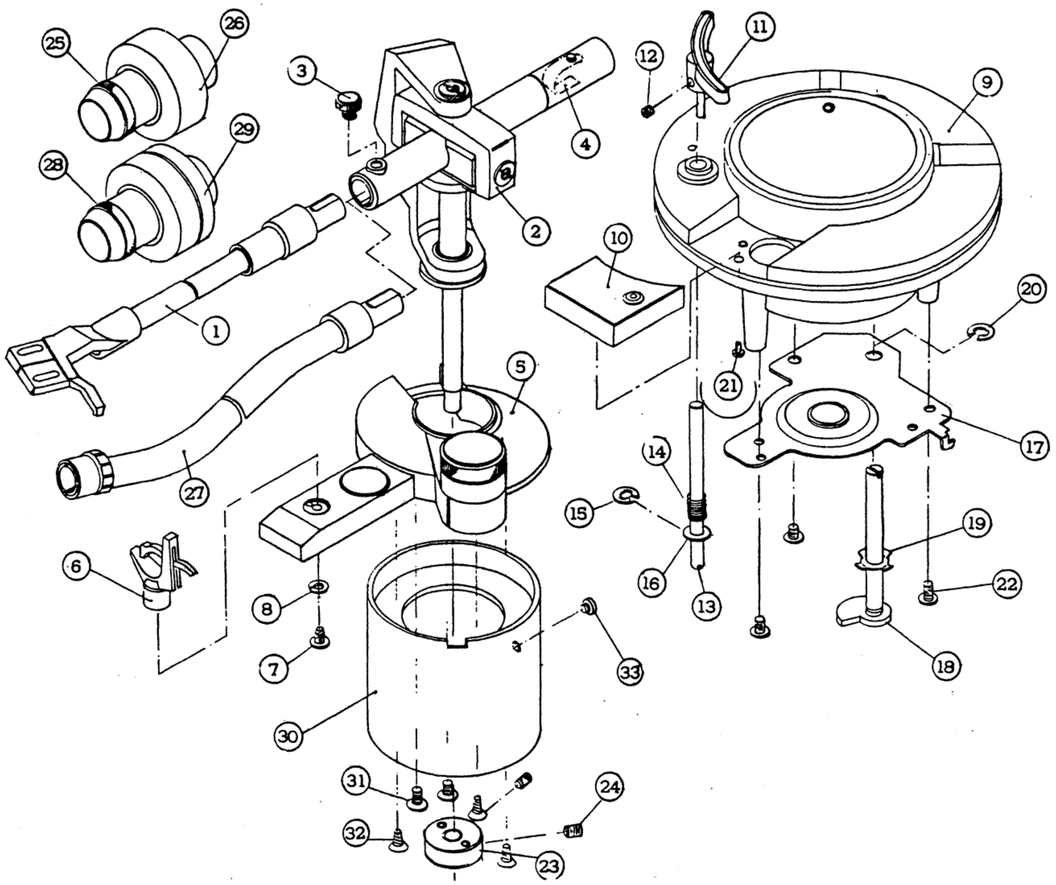

Ref. No.	Part No.	Part Name	Ref No.	Part No.	Part Name
1	3158389007	PIPE ARM ASS.	18	4248011103	ADJUST CAM ASS'Y
2	3158429006	MAIN BODY ASS.	19	3158451003	FRICTION WASHER
3	3158395004	FINGER SCREW	20	4761004008	4E RING
4	3158526006	GUIDE PIN ASS.	21	4740153016	2x6 CPTS
5	3158422100	HOUSING ASS.	22	4713303016	3x6 CBS
6	3158410109	ARM REST ASS.	23	3158162101	SHAFT RING
7	4730304030	3x8 TAP SCREW	24	4744203017	3x6 BSS(A)
8	4752003005	3SW	25	3158402104	WEIGHT SLEEVE ASS.
9	3158532003	ARM BASE SUB ASS.	26	3158530005	WEIGHT RING ASS.
10	3158427105	L.E.D. COVER	27	3158414105	PIPE ARM ASS.
11	3158063132	LIFTER ARM ASS.	28	3158417102	WEIGHT SLEEVE ASS.
12	4744003013	3x3 SS(A)	29	3158531004	WEIGHT RING ASS.
13	3158428007	LIFTER SHAFT	30	3158424108	SHAFT CASE
14	4638065109	LIFTER SPRING	31	4712303017	3x6 CFS
15	4761003009	3E RING	32	4712304016	3x8 CFS
16	4751005004	4W	33	4770132000	2.6x2 SPECIAL SCREW
17	4128215100	SENSER BASE ASS'Y			

For a smooth function of the automatic arm lift of this model, a special grease (SILICONE GREASE G-31) is applied at the lifter shaft/cylinder bearing.
In case of servicing this part, re-apply the SILICONE GREASE G-31 after cleaning the lifter shaft and inside of the cylinder.
After assembly, move the lifter shaft up and down until the movement thereof becomes smooth. Then make sure the lifter shaft falls by its own weight.

PACKING INSTRUCTION

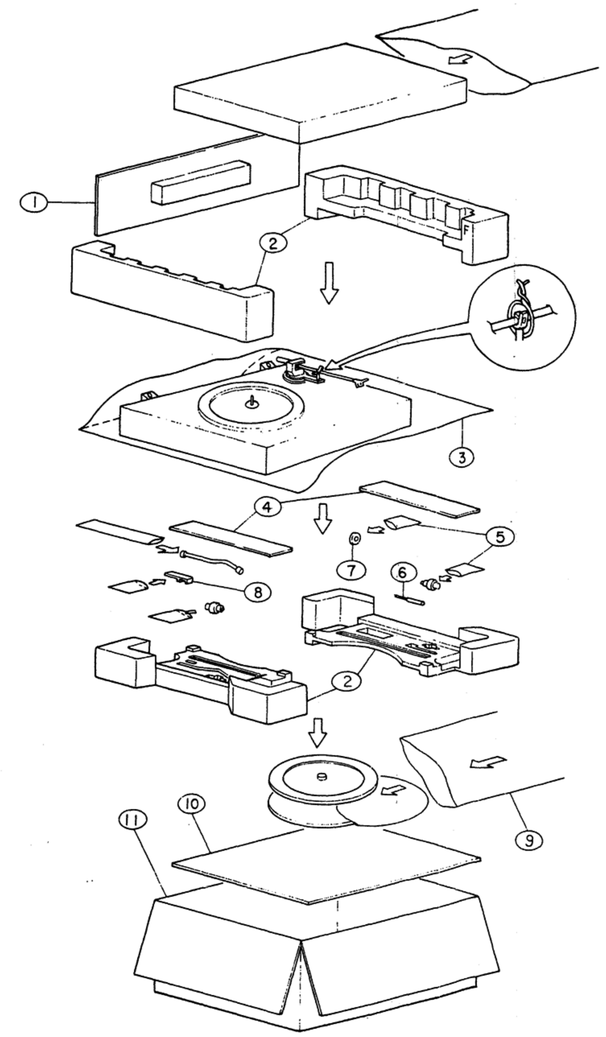

Ref. No.	Part No.	Part Name
1	5028012105	REAR PACKING ASS'Y
2	5058093103	PACKING ASS'Y
3	5058092007	LAMINATE ENVELOPE
4	5028010103	ACCESSORIES COVER
5	5058006006	ENVELOPE
6	5298006002	45 ADAPTOR
7	5298004004	MINI DRIVER
8	5298017208	ADJ. GAUGE
9	5058023018	ENVELOPE
10	5028011106	BOTTOM PLATE
11	5018159100	CARTON CASE

CIRCUIT DIAGRAM

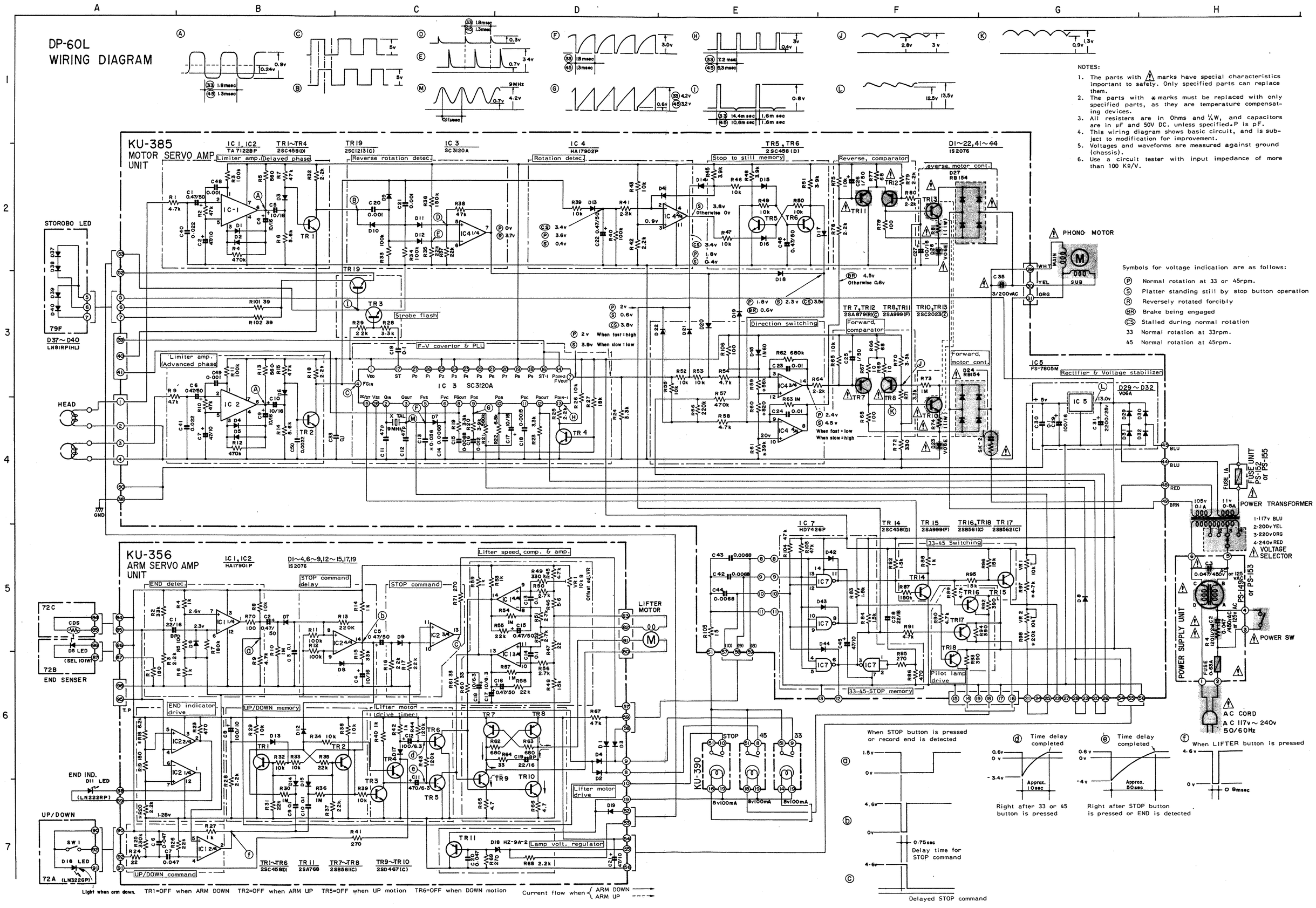

NOTES:

1. The parts with ⚠ marks have special characteristics important to safety. Only specified parts can replace them.
2. The parts with ＊ marks must be replaced with only specified parts, as they are temperature compensating devices.
3. All resisters are in Ohms and ¼W, and capacitors are in μF and 50V DC. unless specified. P is pF.
4. This wiring diagram shows basic circuit, and is subject to modification for improvement.
5. Voltages and waveforms are measured against ground (chassis).
6. Use a circuit tester with input impedance of more than 100 KΩ/V.

Symbols for voltage indication are as follows:

- (P) Normal rotation at 33 or 45rpm.
- (S) Platter standing still by stop button operation
- (R) Reversely rotated forcibly
- (BR) Brake being engaged
- (CS) Stalled during normal rotation
- 33 Normal rotation at 33rpm.
- 45 Normal rotation at 45rpm.

PRINTED CIRCUIT BOARD

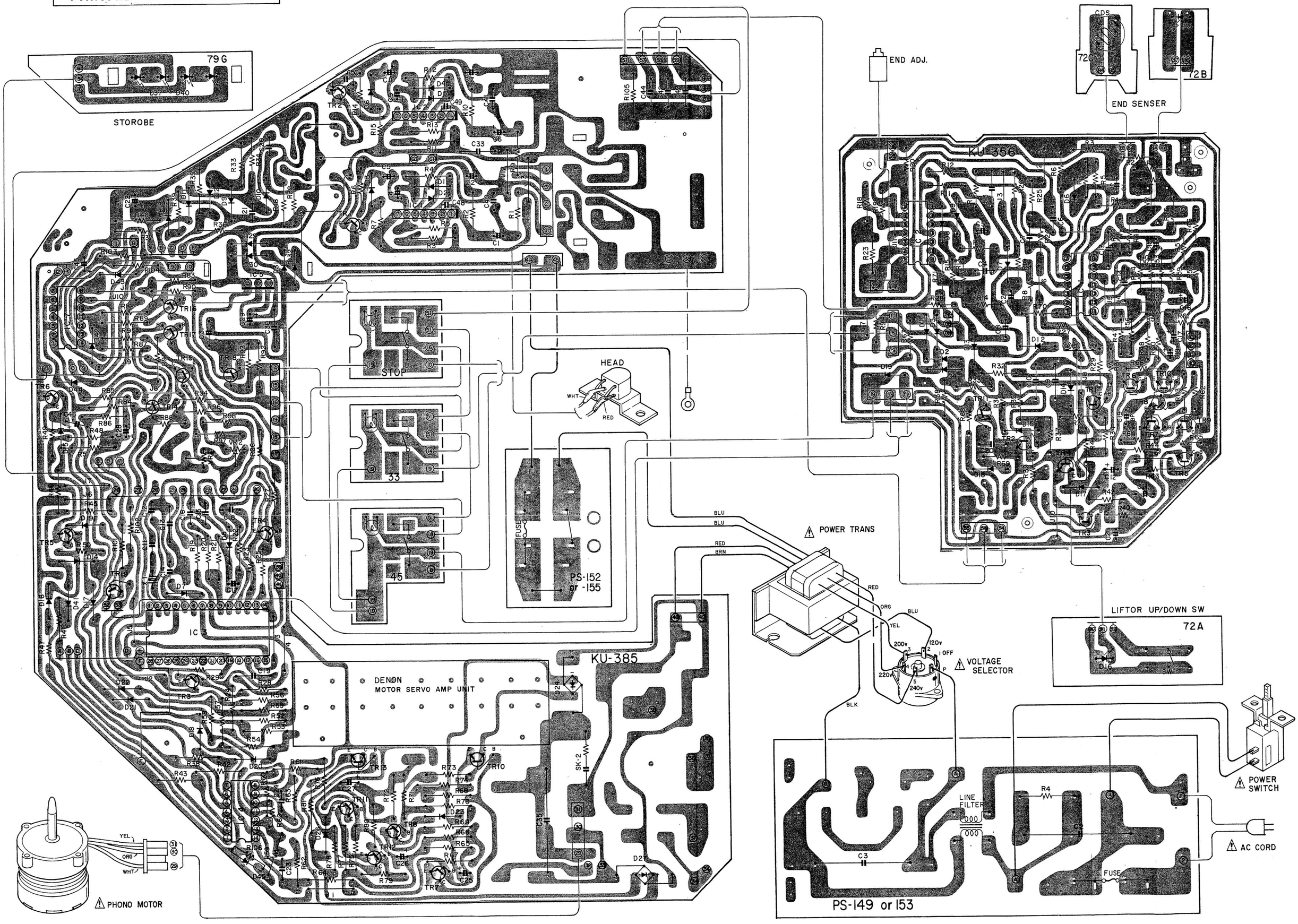

EXPLODED VIEW OF MAIN PARTS

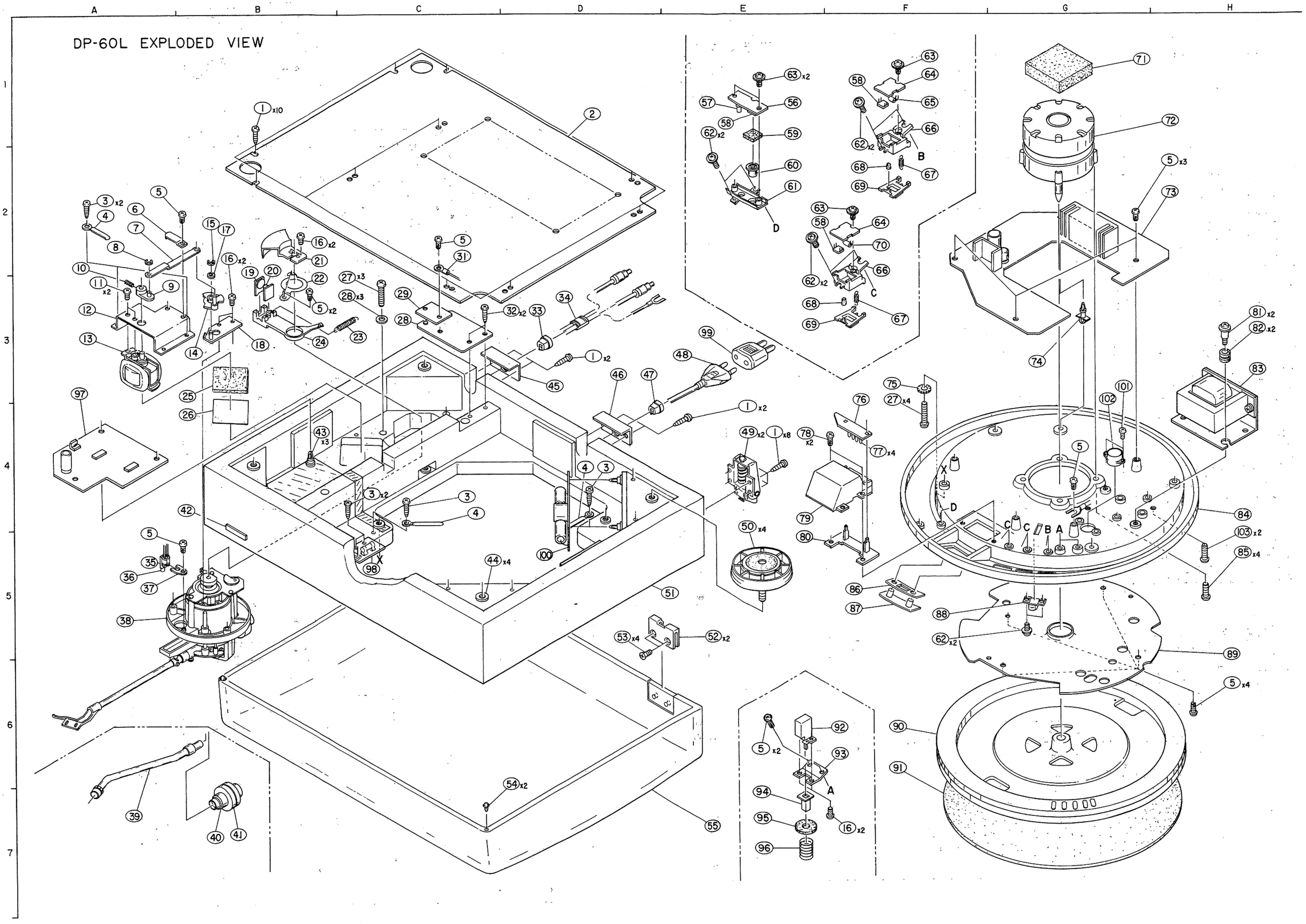

PARTS LIST OF EXPLODED VIEW

Ref. No.	Part No.	Part Name	Remarks
1	4733309032	3x16 CBTS (1)	
2	1058053118	BOTTOM PLATE	
3	4730406019	3x12	
4	EP-4772	CORD HOLDER	
5	4733800010	3x8 CBTS	
6	4128212103	GUIDE PLATE	
7	4358014100	CONNECTION PLATE	
8	4761001002	2 E-RING	
9	4218121104	MOTOR ARM	
10	4744200007	3x3 BSS	
11	4730812001	3x8 CBTS	
12	4128211104	MOTOR BRACKET	
13	2178035109	MOTOR (C)	
14	4248010007	COM (A)	
15	4761003009	3E-RING	
16	4713303016	3x6 CBS	
17	4770090058	WASHER	
18	4128209200	CAM BASE ASS'Y	
19	3939019101	CDS	
20	3939023003	LED (SEL 101W)	
21	4118141103	SHUTTER	
22	4418213003	PUSH PLATE	
23	4638212004	SPRING	
24	4218115408	SENSER HOLDER	
25	4618087107	SPACER	
26	4418323100	M. SHIELD PLATE	
27	4713411018	4x25 CBS	
28	4751005005	4W	
29	KU-356	PHONE WIRE P.C. BOARD	A Part of KU-356
30	4128213005	SHIELD BRACKET	
31	2098048030	TERMINAL WIRE	
32	4730309019	3x16 CBRTS (1)	
33	4458024003	CORD BUSH	
34	2039616007	OUTPUT CORD	
35	2078007020	LED SOCKET WITH WIRE	
36	3939078003	LED (LN222RP)	
37	4128214208	LED SUPPORTER	
38	FPU-990	TONE ARM UNIT	
39	3158414105	PIPE ARM ASS.	
40	3158417102	WEIGHT SLEEVE ASS.	
41	3158531004	WEIGHT RING ASS.	
42	FPR0464-1	DENON MARK	
43	4498041004	C.B. LOCKING SUPPORT	
44	FSC0102	SPECIAL NUT (A)	
45	4418584004	BUSHING PLATE (H)	
⚠ 46	4418551008	BUSHING PLATE (F)	Canadian model
"	4418552007	BUSHING PLATE (G)	Other models
⚠ 47	MD-2982H	BUSHING	Australian model
"	MD-3802	BUSHING	Canadian model
"	4450020005	BUSHING	Other models
⚠ 48	2006019307	AC POWER CORD	Australian model
"	2062019008	AC POWER CORD	Canadian model
"	2062026006	AC POWER CORD	UK. model
"	2062002031	AC POWER CORD	Other models
49	4018027000	HINGE	
50	1048024403	INSULATOR	
51	1018228200	CABINET SUB ASS'Y	
52	FTS0701	HINGE PLATE	
53	4712404055	4x8 CFS	
54	4628006107	BUSHING	

Ref. No.	Part No.	Part Name	Remarks
55	1468120000	DUST COVER ASS'Y	
56	KU-356	LIFTER SWITCH P.C. Board	A part of KU-356
57	3939079002	LED (LN322GP)	
58	2129059008	PUSH SWITCH	
59	4618086108	KNOB CUSHION	
60	1138103302	LIFT SW. KNOB	
61	4498040209	LIFT SW. HOLDER	
62	4700010011	3x8 CPS W	
63	4700026005	3x8 CBRTS W	
64	KU-390	SWITCH UNIT	
65	3930047046	PILOT LAMP (WHITE)	
66	4498037102	SW. HOLDER	
67	4638009000	2F. COIL SPRING	
68	1298014108	BUTTON CUSHION	
69	1138101100	PUSH BUTTON	
70	3930047033	PILOT LAMP (GREEN)	
71	4618067004	PAD	
⚠ 72	2178018210	MOTOR	
73	KU-385	MOTOR SERVO AMP UNIT	
74	4498046009	C.B.L. SUPPORT	
75	4753202009	4-TW	
76	KU-385	STOREBE LED P.C. BOARD	A part of KU-385.
77	3939041001	LED	
78	4733800023	3x10 CBRTS	
79	1468058208	MIRROR CASE ASS.	
80	4498038004	LED. HOLDER	
81	4770192008	SPECIAL SCREW	
82	4620027003	RUBBER BUSH	
⚠ 83	2339037205	POWER TRANS	
84	4468076106	MOTOR BOARD ASS'Y	
85	4713406010	4x12 CBS	
86	4148022001	BLIND	
87	1468051001	STROBO WINDOW	
88	3918425004	MAGNETIC HEAD ASS.	
89	4148126004	SHIELD PLATE	Multi-voltage model
"	4148102109	SHIELD PLATE	Other models
90	4218074206	RECORDED TURNTABLE	
91	4218094040	RUBBER SHEET	
⚠ 92	2129136028	POWER SWITCH	Canadian model
"	2129136015	POWER SWITCH	Other models
93	4418532108	PUSH SW. BRACKET	
94	1138100101	PUSH KNOB	
95	4618094006	CUSHION	
96	4638606005	SPRING	
97	KU-356	ARM SERVO AMP UNIT	
⚠ 98	PS-155	FUSE UNIT	Canadian model
"	PS-152	FUSE UNIT	Other models
99	2033902005	PLUG ADAPTOR	Multi-voltage model only
⚠ 100	PS-153	POWER SUPPLY UNIT	Canadian model
"	PS-149	POWER SUPPLY UNIT	Other models
101	4713203019	2.6x6 CBS	
⚠ 102	2123315010	VOLTAGE SELECTOR	
103	4770031020	4x20 CBS (R)	

⚠ WARNING: Shaded parts are important to SAFETY. Replace always with same type, same rating.

DENON

MAIN SPECIFICATIONS

• Phono motor

Drive system: Direct drive AC motor
Speeds: 33-1/3 rpm, 45 rpm.
Wow and flutter: 0.015% wrms (see note)
S/N: More than 78dB (DIN-B)
Rise time: Less than 2.0 sec. (33-1/3 rpm)
Platter: Diecast aluminum 300 mm diam Moment of inertia, 200 kg-cm^2 (0.2Nm^2) Including turntable mat
Motor: AC servo motor
Speed control system: Speed servo control by frequency detection system combined with phase control system with reference to quartz crystal oscillator.
Load influence: 0% at out-most groove with stylus force of 100 g (0.98 N)
Speed deviation: Less than 0.002%
Brake system: Electronic brake

NOTE:
Measured by DENON's method using magnetic pulse wheel.

• General

Power supply: Rated voltage and frequency are shown on the rating label at the back of cabinet and/or on the label attached to the power supply cord.
Power consumption: Approx. 18 W
Dimensions: 485Wx180Hx410D mm (Dust cover closed)
Weight: Approx. 13 kg

* All specifications and outward appearance are subject to alteration for improvement without notice.

• Tonearm

Type: Static balance type with vibration damping (Replaceable tonearm tube)
Effective length: 244 mm
Overhang: 14 mm
Tracking error: Less than 2.5°
Tracking force range: 0~2.5g/rot.(1 division is 0.1g) 0~25mN/rot. (1 division is 1mN)
Acceptable weight of cartridge: Approx. 4g to 10g (Including screws and nuts when mounted on straight arm tube) Approx. 12g to 18g (Including head shell, screws and nuts when mounted on S-shaped tonearm tube)
Head shell connector: Standard type 4P (On S-shaped tonearm tube)
Arm height adj. range: Approx. 5mm
Output cord: Low capacitance cord
Facilities provided: Anti-skating device and Automatic arm lift mechanism
Tonearm lifter: Servo-controlled by angular control motor

Change the rated frequency
The DP-60L can be used compatibly on power supply frequencies of 50Hz and 60Hz.

NIPPON COLUMBIA CO., LTD.
No. 14-14, AKASAKA 4-CHOME
MANATO-KU, TOKYO, JAPAN
TEL: 03-584-8111
TELEX: JAPANOLA J22591
CABLE: NIPPON COLUMBIA TOKYO

7503-054
81.1 Printed in Japan